This is a digital copy of a book that was preserved for generations on library shelves before it was carefully scanned by Google as part of a project to make the world's books discoverable online.

It has survived long enough for the copyright to expire and the book to enter the public domain. A public domain book is one that was never subject to copyright or whose legal copyright term has expired. Whether a book is in the public domain may vary country to country. Public domain books are our gateways to the past, representing a wealth of history, culture and knowledge that's often difficult to discover.

Marks, notations and other marginalia present in the original volume will appear in this file - a reminder of this book's long journey from the publisher to a library and finally to you.

Usage guidelines

Google is proud to partner with libraries to digitize public domain materials and make them widely accessible. Public domain books belong to the public and we are merely their custodians. Nevertheless, this work is expensive, so in order to keep providing this resource, we have taken steps to prevent abuse by commercial parties, including placing technical restrictions on automated querying.

We also ask that you:

+ *Make non-commercial use of the files* We designed Google Book Search for use by individuals, and we request that you use these files for personal, non-commercial purposes.
+ *Refrain from automated querying* Do not send automated queries of any sort to Google's system: If you are conducting research on machine translation, optical character recognition or other areas where access to a large amount of text is helpful, please contact us. We encourage the use of public domain materials for these purposes and may be able to help.
+ *Maintain attribution* The Google "watermark" you see on each file is essential for informing people about this project and helping them find additional materials through Google Book Search. Please do not remove it.
+ *Keep it legal* Whatever your use, remember that you are responsible for ensuring that what you are doing is legal. Do not assume that just because we believe a book is in the public domain for users in the United States, that the work is also in the public domain for users in other countries. Whether a book is still in copyright varies from country to country, and we can't offer guidance on whether any specific use of any specific book is allowed. Please do not assume that a book's appearance in Google Book Search means it can be used in any manner anywhere in the world. Copyright infringement liability can be quite severe.

About Google Book Search

Google's mission is to organize the world's information and to make it universally accessible and useful. Google Book Search helps readers discover the world's books while helping authors and publishers reach new audiences. You can search through the full text of this book on the web at `http://books.google.com/`

Figure 1

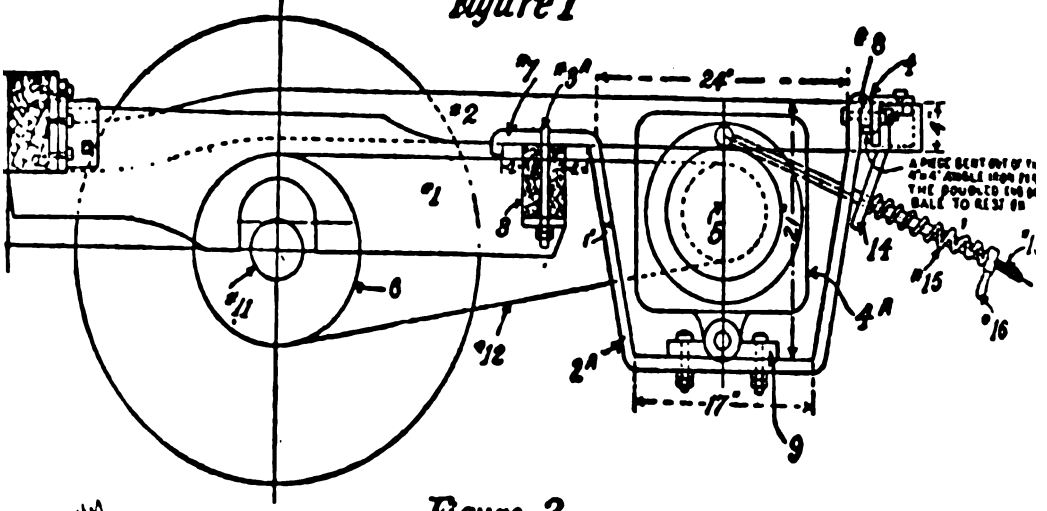

Figure 2.

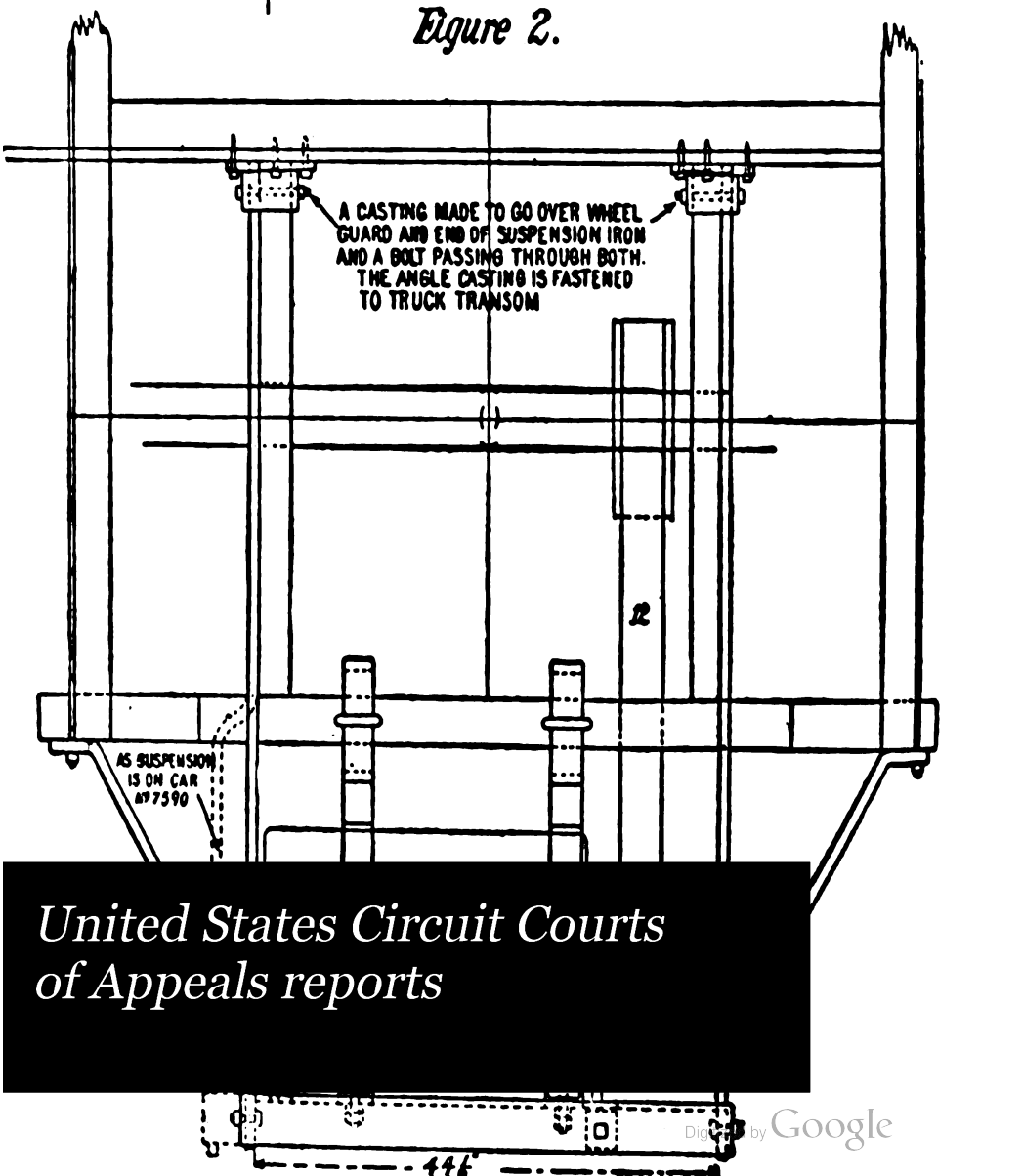

United States Circuit Courts of Appeals reports

Digitized by Google

HARVARD LAW SCHOOL
LIBRARY

Digitized by Google

Digitized by Google

Digitized by Google

88

June 21

UNITED STATES CIRCUIT COURTS OF APPEALS REPORTS

WITH ANNOTATIONS

WITH TABLE OF CASES IN THE UNITED STATES CIRCUIT COURTS OF APPEALS WHICH HAVE BEEN PASSED UPON BY THE SUPREME COURT OF THE UNITED STATES, AND TABLE OF CASES IN THE UNITED STATES CIRCUIT COURTS OF APPEALS IN WHICH REHEARINGS HAVE BEEN GRANTED OR DENIED.

160-161 F.

VOLUME 88

LAWYERS' CO-OPERATIVE PUBLISHING CO.
ROCHESTER
1909

Digitized by Google

COPYRIGHT, 1909,
BY
LAWYERS' CO-OPERATIVE PUBLISHING CO.

(88 C.C.A.)

OCT 1 1909

Digitized by Google

JUDGES

OF THE

UNITED STATES CIRCUIT COURTS OF APPEALS AND THE CIRCUIT AND DISTRICT COURTS.

FIRST CIRCUIT.

Hon. OLIVER WENDELL HOLMES, Circuit Justice.....Washington, D. C.
Hon. LE BARON B. COLT, Circuit Judge.....Providence, R. I.
Hon. WILLIAM L. PUTNAM, Circuit Judge.....Portland, Me.
Hon. FRANCIS C. LOWELL, Circuit Judge.....Boston, Mass.
Hon. CLARENCE HALE, District Judge, Maine.....Portland, Me.
Hon. FREDERIC DODGE, District Judge, Massachusetts.....Boston, Mass.
Hon. EDGAR ALDRICH, District Judge, New Hampshire.....Littleton, N. H.
Hon. ARTHUR L. BROWN, District Judge, Rhode Island.....Providence, R. I.

SECOND CIRCUIT.

Hon. RUFUS W. PECKHAM, Circuit Justice.....Washington, D. C.
Hon. E. HENRY LACOMBE, Circuit Judge.....New York, N. Y.
Hon. ALFRED C. COXE, Circuit Judge.....Utica, N. Y.
Hon. HENRY G. WARD, Circuit Judge.....New York, N. Y.
Hon. WALTER C. NOYES, Circuit Judge .....New London, Conn.
Hon. JAMES P. PLATT, District Judge, Connecticut.....Hartford, Conn.
Hon. THOMAS I. CHATFIELD, District Judge, E. D. New York.....Brooklyn, N. Y.
Hon. GEORGE W. RAY, District Judge, N. D. New York.....Norwich, N. Y.
Hon. GEORGE B. ADAMS, District Judge, S. D. New York.....New York, N. Y.
Hon. GEORGE C. HOLT, District Judge, S. D. New York.....New York, N. Y.
Hon. CHARLES M. HOUGH, District Judge, S. D. New York.....New York, N. Y.
Hon. JOHN R. HAZEL, District Judge, W. D. New York.....Buffalo, N. Y.
Hon. JAMES L. MARTIN, District Judge, Vermont.....Brattleboro, Vt.

THIRD CIRCUIT.

Hon. WILLIAM H. MOODY, Circuit Justice.....Washington, D. C.
Hon. GEORGE M. DALLAS, Circuit Judge.....Philadelphia, Pa.
Hon. GEORGE GRAY, Circuit Judge.....Wilmington, Del.
Hon. JOSEPH BUFFINGTON, Circuit Judge.....Pittsburgh, Pa.
Hon. EDWARD G. BRADFORD, District Judge, Delaware.....Wilmington, Del.
Hon. WILLIAM M. LANNING, District Judge, New Jersey.....Trenton, N. J.
Hon. JOSEPH CROSS, District Judge, New Jersey .....Elizabeth, N. J.
Hon. JOHN B. McPHERSON, District Judge, E. D. Pennsylvania.....Philadelphia, Pa.

Digitized by Google

Hon. JAMES B. HOLLAND, District Judge, E. D. Pennsylvania.....Philadelphia, Pa.
Hon. ROBERT WODROW ARCHBALD, District Judge, M. D. Pennsylvania..Scranton, Pa.
Hon. JAMES S. YOUNG, District Judge, W. D. Pennsylvania .....Pittsburgh, Pa.

FOURTH CIRCUIT.

Hon. MELVILLE W. FULLER, Circuit Justice.....Washington, D. C.
Hon. NATHAN GOFF, Circuit Judge.....Clarksburg, W. Va.
Hon. JETER C. PRITCHARD, Circuit Judge.....Asheville, N. C.
Hon. THOMAS J. MORRIS, District Judge, Maryland.....Baltimore, Md.
Hon. THOMAS R. PURNELL, District Judge, E. D. North Carolina.....Raleigh, N. C.
Hon. JAMES E. BOYD, District Judge, W. D. North Carolina.....Greensboro, N. C.
Hon. WILLIAM H. BRAWLEY, District Judge, E. and W. D. South Car..Charleston, S. C.
Hon. EDMUND WADDILL, Jr., District Judge, E. D. Virginia.....Richmond, Va.
Hon. HENRY CLAY McDOWELL, District Judge, W. D. Virginia.....Lynchburg, Va.
Hon. ALSTON G. DAYTON, District Judge, N. D. West Virginia.....Philippi, W. Va.
Hon. BENJAMIN F. KELLER, District Judge, S. D. West Virginia.....Bramwell, W. Va.

FIFTH CIRCUIT.

Hon. EDWARD D. WHITE, Circuit Justice.....Washington, D. C.
Hon. DON A. PARDEE, Circuit Judge.....Atlanta, Ga.
Hon. A. P. McCORMICK, Circuit Judge.....Dallas, Tex.
Hon. DAVID D. SHELBY, Circuit Judge.....Huntsville, Ala.
Hon. THOMAS G. JONES, District Judge, N. and M. D. Alabama....Montgomery, Ala.
Hon. OSCAR R. HUNDLEY, District Judge, N. D. Alabama.....Birmingham, Ala.
Hon. HARRY T. TOULMIN, District Judge, S. D. Alabama.....Mobile, Ala.
Hon. WM. B. SHEPPARD, District Judge, N. D. Florida .....Pensacola, Fla.
Hon. JAMES W. LOCKE, District Judge, S. D. Florida.....Jacksonville, Fla.
Hon. WILLIAM T. NEWMAN, District Judge, N. D. Georgia.....Atlanta, Ga.
Hon. EMORY SPEER, District Judge, S. D. Georgia.....Macon, Ga.
Hon. EUGENE D. SAUNDERS, District Judge, E. D. Louisiana.....New Orleans, La.
Hon. ALECK BOARMAN, District Judge, W. D. Louisiana.....Shreveport, La.
Hon. HENRY C. NILES, District Judge, N. and S. D. Mississippi.....Kosciusko, Miss.
Hon. DAVID E. BRYANT, District Judge, E. D. Texas.....Sherman, Tex.
Hon. EDWARD R. MEEK, District Judge, N. D. Texas.....Dallas, Tex.
Hon. WALLER T. BURNS, District Judge, S. D. Texas.....Houston, Tex.
Hon. THOMAS S. MAXEY, District Judge, W. D. Texas.....Austin, Tex.

SIXTH CIRCUIT.

Hon. JOHN M. HARLAN, Circuit Justice.....Washington, D. C.
Hon. HORACE H. LURTON, Circuit Judge.....Nashville, Tenn.
Hon. HENRY F. SEVERENS, Circuit Judge.....Kalamazoo, Mich.
Hon. JOHN K. RICHARDS, Circuit Judge..... .....Cincinnati, Ohio.
Hon. ANDREW M. J. COCHRAN, District Judge, E. D. Kentucky.....Maysville, Ky.
Hon. WALTER EVANS, District Judge, W. D. Kentucky.....Louisville, Ky.
Hon. HENRY H. SWAN, District Judge, E. D. Michigan.....Detroit, Mich.
Hon. LOYAL E. KNAPPEN, District Judge, W. D. Michigan.....Grand Rapids, Mich.
Hon. ROBERT W. TAYLER, District Judge, N. D. Ohio.....Cleveland, Ohio.
Hon. ALBERT C. THOMPSON, District Judge, S. D. Ohio.....Cincinnati, Ohio.
Hon. JOHN E. SATER, District Judge, S. D. Ohio.....Columbus, Ohio.
Hon. EDWARD T. SANFORD, District Judge, E. and M. D. Tennessee ..Knoxville, Tenn.
Hon. JOHN E. McCALL, District Judge, W. D. Tennessee.....Memphis, Tenn.

Digitized by Google

SEVENTH CIRCUIT.

Hon. WILLIAM R. DAY, Circuit Justice.....Washington, D. C.
Hon. PETER S. GROSSCUP, Circuit Judge.....Chicago, Ill.
Hon. FRANCIS E. BAKER, Circuit Judge.....Indianapolis, Ind.
Hon. WILLIAM H. SEAMAN, Circuit Judge.....Sheboygan, Wis.
Hon. CHRISTIAN C. KOHLSAAT, Circuit Judge.....Chicago, Ill.
Hon. KENESAW M. LANDIS, District Judge, N. D. Illinois.....Chicago, Ill.
Hon. SOLOMON H. BETHEA, District Judge, N. D. Illinois.....Chicago, Ill.
Hon. FRANCIS M. WRIGHT, District Judge, E. D. Illinois.....Urbana, Ill.
Hon. J. OTIS HUMPHREY, District Judge, S. D. Illinois.....Springfield, Ill.
Hon. ALBERT B. ANDERSON, District Judge, Indiana.....Indianapolis, Ind.
Hon. JOSEPH V. QUARLES, District Judge, E. D. Wisconsin.....Milwaukee, Wis.
Hon. ARTHUR L. SANBORN, District Judge, W. D. Wisconsin.....Madison, Wis.

EIGHTH CIRCUIT.

Hon. DAVID J. BREWER, Circuit Justice.....Washington, D. C.
Hon. WALTER H. SANBORN, Circuit Judge.....St. Paul, Minn.
Hon. WILLIS VAN DEVANTER, Circuit Judge.....Cheyenne, Wyo.
Hon. WILLIAM C. HOOK, Circuit Judge.....Leavenworth, Kan.
Hon. ELMER B. ADAMS, Circuit Judge.....St. Louis, Mo.
Hon. JACOB TRIEBER, District Judge, E. D. Arkansas.....Little Rock, Ark.
Hon. JOHN H. ROGERS, District Judge, W. D. Arkansas.....Ft. Smith, Ark.
Hon. ROBERT E. LEWIS, District Judge, Colorado.....Denver, Colo.
Hon. HENRY THOMAS REED, District Judge, N. D. Iowa.....Cresco, Iowa.
Hon. SMITH McPHERSON, District Judge, S. D. Iowa.....Red Oak, Iowa
Hon. JOHN C. POLLOCK, District Judge, Kansas.....Topeka, Kan.
Hon. MILTON D. PURDY, District Judge, Minnesota[1].....Minneapolis, Minn.
Hon. PAGE MORRIS, District Judge, Minnesota.....Duluth, Minn.
Hon. DAVID P. DYER, District Judge, E. D. Missouri.....St. Louis, Mo.
Hon. JOHN F. PHILIPS, District Judge, W. D. Missouri.....Kansas City, Mo.
Hon. W. H. MUNGER, District Judge, Nebraska.....Omaha, Neb.
Hon. THOMAS C. MUNGER, District Judge, Nebraska.....Lincoln, Neb.
Hon. CHARLES F. AMIDON, District Judge, North Dakota.....Fargo, N. D.
Hon. RALPH E. CAMPBELL, District Judge, E. Oklahoma.....Muskogee, Okl.
Hon. JOHN H. COTTERAL, District Judge, W. Oklahoma.....Guthrie, Okl.
Hon. JOHN E. CARLAND, District Judge, South Dakota.....Sioux Falls, S. D.
Hon. JOHN A. MARSHALL, District Judge, Utah.....Salt Lake City, Utah.
Hon. JOHN A. RINER, District Judge, Wyoming.....Cheyenne, Wyo.

NINTH CIRCUIT.

Hon. JOSEPH McKENNA, Circuit Justice.....Washington, D. C.
Hon. WILLIAM B. GILBERT, Circuit Judge.....Portland, Or.
Hon. WM. W. MORROW, Circuit Judge.....San Francisco, Cal.
Hon. ERSKINE M. ROSS, Circuit Judge.....Los Angeles, Cal.
Hon. WM. C. VAN FLEET, District Judge, N. D. California.....San Francisco, Cal.
Hon. JOHN J. DE HAVEN, District Judge, N. D. California.....San Francisco, Cal.
Hon. OLIN WELLBORN, District Judge, S. D. California.....Los Angeles, Cal.
Hon FRANK S. DIETRICH, District Judge, Idaho.....Boise, Idaho.
Hon. WILLIAM H. HUNT, District Judge, Montana.....Helena, Mont.
Hon. EDWARD S. FARRINGTON, District Judge, Nevada.....Carson City, Nev.
Hon. CHARLES H. WOLVERTON, District Judge, Oregon.....Portland, Or.
Hon. EDWARD WHITSON, District Judge, E. D. Washington.....Spokane, Wash.
Hon. CORNELIUS H. HANFORD, District Judge, W. D. Washington.....Seattle, Wash.

[1] Appointed July 6, 1908, to succeed Lochren, District Judge.

Digitized by Google

Digitized by Google

CASES REPORTED.

Page

Adams & Westlake Co., Consolidated R. Electric Lighting & Equipment Co. v. 355
Alligator, The..... 201
Alligrippus, The..... 201
American Lead & Baryta Co., Blount v..... 574
American Loom Co., Draper Co. v. 588
Anderson v. Newhall..... 511
Armour & Co. v. Kollmeyer..... 242
Auchincloss, Constantine & Pickering S. S. Co. v. (two cases).. 661
Auchincloss, McLean v..... 661

Babcock v. De Mott..... 64
Baker & Hamilton, Holmes v.... 104
Ballantine v. Ballantine..... 109
Bamberger, McCoach v..... 254
Barrett, The Henry O..... 423
Bartleson, Feidler v..... 194
Beard, The Edith..... 265
Bencliff, The..... 514
Bidwell v. Preston..... 19
Blount v. American Lead & Baryta Co..... 574
Boatright v. Waters..... 633
Borden's Condensed Milk Co. v. Louisiana Purchase Exposition Co. 101
Brady, Union Pac. R. Co. v..... 579
Bray v. Monongahela River Consol. Coal & Coke Co..... 323
B. Roth Tool Co. v. New Amsterdam Casualty Co..... 569
Brown, Western Transit Co. v... 617

Cæsar, United States Fastener Co. v..... 162
California Development Co., Holt v..... 167
Campbell v. Weyerhaeuser..... 412
Canadian Imp. Co. v. Cooper... 325
Canadian Pac. R. Co., Elliott v... 286
Cargo of Lumber, Watt v..... 268
Cascaden v. Wimbish..... 277
Chanler v. Sherman..... 673

Page

Chanler v. Town Topics Pub. Co. 269
Chase, Talbot & Co., Roney v... 389
Chicago Great Western R. Co. v. McDonough 517
Chicago, R. I. & P. R. Co., Davis v..... 488
Christy v. Schwartzchild & Sulzberger Co..... 125
Cincinnati, N. O. & T. P. R. Co. v. Davis..... 414
Clay v. Waters..... 633
Cleage, United States v..... 249
Cobb v. Crittenden..... 452
Collier, Missouri, K. & T. R. Co. v. 127
Columbia Canning Co. v. Hampton 224
Congdon, Kraus v..... 182
Conklin v. R. P. & J. H. Staats Co. 596
Conrad Inv. Co. v. United States 647
Consolidated R. Electric Lighting & Equipment Co. v. Adams & Westlake Co..... 355
Constantine & Pickering S. S. Co. v. Auchincloss (two cases).... 661
Cooper, Canadian Imp. Co. v.... 325
Crittenden, Cobb v..... 452
C. W. Morse, The..... 665

D'Arcy, Murray v..... 364
D'Arcy v. Staples & Hanford Co. 606
Davis v. Chicago, R. I. & P. R. Co. 488
Davis, Cincinnati, N. O. & T. P. R. Co. v..... 414
Delaware Seamless Tube Co. v. Shelby Steel Tube Co..... 110
Delaware & H. Co. v. Larnard.. 462
Demarest v. Dunton Lumber Co. 310
De Mott, Babcock v..... 64
Development Co. of America v. King 255
Dey Time Register Co. v. Syracuse Time-Recorder Co..... 275
Dodge, Frank Waterhouse & Co. v. 374

Digitized by Google

Page
Dodge Metallic Cap Co., Weissenthanner v. 388
Dollar, The Grace 88
Dollar, The Robert 58
Dollar, The Stanley 93
Downie, National Bank of Commerce of Seattle v. (two cases) 657
Downie, Seattle Nat. Bank v. (two cases) 657
Drane, Sloss-Sheffield Steel & Iron Co. v. 34
Draper Co. v. American Loom Co. 588
Dunton Lumber Co., Demarest v. 310
Duryea Power Co., Sternbergh v. 482

Edith Beard, The 265
Electro Dental Mfg. Co., Pieper v. 112
Elliott v. Canadian Pac. R. Co. .. 286
Equitable Life Assur. Soc., Levy v. 329

Fairbanks, Morse & Co. v. Walker 78
Fairmont Coal Co., Merchants' Coal Co. v. 23
Faulkner, In re 505
Federal Lead Co. v. Swyers 547
Federal Sugar Refining Co. of Yonkers, Milburn v. 577
Feidler v. Bartleson 194
Fishback v. Fond Du Lac & N. E. R. Co. 367
567,000 Gallons of Molasses, Vaccarezzo v. 485
Fond Du Lac & N. E. R. Co., Fishback v. 367
Frank Waterhouse & Co. v. Dodge 374
Friedman, In re 306

Gaddie, Mann v. 1
Gaines & Co., Kahn v. 437
General Acc. Ins. Co. of Philadelphia, Wood v. 108
Gilson, People's United States Bank v. 332
Goldstone, Hellman v. 604
Gormley & Jeffery Tire Co. v. Pennsylvania Rubber Co. 417
Grace Dollar, The 88
Graham v. Oregon R. & Nav. Co. 308
Grand Trunk Western R. Co. v. Reddick 80
Gray v. Northwestern Nat. Life Ins. Co. of Minneapolis, Minn. 430
Great Falls Nat. Bank v. McClure 220
Griffin v. International Trust Co. 212

Page
Gulf, C. & S. F. R. Co. v. Moseley 236
G. & C. Merriam Co. v. Ogilvie .. 596

Haggin, Reader v. 91
Hampton, Columbia Canning Co. v. 224
Heidel, Mutual Reserve Life Ins. Co. v. 477
Hellman v. Goldstone 604
Henry O. Barrett, The 423
Holmes v. Baker & Hamilton 104
Holt v. California Development Co. 167
Hopkins, Southern R. Co. v. 312
Horsley Line, Samuel v. 514
Hoyt v. Weyerhaeuser 404

Indiana & Arkansas Lumber & Mfg. Co. v. Milburn 473
International Trust Co., Griffin v. 212

Jacobs v. United States 554
James McCaulley, The 423
Jefferson County, Pauly Jail Bldg. & Mfg. Co. v. 48
J. F. Rowley Co., Rowley v. 258
Johanson v. White 83

Kahn v. W. A. Gaines & Co. 437
King, Development Co. of America v. 255
Kollmeyer, Armour & Co. v. 242
Kraft, United States Exp. Co. v. 346
Krakowski v. United States 252
Kraus v. Congdon 182

Lake v. Shenango Furnace Co. .. 69
Larnard, Delaware & H. Co. v. .. 462
Larussi, Missouri Pac. R. Co. v. .. 230
Leary v. Talbot 96
Leon Rheims Co. v. United States 107
Levy v. Equitable Life Assur. Soc. 329
Louisiana Purchase Exposition Co., Borden's Condensed Milk Co. v. 101
L. Rudnick & Co., In re 85

McCaulley, The James 423
McClure, Great Falls Nat. Bank v. 220
McCoach v. Bamberger 254
McCrea, In re 282
McDonough, Chicago Great Western R. Co. v. 517

Digitized by Google

Page
McFadgen, Vollmer v. 605
McGuire, Standard Steel Car Co. v. 469
McLean v. Auchincloss 661
McMullen, O'Rourke Engineering Const. Co. v. 115
Mann v. Gaddie 1
Merchants' Coal Co. v. Fairmont Coal Co. 23
Merchants' Savings & Trust Co. of Pittsburg, Sloan v. 20
Merriam Co. v. Ogilvie 596
Merriam, United States v. 349
Milburn v. Federal Sugar Refining Co. of Yonkers 577
Milburn, Indiana & Arkansas Lumber & Mfg. Co. v. 473
Miller, Du Brul & Peters Mfg. Co., Sternberg Mfg. Co. v. 398
Missouri, K. & T. R. Co. v. Collier 127
Missouri, K. & T. R. Co., Wollington v. 573
Missouri Pac. R. Co. v. Larussi 230
Monongahela River Consol. Coal & Coke Co., Bray v. 323
Monterey, The 259
Moore, United States v. 455
Morris v. United States 532
Morse, The C. W. 665
Morse Dry Dock & Repair Co. v. Seaboard Transp. Co. 263
Moseley, Gulf, C. & S. F. R. Co. v. 236
Mundy v. Shellaberger 445
Murray v. D'Arcy 364
Mutual Reserve Life Ins. Co. v. Heidel 477

National Bank of Commerce of Seattle v. Downie (two cases) 657
National Life & Trust Co., Watson v. 380
National Water Co., O'Connell v. 487
New Amsterdam Casualty Co., B. Roth Tool Co. v. 569
Newhall, Anderson v. 511
New Liverpool Salt Co. v. Wellborn 105
Nickell v. United States 562
Northwestern Nat. Life Ins. Co. of Minneapolis, Minn., v. Gray 430
No. 4, The 665

O'Connell v. National Water Co. 487
Ogilvie, G. & C. Merriam Co. v. ... 596
Oregon R. & Nav. Co., Graham v. 308
O'Rourke Engineering Const. Co. v. McMullen 115

Pauly Jail Bldg. & Mfg. Co. v. Jefferson County 48
Pennsylvania Co. v. Scofield 602
Pennsylvania Rubber Co., Gormley & Jeffery Tire Co. v. 417
People's United States Bank v. Gilson 332
Phœnix, The 201
Pieper v. Electro Dental Mfg. Co. 112
Pollock v. Riddick 326
Preston, Bidwell v. 19

Rainbow v. Young 653
Reader v. Haggin 91
Reddick, Grand Trunk Western R. Co. v. 80
Resolute, The 17
Rheims Co. v. United States 107
Rice, Third Nat. Bank of St. Louis v. 640
Riddick, Pollock v. 326
Robert Dollar, The 58
Roney v. Chase, Talbot & Co. 389
Roth Tool Co. v. New Amsterdam Casualty Co. 569
Rowley Co., Rowley v. 258
Rowley v. J. F. Rowley Co. 258
R. P. & J. H. Staats Co., Conklin v. 593
Rudnick & Co., In re 85
Rygja, The 270

St. Louis Southwestern R. Co., Springer v. 619
St. Louis Street Flushing Mach. Co. v. Sanitary Street Flushing Mach. Co. 585
Samuel v. Horsley Line 514
Sanitary Street Flushing Mach. Co., St. Louis Street Flushing Mach. Co. v. 585
Schodde v. Twin Falls Land & Water Co. 207
Schwartzchild & Sulzberger Co., Christy v. 125
Scofield, Pennsylvania Co. v. 602
Seaboard Transp. Co., Morse Dry Dock & Repair Co. v. 263
Seattle Nat. Bank v. Downie (two cases) 657
Shannon v. United States 52

Digitized by Google

Page
Shelby Steel Tube Co., Delaware Seamless Tube Co. v. 110
Shellaberger, Mundy v. 445
Shenango Furnace Co., Lake v. .. 69
Sherman, Chanler v. 673
Sloan v. Merchants' Savings & Trust Co. of Pittsburg 20
Sloss-Sheffield Steel & Iron Co. v. Drane 34
Smith v. United States Fidelity & Guaranty Co. 669
Southern R. Co. v. Hopkins 312
Southern R. Co. v. Townsend 390
Springer v. St. Louis Southwestern R. Co. 619
Staats Co., Conklin v. 593
Standard Steel Car Co. v. McGuire 469
Stanley Dollar, The 93
Staples & Hanford Co., D'Arcy v. 606
Sternbergh v. Duryea Power Co. 482
Sternberg Mfg. Co. v. Miller, Du Brul & Peters Mfg. Co. 398
Strobel, In re 98
Sullivan v. United States 289
Swan v. Wiley, Harker & Camp Co. 510
Swyers, Federal Lead Co. v. 547
Syracuse Time-Recorder Co., Dey Time Register Co. v. 275

Talbot, Leary v. 96
Third Nat. Bank of St. Louis v. Rice 640
Tiger, The 58
Town of Hingham v. United States 341
Townsend, Southern R. Co. v. .. 390
Town Topics Pub. Co., Chanler v. 269
Tremont, The 304
Twin Falls Land & Water Co., Schodde v. 207

Union Pac. R. Co. v. Brady 579
United States, In re 341
United States v. Cleage 249
United States, Conrad Inv. Co. v. 647
United States, Jacobs v. 554
United States, Krakowski v. 252
United States, Leon Rheims Co. v. 107
United States v. Merriam 349
United States v. Moore 455
United States, Morris v. 532
United States, Nickell v. 562
United States, Shannon v. 52
United States, Sullivan v. 289
United States, Town of Hingham v. 341
United States, Wasserman v. 582
United States, Wilcox v. 273
United States, Williams v. 296
United States Exp. Co. v. Kraft 346
United States Fastener Co. v. Cæsar 162
United States Fidelity & Guaranty Co., Smith v. 669

Vaccarezzo v. 567,000 Gallons of Molasses 485
Vollmer v. McFadgen 605

W. A. Gaines & Co., Kahn v. 437
Walker, Fairbanks, Morse & Co. v. 78
Wasserman v. United States 582
Waterhouse & Co. v. Dodge 374
Waters, Boatright v. 633
Waters, Clay v. 633
Watson v. National Life & Trust Co. 380
Watt v. Cargo of Lumber 268
Weissenthanner v. Dodge Metallic Cap Co. 388
Wellborn, New Liverpool Salt Co. v. 105
Western Transit Co. v. Brown .. 617
Weyerhaeuser, Campbell v. 412
Weyerhaeuser, Hoyt v. 404
White, Johanson v. 83
Wilcox v. United States 273
Wiley, Harker & Camp Co., Swan v. 510
Williams v. United States 296
Wimbish, Cascaden v. 277
Winnie, The 265
Wollington v. Missouri, K. & T. R. Co. 573
Wood v. General Acc. Ins. Co. of Philadelphia 108

Young, Rainbow v. 653

Digitized by Google

CASES REPORTED.

ARRANGED UNDER THEIR RESPECTIVE CIRCUITS.

FIRST CIRCUIT.

Page

Draper Co. v. American Loom Co. 588

G. & C. Merriam Co. v. Ogilvie.. 596

Jacobs v. United States..... 554

Merriam Co. v. Ogilvie..... 596

Sullivan v. United States..... 289

Town of Hingham v. United States 341

United States, In re..... 341

SECOND CIRCUIT.

Anderson v. Newhall..... 511

Beard, The Edith..... 265
Bidwell v. Preston..... 19

Canadian Imp. Co. v. Cooper... 325
Chanler v. Sherman..... 673
Chanler v. Town Topics Pub. Co. 269
Constantine & Pickering S. S. Co. v. Auchincloss (two cases).... 661
C. W. Morse, The..... 665

Demarest v. Dunton Lumber Co. 310
Development Co. of America v. King 255
Dey Time Register Co. v. Syracuse Time-Recorder Co..... 275

Edith Beard, The..... 265
Elliott v. Canadian Pac. R. Co... 286

Page

Friedman, In re..... 306

Graham v. Oregon R. & Nav. Co. 308

Krakowski v. United States.... 252

Leary v. Talbot..... 96
Leon Rheims Co. v. United States 107
L. Rudnick & Co., In re..... 85

McCrea, In re..... 282
McLean v. Auchincloss..... 661
Milburn v. Federal Sugar Refining Co. of Yonkers..... 577
Monterey, The..... 259
Morse, The C. W..... 665
Morse Dry Dock & Repair Co. v. Seaboard Transp. Co..... 263

No. 4, The..... 665

O'Rourke Engineering Const. Co. v. McMullen..... 115

Pieper v. Electro Dental Mfg. Co. 112

Reader v. Haggin..... 91
Resolute, The..... 17
Rheims Co. v. United States.... 107
Roney v. Chase, Talbot & Co..... 389
Rudnick & Co., In re..... 85
Rygja, The..... 270

Strobel, In re..... 98
Swan v. Wiley, Harker & Camp Co. 510

United States Fastener Co. v. Cæsar 162

Digitized by Google

Page

Vaccarezzo v. 567,000 Gallons of Molasses 485

Watt v. Cargo of Lumber..... 268
Western Transit Co. v. Brown.. 617
Winnie, The..... 265

THIRD CIRCUIT.

Alligator, The..... 201
Alligrippus, The..... 201

Ballantine v. Ballantine..... 109
Barrett, The Henry O..... 423
Bencliff, The..... 514
Bray v. Monongahela River Consol. Coal & Coke Co..... 323

Cobb v. Crittenden..... 452
Conklin v. R. P. & J. H. Staats Co 593

Delaware Seamless Tube Co. v. Shelby Steel Tube Co..... 110
Delaware & H. Co. v. Larnard.. 462

Gormley & Jeffery Tire Co. v. Pennsylvania Rubber Co..... 417

Hellman v. Goldstone..... 604
Henry O. Barrett, The..... 423

James McCaulley, The..... 423

McCaulley, The James..... 423
McCoach v. Bamberger..... 254

O'Connell v. National Water Co. 487

Pennsylvania Co. v. Scofield.... 602
Phœnix, The..... 201

Rowley v. J. F. Rowley Co..... 258

Samuel v. Horsley Line..... 514
Sloan v. Merchants' Savings & Trust Co. of Pittsburg..... 20
Standard Steel Car Co. v. McGuire 469
Sternbergh v. Duryea Power Co. 482

United States Exp. Co. v. Kraft 346

Vollmer v. McFadgen..... 605

Page

Weissenthanner v. Dodge Metallic Cap Co..... 388
Wood v. General Acc. Ins. Co. of Philadelphia 108

FOURTH CIRCUIT.

Merchants' Coal Co. v. Fairmont Coal Co..... 23

Smith v. United States Fidelity & Guaranty Co..... 669

FIFTH CIRCUIT.

Mann v. Gaddie..... 1

Sloss-Sheffield Steel & Iron Co. v. Drane..... 34
Southern R. Co. v. Hopkins..... 312
Southern R. Co. v. Townsend.... 390

SIXTH CIRCUIT.

Cincinnati, N. O. & T. P. R. Co. v. Davis..... 414

D'Arcy v. Staples & Hanford Co. 606

Levy v. Equitable Life Assur. Soc. 329

Murray v. D'Arcy..... 364

Pollock v. Riddick..... 326

SEVENTH CIRCUIT.

Christy v. Schwartzchild & Sulzberger Co..... 125
Consolidated R. Electric Lighting & Equipment Co. v. Adams & Westlake Co..... 355

Fishback v. Fond Du Lac & N. E. R. Co..... 367

Grand Trunk Western R. Co. v. Reddick 80

Missouri Pac. R. Co. v. Larussi.. 230

Digitized by Google

EIGHTH CIRCUIT.

Page
Armour & Co. v. Kollmeyer..... 242

Babcock v. De Mott..... 64
Blount v. American Lead & Baryta Co..... 574
Boatright v. Waters..... 633
Borden's Condensed Milk Co. v. Louisiana Purchase Exposition Co. 101
B. Roth Tool Co. v. New Amsterdam Casualty Co..... 569

Campbell v. Weyerhaeuser..... 412
Chicago Great Western R. Co. v. McDonough 517
Clay v. Waters..... 633

Davis v. Chicago, R. I. & P. R. Co. 488

Fairbanks, Morse & Co. v. Walker 78
Faulkner, In re..... 505
Federal Lead Co. v. Swyers..... 547

Gray v. Northwestern Nat. Life Ins. Co. of Minneapolis, Minn. 430
Gulf, C. & S. F. R. Co. v. Moseley 236

Hoyt v. Weyerhaeuser..... 404

Indiana & Arkansas Lumber & Mfg. Co. v. Milburn..... 473

Kahn v. W. A. Gaines & Co..... 437

Lake v. Shenango Furnace Co... 69

Missouri, K. & T. R. Co. v. Collier 127
Morris v. United States..... 532
Mundy v. Shellaberger..... 445
Mutual Reserve Life Ins. Co. v. Heidel 477

Northwestern Nat. Life Ins. Co. of Minneapolis, Minn., v. Gray 430

People's United States Bank v. Gilson 332

Rainbow v. Young..... 653
Roth Tool Co. v. New Amsterdam Casualty Co..... 569

Page
St. Louis Street Flushing Mach. Co. v. Sanitary Street Flushing Mach. Co..... 585
Springer v. St. Louis Southwestern R. Co..... 619
Sternberg Mfg. Co. v. Miller, Du Brul & Peters Mfg. Co..... 398

Third Nat. Bank of St. Louis v. Rice 640

Union Pac. R. Co. v. Brady..... 579
United States v. Cleage..... 249

Wasserman v. United States.... 582
Watson v. National Life & Trust Co. 380
Wollington v. Missouri, K. & T. R. Co..... 573
Wilcox v. United States..... 273
Williams v. United States..... 296

NINTH CIRCUIT.

Cascaden v. Wimbish..... 277
Columbia Canning Co. v. Hampton 224
Conrad Inv. Co. v. United States 647

Dollar, The Grace..... 88
Dollar, The Robert..... 58
Dollar, The Stanley..... 93

Feidler v. Bartleson..... 194
Frank Waterhouse & Co. v. Dodge 374

Grace Dollar, The..... 88
Great Falls Nat. Bank v. McClure 220
Griffin v. International Trust Co. 212

Holmes v. Baker & Hamilton... 104
Holt v. California Development Co. 167

Johanson v. White..... 83

Kraus v. Congdon..... 182

National Bank of Commerce of Seattle v. Downie (two cases) 657
New Liverpool Salt Co. v. Wellborn 105
Nickell v. United States..... 562

Digitized by Google

Page

Pauly Jail Bldg. & Mfg. Co. v. Jefferson County..... 48

Robert Dollar, The..... 58

Schodde v. Twin Falls Land & Water Co..... 207

Seattle Nat. Bank v. Downie (two cases) 657

Page

Shannon v. United States..... 52

Stanley Dollar, The..... 93

Tiger, The..... 58

Tremont, The..... 304

United States v. Merriam..... 349

United States v. Moore..... 455

Waterhouse & Co. v. Dodge.....374

Digitized by Google

CASES CITED.

Page

Abbott v. Mobile, 119 Ala. 595, 24 South. 565 301
Abel v. President, 103 N. Y. 581, 9 N. E. 325, 57 Am. Rep. 773..... 135
Adams v. Adams, 21 Wall. (U. S.) 185, 190, 22 L. Ed. 504..... 339
Adams v. Broughton, Stra. 1078, 2 Kent's Comm. 388..... 644
Adams v. Railroad Co., 83 Ark. 300, 103 S. W. 725..... 626
Adams v. Tannage Patent Co., 81 Fed. 179, 26 C. C. A. 326..... 443
Adolph, The (D. C.) 5 Fed. 114..... 269
Aerkfetz v. Humphreys, 145 U. S. 418, 12 Sup. Ct. 835, 36 L. Ed. 758..... 137
Ætna Life Ins. Co. v. Board of Com'rs, 54 C. C. A. 468, 474, 117 Fed. 82, 88... 274
Alabama, The, 92 U. S. 695, 23 L. Ed. 763 63
Alabama, G. S. R. Co. v. Burgess, 116 Ala. 509, 22 South. 912.....37, 47
Alabama, G. S. R. R. Co. v. Dobbs, 101 Ala. 219, 12 South. 770.....37, 47
Albright v. Teas, 106 U. S. 613, 1 Sup. Ct. 550, 27 L. Ed. 295..... 587
Alfstad's Estate, In re, 27 Wash. 175, 67 Pac. 593..... 199
Alkire Grocery Co. v. Richesin (C. C.) 91 Fed. 79.....198, 200
American Bell Tel. Co. v. Wallace Electric Co. (C. C.) 37 Fed. 672..... 443
American Bridge Co. v. Seeds, 75 C. C. A. 407, 144 Fed. 605..... 80
American Carpet Lining Co. v. Chipman, 146 Mass. 385, 16 N. E. 1..... 337
American Carriage Co. v. Wyeth, 130 Fed. 389, 391, 71 C. C. A. 485..... 366
American Linseed Co. v. Heins, 72 C. C. A. 533, 141 Fed. 45.....550, 581
American School of Magnetic Healing v. McAnnulty, 187 U. S. 94, 107, 108, 109, 110, 23 Sup. Ct. 33, 47 L. Ed. 90..... 334, 335, 336
American Sugar Co. v. New Orleans, 181 U. S. 277, 282, 21 Sup. Ct. 646, 648, 45 L. Ed. 859..... 82
Anderson v. Munson (D. C.) 104 Fed. 913 272
Anglo-American Land M. & A. Co. v. Lombard, 132 Fed. 721, 736, 68 C. C. A. 39 177
Apel v. Kelsey, 47 Ark. 413, 419, 2 S. W. 102, 103..... 476
Apperson v. Allen, 42 Mo. App. 539.... 185
Arkansas Smelting Co. v. Belding Min. Co., 127 U. S. 379, 387, 8 Sup. Ct. 1303, 32 L. Ed. 246..... 311
Arkansas Southeastern R. Co. v. Union Sawmill Co., 154 Fed. 304, 83 C. C. A. 224 7

Page

Armour & Co. v. Russell, 75 C. C. A. 416, 144 Fed. 614, 615, 6 L. R. A. (N. S.) 602 481
Arnold v. Mundy, 6 N. J. Law, 4, 10 Am. Dec. 356..... 229
Ass'n v. Shryock, 20 C. C. A. 3, 11, 73 Fed. 774, 781..... 481
Atchison, Topeka & S. F. R. Co. v. Hurley, 82 C. C. A. 453, 153 Fed. 503, 508.. 508
Atchison, T. & S. F. R. Co. v. Reesman, 60 Fed. 370, 378, 9 C. C. A. 20, 23 L. R. A. 768..... 135
Atchison, T. & S. F. R. Co. v. Willey, 60 Kan. 819-825, 58 Pac. 472, 473..... 493
Avilla v. Nash, 117 Mass. 318..... 316

Bacon v. Kimmel, 14 Mich. 201..... 644
Bailey v. U. S., 109 U. S. 432, 3 Sup. Ct. 272, 27 L. Ed. 988..... 660
Baker v. Morton, 79 U. S. 150, 20 L. Ed. 262 352
Ballantine v. Ballantine (C. C.) 152 Fed. 775 109
Ball v. Halsell, 161 U. S. 72, 16 Sup. Ct. 554, 40 L. Ed. 622.....659, 661
Baltimore & O. R. Co. v. Baldwin, 75 C. C. A. 211, 144 Fed. 53..... 520
Baltimore & P. R. Co. v. Mackey, 157 U. S. 72, 86, 15 Sup. Ct. 491, 39 L. Ed. 624 520
Bangs v. Berg, 82 Iowa, 350, 48 N. W. 90 282
Bank v. Dunham, 18 Tex. Civ. App. 184, 44 S. W. 605..... 397
Bank v. Gage, 79 Ill. 207..... 397
Bank of Columbia v. Hagner, 1 Pet. 460, 464, 7 L. Ed. 219..... 328
Banks v. Manchester, 128 U. S. 244, 9 Sup. Ct. 36, 32 L. Ed. 425..... 337
Bannon v. U. S., 156 U. S. 464, 15 Sup. Ct. 467, 39 L. Ed. 494..... 535
Barbed Wire Case, 143 U. S. 275, 12 Sup. Ct. 443, 36 L. Ed. 154..... 121
Barnett v. Mendenhall, 42 Iowa, 296.... 448
Barney v. Winona, etc., R. Co., 117 U. S. 228, 232, 6 Sup. Ct. 654, 29 L. Ed. 858 408
Barreda v. Silsbee, 21 How. 146, 166, 16 L. Ed. 86..... 480
Barry v. Railroad Co., 77 Ark. 401, 91 S. W. 748..... 626
Bartlett v. Gale, 4 Paige, Ch. (N. Y.) 503, 507..... 339
Barton v. Drake, 21 Minn. 299..... 448
Basch v. Humboldt Mut. etc., Co., 35 N. J. Law, 429, 431..... 479
Basey v. Gallagher, 20 Wall. 670, 683, 22 L. Ed. 452..... 211
Bates & Guild Co. v. Payne, 194 U. S. 106, 111, 24 Sup. Ct. 595, 48 L. Ed. 894 336

Digitized by Google

Page

Baudouine, In re, 101 Fed. 574, 41 C. C. A. 318.....88, 307
Bauman v. Ross, 167 U. S. 548, 598, 17 Sup. Ct. 966, 42 L. Ed. 270..... 345
Beard v. Federy, 3 Wall. 478, 493, 18 L. Ed. 88..... 413
Beck v. Flournoy, etc., Co., 12 C. C. A. 497, 65 Fed. 30..... 655
Bee, The, 138 Fed. 303, 70 C. C. A. 593.. 668
Belk v. Meagher, 104 U. S. 279, 26 L. Ed. 735 85
Bennett v. Railroad Co., 102 U. S. 577, 26 L. Ed. 235..... 629
Bent v. Priest, 86 Mo. 475..... 66
Bessette v. W. B. Conkey Co., 194 U. S. 324, 328, 24 Sup. Ct. 665, 48 L. Ed. 997.. 583
Betts v. U. S., 132 Fed. 228, 231, 65 C. C. A. 452, 455..... 290
Bidwell v. Huff (C. C.) 103 Fed. 376.... 198
Bird v. Winyer, 24 Wash. 269, 276, 64 Pac. 178.....185, 192
Black v. Jackson, 177 U. S. 349, 357, 20 Sup. Ct. 648, 44 L. Ed. 801..... 411
Blackburn v. Southern Pac. R. Co., 34 Or. 215, 55 Pac. 225-229..... 495
Blackman v. Com., 124 Pa. 578, 17 Atl. 194 539
Blair v. Allen, 3 Dill. 101, Fed. Cas. No. 1,483 251
Blondheim v. Moore, 11 Md. 365..... 397
Bloodgood v. Clark, 4 Paige (N. Y.) 574 398
Bluedorn v. Railroad Co., 121 Mo. 258, 25 S. W. 943..... 316
Board of Com'rs v. Sutliff, 38 C. C. A. 167, 171, 97 Fed. 270, 274..... 274
Bodie v. Railroad Co., 66 S. C. 302, 44 S. E. 943..... 316
Bohn Mfg. Co. v. Erickson, 5 C. C. A. 341, 344, 55 Fed. 943, 946..... 74
Booth v. Wonderly, 36 N. J. Law 250.... 568
Boren v. U. S., 144 Fed. 801, 804, 75 C. C. A. 531..... 566
Borer v. Chapman, 119 U. S. 587-599, 7 Sup. Ct. 342, 30 L. Ed. 532..... 200
Boston, etc., R. Co. v. Gokey, 149 Fed. 42, 79 C. C. A. 64..... 81
Boston Ice Co. v. Potter, 123 Mass. 28, 25 Am. Rep. 9..... 311
Bowden v. Burnham, 59 Fed. 752, 8 C. C. A. 248..... 200
Boyd v. Cudderback, 31 Ill. 113..... 450
Bresee v. Traction Co., 149 Cal. 131, 85 Pac. 152, 154, 5 L. R. A. (N. S.) 1059... 497
Bresnahan v. Tripp Giant Co., 102 Fed. 899, 43 C. C. A. 48..... 121
Bressler v. Chicago, R. I. & P. R. Co., 74 Kan. 256, 86 Pac. 472..... 497
Brickell v. New York Cent. & H. R. R. Co., 120 N. Y. 290-294, 24 N. E. 449, 450, 17 Am. St. Rep. 648..... 497
British Queen Min. Co. v. Baker Silver Min. Co., 139 U. S. 222, 11 Sup. Ct. 523, 35 L. Ed. 147.....251. 252
Brodie, In re, 63 C. C. A. 419, 422, 128 Fed. 665, 668..... 656
Brown v. Chase, Walk. Ch. (Mich.) 43.. 398
Brown v. Guarantee Trust Co., 128 U. S. 403, 412, 9 Sup. Ct. 127, 130, 32 L. Ed. 468 383

Page

Brown v. Hitchcock, 173 U. S. 473, 478, 19 Sup. Ct. 485, 43 L. Ed. 772..... 411
Brown v. Shannon, 20 How. 55, 15 L. Ed. 826 587
Bruse v. Nelson, 35 Iowa, 157..... 218
Bube v. Birmingham Light & Power Co., 140 Ala. 276, 37 South. 285, 103 Am. St. Rep. 33..... 37
Buchanan v. Comstock, 57 Barb. (N. Y.) 568, 581..... 6
Buckalew v. Tennessee, C. I. & R. Co., 112 Ala. 146, 28 South. 606..... 37
Buckeye Marble & Freestone Co. v. Harvey, 92 Tenn. 115, 20 S. W. 429, 18 L. R. A. 252, 36 Am. St. Rep. 71..... 177
Buckingham v. Estes, 63 C. C. A. 20, 128 Fed. 584..... 509
Bucknall Bros. v. Murray, 5 Com. Cas. 312 272
Bucher v. Cheshire R. Co., 125 U. S. 555, 8 Sup. Ct. 974, 31 L. Ed. 795..... 551
Buford v. Houtz, 133 U. S. 320, 10 Sup. Ct. 305, 33 L. Ed. 618..... 55
Builders' Supply Depot v. O'Connor, 150 Cal. 265, 88 Pac. 982..... 280
Bundy Mfg. Co. v. Detroit Time Register Co., 94 Fed. 524, 36 C. C. A. 375..... 615
Burfenning v. Chicago, etc., R. Co., 163 U. S. 321, 16 Sup. Ct. 1018, 41 L. Ed. 175 335
Burke v. Union Coal & Coke Co., 84 C. C. A. 626, 157 Fed. 178, 180, 181.....73, 74
Burns v. Railroad Co., 76 Ark. 10, 88 S. W. 824..... 626
Burr v. Des Moines R. Co., 1 Wall. 99, 102, 17 L. Ed. 561..... 251
Burrell v. Montana, 194 U. S. 572, 24 Sup. Ct. 787, 48 L. Ed. 1122..... 560
Burt v. Merchants' Ins. Co., 115 Mass. 1 346
Butler v. Goreley, 146 U. S. 303, 13 Sup. Ct. 84, 36 L. Ed. 981..... 660
Butterworth v. Gould, 41 N. Y. 463..... 646
Butts v. Broughton, 72 Ala. 294..... 450
Buttz v. Northern Pac. R. Co., 119 U. S. 55, 67, 7 Sup. Ct. 100, 30 L. Ed. 330.... 457

Cabaniss v. Reco Min. Co., 116 Fed. 318, 54 C. C. A. 190..... 4
Caha v. U. S., 152 U. S. 221, 14 Sup. Ct. 513, 38 L. Ed. 415..... 588
Cahn v. Johnson, 12 Tex. Civ. App. 304, 33 S. W. 1000, 1002..... 397
Calderwood v. Brooks, 45 Cal. 519.....184, 192
Caldwell v. Carrington, 9 Pet. (U. S.) 86, 103, 9 L. Ed. 60..... 339
Camfield v. U. S., 167 U. S. 518, 519, 524, 525, 17 Sup. Ct. 864, 867, 42 L. Ed. 260.. 57, 655
Campbell v. Boyreau, 21 How. 223, 16 L. Ed. 96..... 250
Camp Bird v. Larson, 81 C. C. A. 412, 414, 152 Fed. 160, 162..... 75
Canadian Pac. R. Co. v. Elliott, 137 Fed. 904, 70 C. C. A. 242..... 286
Cansler v. Sallis, 54 Miss. 446..... 218
Capital Traction Co. v. Hof, 174 U. S. 1, 9, 19 Sup. Ct. 580, 43 L. Ed. 873..... 480
Carleton v. Franconia Iron & Steel Co., 99 Mass. 216..... 629

J.

Digitized by Google

Page

Carlson v. Railroad Co., 96 Minn. 504, 105 N. W. 555, 4 L. R. A. (N. S.) 349, 113 Am. St. Rep. 655..... 626
Carroll v. Railroad Co., 83 Ga. 452, 10 S. E. 163, 6 L. R. A..... 214
Carroll v. Safford, 3 How. 441, 460, 461, 11 L. Ed. 671..... 409
Carter v. Hightower, 79 Tex. 135, 15 S. W. 223..... 397
Centaur Co. v. Heinsfurter, 84 Fed. 955, 28 C. C. A. 581.....400, 401
Central Branch of Union Pac. R. Co. v. Twine, 23 Kan. 586, 33 Am. Rep. 203.. 240
Central Pac. R. Co. v. Dyer, 1 Sawy. 641, Fed. Cas. No. 2,552..... 185
Central Transp. Co. v. Pullman Car Co., 139 U. S. 59, 11 Sup. Ct. 478, 35 L. Ed. 55 178
Central Vt. R. Co. v. Soper, 8 C. C. A. 341, 353, 59 Fed. 879..... 528
Chair Co. v. Runnels, 77 Mich. 104, 43 N. W. 1006..... 281
Chamberlain v. Wright (Tex. Civ. App.) 35 S. W. 707, 17 Cyc. 659..... 479
Charles L. Jeffrey, The, 55 Fed. 686, 5 C. C. A. 247..... 425
Charles Morgan, The, 115 U. S. 75, 5 Sup. Ct. 1172, 29 L. Ed. 316..... 516
Charnock v. Higuerra, 111 Cal. 473, 476, 44 Pac. 171, 32 L. R. A. 190, 52 Am. St. Rep. 195..... 211
Charnock v. Texas & P. R. Co., 194 U. S. 432, 437, 24 Sup. Ct. 671, 48 L. Ed. 1057 77
Chase v. Railroad Co., 167 Mass. 383, 45 N. E. 911..... 494
Chase's Case, 1 Bland (Md.) 213, 17 Am. Dec. 277..... 397
Chateaugay Iron Co. v. Blake, 144 U. S. 476, 484, 12 Sup. Ct. 731, 36 L. Ed. 510.. 522
Chattahoochee, The, 173 U. S. 540, 548, 19 Sup. Ct. 491, 43 L. Ed. 801..... 666
Cherokee Nation v. Georgia, 5 Pet. 1, 17, 8 L. Ed. 25..... 457
Cherokee Nation v. Hitchcock, 187 U. S. 294, 307, 308, 23 Sup. Ct. 115, 47 L. Ed. 183 655
Chetwood v. California Nat. Bank, 113 Cal. 425, 45 Pac. 704..... 179
Chicago v. Powers, 42 Ill. 169, 89 Am. Dec. 418..... 528
Chicago, B. & Q. R. Co. v. Chicago, 166 U. S. 226, 246, 17 Sup. Ct. 581, 41 L. Ed. 979 480
Chicago, etc., Co. v. Gilbert, 3 C. C. A. 264, 52 Fed. 711..... 528
Chicago, etc., Co. v. Netolicky, 14 C. C. A. 615, 622, 67 Fed. 665..... 528
Chicago Great Western R. Co. v. Egan, 86 C. C. A. 230, 159 Fed. 40..... 77
Chicago Great Western R. Co. v. Roddy, 65 C. C. A. 470, 476, 131 Fed. 712, 718.. 248
Chicago, M. & St. P. R. Co. v. Donovan, 87 C. C. A. 600, 160 Fed. 826..... 519
Chicago, R. I. & P. R. Co. v. Palmer, 61 Kan. 860, 60 Pac. 736..... 493
Chicago & A. R. Co. v. Maher, 91 Ill. 312 241
Chicago & N. W. R. Co. v. Andrews, 64 C. C. A. 399, 404, 130 Fed. 65..... 520

Page

Choctaw, O. & G. R. Co. v. Holloway, 191 U. S. 334, 337, 24 Sup. Ct. 102, 48 L. Ed. 207..... 521
Choctaw, O. & G. R. Co. v. McDade, 191 U. S. 64, 67, 68, 24 Sup. Ct. 24, 48 L. Ed. 96.....74, 77, 521
Choctaw, O. & G. R. Co. v. Tennessee, 191 U. S. 326, 332, 24 Sup. Ct. 99, 48 L. Ed. 201..... 520
Cimiotti Co. v. Fur Refining Co., 198 U. S. 399, 25 Sup. Ct. 697, 49 L. Ed. 1100.. 275
City of Bloomington v. Legg, 151 Ill. 9, 37 N. E. 696, 42 Am. St. Rep. 216..... 528
City of Mankato v. Barber Asphalt Pav. Co., 73 C. C. A. 439, 142 Fed. 329, 340.. 67
City of St. Joseph v. Union R. Co., 116 Mo. 636, 22 S. W. 794, 38 Am. St. Rep. 626 .....572, 573
Civil Rights Cases, 109 U. S. 3, 3 Sup. Ct. 18, 27 L. Ed. 835..... 280
Clark v. Ridgely, 1 Md. Ch. 70..... 397
Clarke v. Koenig, 36 Neb. 572, 54 N. W. 842 .....448, 450
Clark Thread Co. v. Willimantic Linen Co., 140 U. S. 481, 492, 11 Sup. Ct. 846, 851, 35 L. Ed. 521..... 362
Clement v. U. S., 149 Fed. 305, 79 C. C. A. 243..... 543
Cloud v. Sumas, 9 Wash. 399, 37 Pac. 305 52
Clyatt v. U. S., 197 U. S. 207, 221, 222, 25 Sup. Ct. 429, 49 L. Ed. 726..... 302
Cobb v. Dyer, 69 Me. 494..... 218
Cocks v. Simmons, 55 Ark. 104, 17 S. W. 594, 29 Am. St. Rep. 28..... 475
Coffin v. U. S., 156 U. S. 432, 451, 15 Sup. Ct. 394, 39 L. Ed. 481..... 555
Coles v. Yorks, 31 Minn. 213, 17 N. W. 341 450
Collins v. Benbury, 25 N. C. (3 Ired. L.) 277, 38 Am. Dec. 722..... 229
Colorado, etc., Co. v. Rees, 21 Colo. 435, 440, 42 Pac. 42..... 528
Colorado & S. F. Ry. v. Ellis, 165 U. S. 150, 17 Sup. Ct. 255, 41 L. Ed. 666..... 281
Columbia Mill Co. v. Alcorn, 150 U. S. 460, 14 Sup. Ct. 151, 37 L. Ed. 1144..... 400
Com. v. Clark, 2 Metc. (Mass.) 23..... 655
Com. v. Dougherty, 107 Mass. 243..... 655
Com. v. McKie, 1 Gray (Mass.) 61, 65, 61 Am. Dec. 410..... 302
Confiscation Cases, 20 Wall. 92, 103, 22 L. Ed. 320..... 656
Conklin v. Staats, 70 N. J. Law, 771, 59 Atl. 144..... 596
Connecticut Mut. Life Ins. Co. v. Schaefer, 94 U. S. 458, 24 L. Ed 251..... 536
Considine v. U. S., 112 Fed. 342, 50 C. C. A. 272..... 535
Consolidated Ice Co. v. Hygeia Distilled Water Co., 151 Fed. 10-12, 80 C. C. A. 506 483
Consolidated Stone Co. v. Summit, 152 Ind. 297, 53 N. E. 235..... 127
Corcoran v. Canal Co., 94 U. S. 741, 24 L. Ed. 190..... 610
Corey v. Alderman, 46 Mich. 540, 9 N. W. 844..... 218
Corey v. Long, 43 How. Prac. (N. Y.) 497 398
Corliss v. Pulaski Co., 53 C. C. A. 567, 116 Fed. 289..... 252

Digitized by Google

Page

Cornelius v. Kessel, 128 U. S. 456, 461, 9 Sup. Ct. 122, 32 L. Ed. 482..... 411
Cotton v. U. S., 11 How. 229, 13 L. Ed. 675 58
Coughran v. Swift, 18 Ill. 414..... 398
Cowgell v. Warrington, 66 Iowa, 666, 24 N. W. 266, 268.....448, 449
Cowling v. Nelson, 76 Ark. 146, 150, 88 S. W. 913, 914..... 476
Crane v. Randolph, 30 Ark. 579..... 475
Creamery Package Mfg. Co. v. Hotsenpiller, 159 Ind. 99, 64 N. E. 600..... 531
Crockett, In re, 2 Ben. 415, Fed. Cas. No. 3,402 105
Crookston Lumber Co. v. Boutin, 149 Fed. 680, 79 C. C. A. 368..... 626
Crossman v. Pendery (C. C.) 8 Fed. 693 85
Cross v. Tscharnig, 27 Or. 49, 39 Pac. 540 290
Cromwell v. Sac Co., 94 U. S. 351, 24 L. Ed. 195..... 608
Culliford, Ex parte, 3 Barn. & C. 220... 583
Culmer v. Canby, 101 Fed. 195, 41 C. C. A. 302..... 270
Currence v. Ward, 43 W. Va. 367, 27 S. E. 329..... 672

Dale Tile Mfg. Co. v. Hyatt, 125 U. S. 46, 8 Sup. Ct. 756, 31 L. Ed. 683..... 587
Darling v. Westmoreland, 52 N. H. 401, 13 Am. Rep. 55..... 528
Darragh v. H. Wetter Mfg. Co., 22 C. C. A. 609, 619, 78 Fed. 7, 15, 17..... 339
Dastervignes v. U. S., 122 Fed. 30, 34, 58 C. C. A. 346, 350..... 55
Daunat v. Fuller, 120 N. Y. 558, 24 N. E. 816 264
Davidson v. Jennings, 27 Colo. 187, 60 Pac. 354, 48 L. R. A. 340, 83 Am. St. Rep. 49..... 281
Davis v. Chicago, R. I. & P. R. Co., 88 C. C. A. 488, 159 Fed. 10.....142, 626
Davis v. Crompton, 85 C. C. A. 633, 158 Fed. 735..... 483
Davis v. Hopkins, 18 Colo. 155, 32 Pac. 70 531
Davis v. Rainsford, 17 Mass. 207..... 354
Davitt v. National Life Ass'n, 36 App. Div. 632, 56 N. Y. Supp. 839..... 436
Dawson v. Chicago, R. I. & P. R. Co., 52 C. C. A. 286, 288, 114 Fed. 870, 872.... 77
Dean v. Pennsylvania R. Co., 129 Pa. 514, 525, 18 Atl. 718, 6 L. R. A. 143, 15 Am. St. Rep. 733..... 497
Deery v. Cray, 72 U. S. 795, 806, 807 (5 Wall.) 18 L. Ed. 653..... 481
De Graffenried v. Clark, 75 Ala. 425..... 450
Delaware, L. & W. R. Co. v. Kutter, 77 C. C. A. 315, 147 Fed. 51..... 573
Dell v. Marvin, 41 Fla. 221, 26 South. 188, 45 L. R. A. 201, 79 Am. St. Rep. 171.. 281
Dene Steamshipping Co. v. Bucknall Bros., 5 Com. Cas. 372..... 272
Denison v. Shawmut Min. Co., 159 Fed. 102 93
Dennick v. Railroad Co., 103 U. S. 11, 18, 26 L. Ed. 439, 10 Notes U. S. Rep. 8.. 232
Dennison v. Dennison, 9 How. Prac. (N. Y.) 246..... 50

Page

Denton v. Baker, 93 Fed. 46, 35 C. C. A. 187 224
Denver City Tramway Co. v. Norton, 141 Fed. 599, 607, 608, 73 C. C. A. 1..... 495
Denver & R. G. Co. v. Lorentzen, 24 C. C. A. 592, 594, 79 Fed. 291.....520, 521
Denver & R. G. R. Co. v. Norgate, 72 C. C. A. 365, 141 Fed. 247, 6 L. R. A. (N. S.) 981..... 550
De Sollar v. Hanscome, 158 U. S. 216, 221, 15 Sup. Ct. 816, 818, 39 L. Ed. 956.. 573, 611
Despain v. Wagner, 163 Ill. 598, 45 N. E. 129 450
Devereux v. Fleming (C. C.) 47 Fed. 177 6
De Weese v. Reinhard, 10 C. C. A. 55, 59, 60, 61 Fed. 777, 781, 782..... 413
Dickson v. Omaha & St. L. R. Co., 124 Mo. 140, 27 S. W. 476, 25 L. R. A. 320, 46 Am. St. Rep. 429..... 632
Dick v. U. S., 208 U. S. 340, 28 Sup. Ct. 399, 52 L. Ed. 520..... 655
Dimock v. Revere Copper Co., 117 U. S. 565, 6 Sup. Ct. 855, 29 L. Ed. 994..... 605
District of Columbia v. Arms, 107 U. S. 519, 524, 2 Sup. Ct. 840, 27 L. Ed. 618.. 528
Dobyns v. Bay State Ben. Ass'n, 144 Mo. 95, 109, 110, 45 S. W. 1107.....479, 480
Doe v. Wilson, 23 How. 457-463, 16 L. Ed. 584 457
Doherty v. Northern Pac. R. Co., 177 U. S. 421, 20 Sup. Ct. 677, 44 L. Ed. 830..... 406
Dolphin v. Plumley, 175 Mass. 304, 56 N. E. 281..... 316
Donnell v. Humphreys, 1 Mont. 518, 528 209
Doty v. Jewett (C. C.) 19 Fed. 337..... 251
Downer v. Miller, 15 Wis. 677..... 218
Doyle v. Martin, 55 Ark. 37, 17 S. W. 346 475
Drewry v. Barnes, 3 Russ. 94..... 398
Droney v. Doherty, 186 Mass. 205, 71 N. E. 547..... 531
Drury v. Midland R. Co., 127 Mass. 571, 585 345
Du Bois v. Kirk, 158 U. S. 53, 67, 15 Sup. Ct. 729, 39 L. Ed. 895..... 653
Duckwall v. Jones, 156 Ind. 682, 58 N. E. 1055, 60 N. E. 797..... 281
Duff v. Sterling Pump Co., 107 U. S. 636, 639, 2 Sup. Ct. 487, 27 L. Ed. 517..... 611
Dunbar v. U. S., 156 U. S. 192, 15 Sup. Ct. 325, 39 L. Ed. 390.....541, 543
Duncan v. Missouri Life Ins. Co., 87 C. C. A. 542, 160 Fed. 646..... 479
Dunlop v. U. S., 165 U. S. 491, 17 Sup. Ct. 375, 41 L. Ed. 799..... 542
Durell v. Abbott, 6 Wyo. 265, 44 Pac. 647 184
Durland v. U. S., 161 U. S. 306, 16 Sup. Ct. 508, 40 L. Ed. 769..... 542

Eagle Point, The, 189 U. S. 510, 23 Sup. Ct. 850, 47 L. Ed. 923; 120 Fed. 449, 56 C. C. A. 590..... 667
Eagle Wing, The (D. C.) 135 Fed. 832.... 427
Eames v. Worcester Pol. Institute, 127 Fed. 67, 73, 60 C. C. A. 37..... 615
Earle v. Coburn, 130 Mass. 596..... 646
Eaton, In re (D. C.) 110 Fed. 733..... 285
Edmands v. Boston, 108 Mass. 535, 551.. 346
Egan v. Barclay Fibre Co. (D. C.) 61 Fed. 527..... 578

Digitized by Google

Page

Electric R. Co. v. Jamaica Co. (C. C.) 61 Fed. 655 115
Elizabeth v. Pavement Co., 97 U. S. 137, 24 L. Ed. 1000 112
Elliott v. Piersol, 1 Pet. (U. S.) 328, 338, 7 L. Ed. 164 531
Emma J. Rose, The, 145 Fed. 13, 76 C. C. A. 43 668
Empire Transp. Co. v. Philadelphia & R. Coal & Iron Co., 77 Fed. 919, 925, 23 C. C. A. 564, 35 L. R. A. 623 ..... 390, 579
Erwin v. U. S., 97 U. S. 393, 337, 24 L. Ed. 1065 ..... 660, 661
Etowah Min. & Mfg. Co. v. Wills Valley Min. & Mfg. Co., 106 Ala. 492, 17 South. 522 397
Evans v. U. S., 153 U. S. 584, 587, 590, 14 Sup. Ct. 934, 936, 38 L. Ed. 830 ..543, 544, 546
Evanston v. Gunn, 99 U. S. 660, 668, 25 L. Ed. 306 520
Everhart v. Huntsville College, 120 U. S. 223, 7 Sup. Ct. 555, 30 L. Ed. 623 83
Exchange Bank v. Moss, 79 C. C. A. 278, 149 Fed. 340 635

Farmers' Nat. Bank v. Robinson, 59 Kan. 777, 53 Pac. 762 661
Farnum v. Insurance Co., 83 Cal 246, 23 Pac. 869, 872, 17 Am. St. Rep. 233 .. 490
Ferguson v. Mason, 60 Wis. 377, 19 N. W. 420 450
Fidelity Ins., Trust & Safe Deposit Co. v. Shenandoah Val. R. Co, 86 Va. 1, 9 S. E. 759, 19 Am. St. Rep. 858 217
Findlay Brewing Co. v. Bauer, 50 Ohio St. 560, 35 N. E. 55 528
First Nat. Bank v. Pennsylvania Trust Co., 124 Fed. 968, 60 C. C. A. 10 483
First Nat. Bank of Chicago v. Steinway (C. C.) 77 Fed. 661 198
Fisk, Ex parte, 113 U. S. 713, 5 Sup. Ct. 724, 28 L. Ed. 1117 536
Fiske v. Gould (C. C.) 12 Fed. 372 199
Fitchburg R. Co. v. Nichols, 85 Fed 369, 29 C. C. A. 464 83
Fitzpatrick v. Montgomery, 20 Mont. 181, 187, 50 Pac. 416, 417, 63 Am. St. Rep. 622 211
Fitzpatrick v. U. S., 178 U. S. 304, 315, 20 Sup. Ct. 944, 44 L. Ed. 1078 559
Fogarty v. Burke, 2 Dru. & War. 580 398
Ft. Morgan Land & Canal Co. v. South Platte Ditch Co., 18 Colo. 1, 30 Pac. 1032, 1033, 36 Am. St. Rep. 259 210
Ft. Pitt Gas Co. v. Evansville Contract Co., 123 Fed. 63, 64, 59 C. C. A. 281 .. 76
Fossbinder v. Svitak, 16 Neb. 499, 20 N. W. 866 655
Foster, In re, 3 Ben. 386, Fed. Cas. No. 4,962 105
Foster v. Portland Gold Min. Co., 52 C. C. A. 393, 114 Fed. 613 629
Fowle v. New Haven & N. Co., 107 Mass. 352 240
Freedman Savings & Trust Co. v. Shepherd, 127 U. S. 494, 8 Sup. Ct. 1200, 32 L. Ed. 163 660
Friedman, In re (D. C.) 153 Fed. 939 .. 307
Frisbie v. U. S., 157 U. S. 160, 167, 15 Sup. Ct. 586, 39 L. Ed. 657 555

Page

Frohs v. Dubuque, 109 Iowa, 219, 80 N. W. 341 528

Gadsby v. Monroe, 115 Mich. 282, 73 N. W. 367 448
Gaines & Co. v. Leslie, 25 Misc. Rep. 20, 54 N. Y. Supp. 421 444
Gamecock, The, 92 U. S. 695, 23 L. Ed. 763 63
Gardner v. Bonestell, 180 U. S. 362, 21 Sup. Ct. 399, 45 L. Ed. 574 335
Garretson v. Pacific Crude Oil Co., 146 Cal. 184, 79 Pac. 838 179
Garthe v. Hart, 73 Cal. 541, 15 Pac. 93 .. 85
Gee v. Moore, 14 Cal. 472 449
Geib v. Reynolds, 35 Minn. 331, 28 N. W. 923 218
Gemmell v. Swain, 28 Mont. 331, 72 Pac. 662, 98 Am. St. Rep. 570 85
General Electric Co. v. Yost Electric Co., 139 Fed. 568, 71 C. C. A. 552 615
Germania Fire Ins. Co. v. Muller, 110 Ill. App. 190, 193 479
Germania Iron Co. v. James, 89 Fed. 811, 818, 32 C. C. A. 348, 351, 355 411
Gibson v. Chouteau, 13 Wall. 99, 102, 20 L. Ed. 534 ..... 56, 57, 412
Gila River R. Co. v. Lyon, 203 U. S. 465, 475, 27 Sup. Ct. 145, 51 L. Ed. 276 ..... [illegible]
Gilbert v. Block, 51 Ill. App 516 397
Gilbert v. Burlington, C. R. & N. R. Co. (C. C.) 123 Fed. 832; 63 C. C A. 27, 32, 128 Fed. 529, 534 ..... 77, 582
Gillis v. Downey, 85 Fed. 433, 433, 29 C. C. A. 286 184
Gilmer v. Higley, 110 U. S 47, 50, 3 Sup. Ct. 471, 28 L. Ed. 62 481
Giulio, The (D. C.) 34 Fed. 909 579
Glass v. Com. (Ky.) 23 S. W. 811 273
Gleeson v. Virginia Midland R. Co., 140 U. S. 435, 443, 11 Sup. Ct. 859, 35 L. Ed. 458 235
Glenmont Lumber Co. v. Roy, 61 C. C. A. 506, 510, 126 Fed. 524, 528 ..... 73, 74, 550
Glover v. U. S., 147 Fed. 426, 77 C. C. A. 450 302
Goodloe v. Dean, 81 Ala. 479, 8 South. 197 449
Goodman v. Niblack, 102 U. S. 556, 26 L. Ed. 226 ..... 660, 661
Goodyear Co. v. Jackson, 112 Fed. 146, 50 C. C. A. 159, 55 L. R. A. 692 117
Gould v. Wise, 18 Nev. 253, 3 Pac. 30 ... 280
Gow v. William W. Brauer S. S. Co. (D. C.) 113 Fed. 672 269
Graham v. Bayne, 18 How. 60, 15 L. Ed. 265 251
Grand Trunk R. Co. v. Ives, 144 U. S. 408, 416, 417, 12 Sup. Ct. 679, 36 L. Ed. 485 ..... 77, 348, 496
Grand Trunk R. Co. v. Richardson, 91 U. S. 454, 469, 470, 23 L. Ed. 356 ..... 525, 528
Gray v. Chaplin, 2 Russ. 126 398
Guhl v. Whitcomb, 109 Wis. 63-85, 85 N. W. 142, 83 Am. St. Rep. 889 626
Gulf, etc., Co. v. Johnson, 4 C. C. A. 447, 54 Fed. 474 528
Gunnison Co. v. Rollins, 173 U. S. 263, 19 Sup. Ct. 390, 43 L. Ed. 689 289
Gurley v. Railroad, 104 Mo. 211, 16 S. W. 11 133

Digitized by Google

Page

Gust Lake v. Shenango Furnace Co., 160 Fed. 887, 88 C. C. A. 69..... 80

Haber v. Klauberg, 3 Mo. App. 342..... 576
Hall v. Loomis, 63 Mich. 709, 711, 30 N. W. 374.....448, 450
Hammond v. Baker, 61 N. H. 53..... 218
Hardin v. Jordan, 140 U. S. 371, 381, 11 Sup. Ct. 808, 838, 35 L. Ed. 428....228, 229
Harrington v. State, 54 Miss. 490, 494.... 541
Harris v. Elliott, 10 Pet. 25, 53, 9 L. Ed. 333 209
Harris v. McNamara, 97 Ala. 181, 12 South. 103..... 47
Harris v. Rosenberger, 145 Fed. 449, 76 C. C. A. 225..... 337
Harshman v. Rose, 50 Neb. 113, 69 N. W. 755..... 655
Hartman v. Warren, 22 C. C. A. 30, 36, 76 Fed. 157, 163..... 412
Hayden v. Missouri, K. & T. R. Co., 124 Mo. 573, 28 S. W. 74..... 626
Heaton-Peninsular Button-Fastener Co. v. Eureka Specialty Co., 25 C. C. A. 267, 77 Fed. 288, 35 L. R. A. 728..... 587
Heckman v. Sutter, 128 Fed. 393, 395, 63 C. C. A. 135..... 228
Heff, Matter of, 197 U. S. 488, 25 Sup. Ct. 506, 49 L. Ed. 848..... 655
Heinze v. Butte & B. Consol. Min. Co., 129 Fed. 274, 63 C. C. A. 388, 389, 401.. 584
Henderson v. New York Cent. R. Co., 78 N. Y. 423..... 241
Hendryx v. Fitzpatrick (C. C.) 19 Fed. 810 583
Henze v. St. Louis, K. C. & N. Ry., 71 Mo. 640..... 495
Herring-Hall-Marvin Safe Co. v. Hall's Safe Co., 28 Sup. Ct. 350, 351, 52 L. Ed. 616 .....111, 259
Herrington v. State, 53 Ga. 552..... 583
Hess v. State, 5 Ohio, 5, 22 Am. Dec. 767 541
Hewitt v. Schultz, 180 U. S. 139, 21 Sup. Ct. 309, 45 L. Ed. 463..... 408
Hill v. Portland & R. R. Co., 55 Me. 438, 92 Am. Dec. 601..... 528
Hirsch, In re (D. C.) 97 Fed. 571..... 105
Hoadley, In re (D. C.) 101 Fed. 233.... 284
Hoag v. New York Cent. & H. R. R. Co., 111 N. Y. 199, 18 N. E. 648..... 497
Hobbs v. Beach, 180 U. S. 383, 392, 21 Sup. Ct. 409, 413, 45 L. Ed. 586..... 120
Hobbs v. McLean, 117 U. S. 567, 6 Sup. Ct. 870, 29 L. Ed. 940..... 660
Hodges v. Hodges, 5 Metc. (Mass.) 205.. 241
Hodges & White v. Farnham, 49 Kan. 777, 31 Pac. 606..... 448
Holland v. Challen, 110 U. S. 15, 3 Sup. Ct. 495, 28 L. Ed. 52..... 185
Hollister v. U. S., 76 C. C. A. 337, 145 Fed. 773..... 655
Holmes v. Goldsmith, 147 U. S. 150, 164, 13 Sup. Ct. 288, 37 L. Ed. 118..... 531
Holt v. Baker, 58 N. H. 276..... 218
Holton v. Guinn (C. C.) 65 Fed. 450-452 339
Hopkins v. Grimshaw, 165 U. S. 342, 349, 17 Sup. Ct. 401, 41 L. Ed. 739..... 558
Horn v. Jones, 28 Cal. 195..... 193
Horswell v. Ruiz, 67 Cal. 111, 7 Pac. 197 85

Page

Houghton v. Whitin Mach. Works, 153 Fed. 740, 83 C. C. A. 84..... 590
House v. Metcalf, 27 Conn. 631..... 528
Howard v. Detroit Stove Works, 150 U. S. 164, 170, 14 Sup. Ct. 68, 37 L. Ed. 1039 615
Hoyt v. Horne, 145 U. S. 302, 12 Sup. Ct. 922, 36 L. Ed. 713..... 112
Hoyt v. Weyerhaeuser, 161 Fed. 324, 88 C. C. A. 404..... 413
Huggart v. Railroad, 134 Mo. 679, 36 S. W. 220..... 133
Huguley Co. v. Galeton Mills, 184 U. S. 290, 295, 22 Sup. Ct. 452, 454, 46 L. Ed. 546 81
Humbird v. Avery, 195 U. S. 480, 482, 25 Sup. Ct. 123, 49 L. Ed. 286.....408, 411
Humble v. Hunter, 12 Q. B. 310, 317.... 311
Humes v. Scruggs, 94 U. S. 22, 24, 24 L. Ed. 51..... 333
Hume v. U. S., 118 Fed. 689, 698, 55 C. C. A. 407..... 535
Huntington v. Attrill, 146 U. S. 657, 674, 13 Sup. Ct. 224, 36 L. Ed. 1123..... 232
Hutchcraft v. Lutwig, 13 Wash. 240, 43 Pac. 29..... 354
Hutchinson v. Railroad Co., 161 Mo. 246, 61 S. W. 635, 852, 84 Am. St. Rep. 710.. 137
Hutchison v. Otis, 190 U. S. 552, 555, 23 Sup. Ct. 778, 47 L. Ed. 1179..... 509
Hygienic Fleeced Underwear Co. v. Way, 137 Fed. 592, 70 C. C. A. 553..... 259

Illinois Cent. R. R. Co. v. Adams, 180 U. S. 34, 21 Sup. Ct. 251, 45 L. Ed. 410.... 604
Illinois Cent. R. Co. v. McLeod, 78 Miss. 334, 341, 29 South. 76, 52 L. R. A. 954, 84 Am. St. Rep. 630..... 497
Imbescheid v. Old Colony R. Co., 171 Mass. 209, 50 N. E. 609..... 345
Insurance Co. v. Comstock, 16 Wall. 258, 269, 21 L. Ed. 493..... 480
Insurance Co. v. Folsom, 18 Wall. 237, 249, 21 L. Ed. 827..... 480
Insurance Co. v. French, 30 Ohio St. 240, 27 Am. Rep. 443..... 480
International Silver Co. v. Rogers Co. (C. C.) 110 Fed. 955..... 601
International Trust Co. v. Davis & Farnum Mfg. Co., 70 N. H. 118, 46 Atl. 1054 218
Irvine v. Marshall, 20 How. 558, 15 L. Ed. 994..... 56
Islander, The, 152 Fed. 385, 81 C. C. A. 511 668
Istok, The, 7 Com. Cas. 190..... 272
Ivall v. Willis, 17 Wash. 645, 50 Pac. 467 281
Iversen v. Minnesota Mut. Life Ins. Co. (C. C.) 137 Fed. 268.....435, 436
Ives v. Hamilton, 92 U. S. 431, 23 L. Ed. 494..... 112

Jacks v. Nichols, 5 N. Y. 178..... 338
Jackson v. Burnham, 20 Colo. 532, 39 Pac. 577..... 523
Jackson v. Hathaway, 15 Johns. (N. Y.) 447, 8 Am. Dec. 263..... 209
Jackson v. U. S. (C. C.) 21 Fed. 35..... 251
James v. Germania Iron Co., 46 C. C. A. 476, 479, 481, 107 Fed. 597, 600, 602..... 337, 405, 411

Digitized by Google

Page

Jaquith v. Rowley, 188 U. S. 620, 23 Sup. Ct. 369, 47 L. Ed. 620..... 88
Jeffries v. East Omaha Land Co., 134 U. S. 178, 10 Sup. Ct. 518, 33 L. Ed. 872 354
J. M. Griffith, The (D. C.) 71 Fed. 317.. 90
John H. May, The (D. C.) 52 Fed. 882.. 427
Johnson v. Drew, 171 U. S. 93, 99, 18 Sup. Ct. 800, 43 L. Ed. 88..... 335
Johnson v. McIntosh, 8 Wheat. 543, 5 L. Ed. 681..... 457
Johnson v. Stewart, 62 Ark. 164-170, 34 S. W. 889..... 626
Johnson v. Towsley, 13 Wall. 72, 80, 20 L. Ed. 485..... 412
Jones v. Johnston, 18 How. 150, 155, 15 L. Ed. 320..... 209
Jones v. Meehan, 175 U. S. 1, 18, 20 Sup. Ct. 1, 4, 44 L. Ed. 49.....457, 460
Jones v. Missouri-Edison Electric Co., 75 C. C. A. 631, 144 Fed. 765, 780..... 383
Jones v. Northern Pac. R. Co., 34 Land Dec. Dep. Int. 105.....406, 407, 408
Jones v. Portland, 35 Or. 512, 58 Pac. 657 51
Jones v. State, 118 Ind. 39, 20 N. E. 634 531
Joseph Dry Goods Co. v. Hecht, 120 Fed. 760, 764, 57 C. C. A. 64..... .....3, 4
Jourdan v. Barrett, 4 How. 168, 169, 185, 11 L. Ed. 924.....56, 655
Justices v. Murray, 9 Wall. 274, 277, 19 L. Ed. 658..... 480

Kansas City, M. & B. R. Co. v. Sanders, 98 Ala. 293, 13 South. 57..... 37
Kean v. Colt, 5 N. J. Eq. 365..... 398
Kelley v. Boettcher, 29 C. C. A. 14, 85 Fed. 55, 64..... 383
Kelsay v. Railroad, 129 Mo. 352, 30 S. W. 339 133
Kelsey v. Crowther, 162 U. S. 404, 408, 16 Sup. Ct. 808, 40 L. Ed. 1017..... 328
Kent v. Lincoln, 32 Vt. 591..... 528
Kentucky Distilleries & Warehouse Co. v. Warwick Co., 109 Fed. 280, 283. 48 C. C. A. 363, 366.....328, 329
Keyser v. Wessel, 12 Am. Bankr. Rep. 126, 128 Fed. 281, 62 C. C. A. 650..... 605
Keystone Bridge Co. v. Phœnix Iron Co., 96 U. S. 274, 24 L. Ed. 344..... 276
King v. Batterson, 13 R. I. 117, 120, 43 Am. Rep. 13..... 311
King v. French, 2 Sawy. 441, Fed. Cas. No. 7,793..... 192
King v. Morgan, 48 C. C. A. 507, 510, 109 Fed. 446, 449..... 74
Kirkpatrick v. St. Louis & S. F. R. Co., 87 C. C. A. 35, 38, 159 Fed. 855, 858.... 521
550, 574
Knapp v. Connecticut Mut. Life Ins. Co., 29 C. C. A. 171, 85 Fed. 329, 40 L. R. A. 861 386
Kohl v. U. S., 91 U. S. 367, 23 L. Ed. 449 57
Kokomo Fence Co. v. Kitselman, 189 U. S. 8[illegible]23 Sup. Ct. 521, 47 L. Ed. 689..... 275

Lake Erie & W. R. Co. v. Craig, 80 Fed. 495, 26 C. C. A. 585..... 134
Lamb v. Grand Rapids School Furniture Co. (C. C.) 29 Fed. 474..... 402

Page

Land Co. v. Blevens, 12 Tex. Civ. App. 410, 34 S. W. 832..... 397
Lane v. Welds, 99 Fed. 286, 39 C. C. A. 528 608
Lansden v. McCarthy, 45 Mo. 106..... 311
Last Chance Min. Co. v. Tyler Min. Co., 157 U. S. 690, 15 Sup. Ct. 733, 39 L. Ed. 859 610
Laura Madsen, The (D. C.) 84 Fed. 362.. 91
Lawrence v. Du Bois, 16 W. Va. 443.... 672
Lawrence v. Penn., etc., Ins. Co., 113 La. 87, 36 South. 898, 899..... 480
Lazarus v. Phelps, 152 U. S. 81-85, 14 Sup. Ct. 477, 478, 38 L. Ed. 363..... 55
Ledbetter v. U. S., 170 U. S. 606, 610, 611, 18 Sup. Ct. 774, 775, 776, 42 L. Ed. 1162 .....299, 540, 543, 544
Leeper v. Insurance Co., 93 Mo. App. 602, 67 S. W. 941..... 479
Lee v. Stiger, 30 N. J. Eq. 610, 611..... 339
Leffingwell v. Warren, 67 U. S. 599, 17 L. Ed. 261..... 551
Leonard v. White, 7 Mass. 8, 5 Am. Dec. 19 209
Lichty v. Beale, 75 Neb. 770, 106 N. W. 1018 .....447, 448
Liebig's Extract of Meat Co. v. Libby (C. C.) 103 Fed. 87-89..... 443
Liebig's Extract of Meat Co. v. Walker (C. C.) 115 Fed. 822-825..... 443
Life Ins. Co. v. Pendleton, 112 U. S. 696, 707, 5 Sup. Ct. 314, 28 L. Ed. 866..... 479
Lincoln v. Power, 151 U. S. 436, 438, 14 Sup. Ct. 387, 38 L. Ed. 224..... 480
Lindsey v. Kainana, 4 Haw. 165..... 352
Liskey v. Snyder, 56 W. Va. 610, 49 S. E. 515 672
Litchfield v. Goodnow, 123 U. S. 549, 8 Sup. Ct. 210, 31 L. Ed. 199..... 32
Littell v. Saulsberry, 40 Wash. 550, 82 Pac. 909..... 281
Little v. Hackett, 116 U. S. 366, 6 Sup. Ct. 391, 29 L. Ed. 652..... 496
Little Rock & M. R. Co. v. Barry, 84 Fed. 944, 949, 28 C. C. A. 644, 43 L. R. A. 349..... 134
Lloyd v. Passingham, 16 Ves. Jr. 59-70.. 398
London & S. F. Bank v. Dexter, Horton & Co., 126 Fed. 593, 61 C. C. A. 515.... 220
Lone Wolf v. Hitchcock, 187 U. S. 553, 23 Sup. Ct. 216, 47 L. Ed. 299..... 460
Loom Co. v. Higgins, 105 U. S. 580, 591, 26 L. Ed. 1177..... 121
Lord v. Staples, 148 Fed. 16, 78 C. C. A. 167 .....609, 610
Louisville, etc., Co. v. Falvey, 104 Ind. 409, 413, 416, 3 N. E. 389, 392, 4 N. E. 908 .....523, 531
Louisville Trust Co. v. Cincinnati, 76 Fed. 296, 22 C. C. A. 334..... 88
Louisville Trust Co. v. Comingor, 184 U. S. 18, 22 Sup. Ct. 293, 46 L. Ed. 413.... 88
Louisville & N. R. Co. v. Markee, 103 Ala. 160, 15 South. 511, 49 Am. St. Rep. 21 37
Louisville & N. R. Co. v. Orr, 91 Ala. 548, 8 South. 360, 363; 121 Ala. 489, 26 South. 35..... 37, 39
Louisville & N. R. Co. v. Robinson, 141 Ala. 325, 37 South. 431..... 47

Digitized by Google

Page

Lovejoy v. Murray, 3 Wall. 11, 18 L. Ed. 129 644
Lovell v. De Bardelaben C. & I. Co., 90 Ala. 13, 7 South. 756.....37, 47
Lovell v. St. Louis Mut. Life Ins. Co., 111 U. S. 264, 4 Sup. Ct. 390, 28 L. Ed. 423.....385, 386, 434
Low v. Elwell, 121 Mass. 309, 23 Am. Rep. 272 655
Low v. Holmes, 17 N. J. Eq. 143..... 6
L. Stein & Co., In re, 127 Fed. 547, 62 C. C. A. 272..... 105
Lucas v. Bank of Darien, 2 Stew. (Ala.) 280 338
Lumpkins v. Johnson, 61 Ark. 80, 32 S. W. 65..... 476
Lunt v. Holland, 14 Mass. 149..... 354
Lybrandt v. Eberly, 36 Pa. 347..... 282

McAllister v. New England, etc., Ins. Co., 101 Mass. 558, 561, 3 Am. Rep. 404.. 480
McCarragher v. Rogers, 120 N. Y. 526, 24 N. E. 812..... 528
McCarthy v. Peake, 18 How. Pr. 138..... 4
McClaskey v. Barr (C. C.) 40 Fed. 559, 561 339
McCoach v. Norris, 142 Fed. 120, 73 C. C. A. 610..... 254
McConnell v. Dennis, 82 C. C. A. 501, 153 Fed. 547..... 387
McCormick v. Los Angeles City Water Co., 40 Cal. 185..... 281
McCowan v. Baine (App. Cas. 1891, 401).. 618
McCullough v. Barr, 145 Pa. 459, 22 Atl. 962 293
McDermott v. Severe, 202 U. S. 600, 610, 26 Sup. Ct. 709, 50 L. Ed. 1162..... 520
McDonough v. Gilman, 3 Allen (Mass.) 264, 80 Am. Dec. 72..... 241
McElroy v. U. S., 164 U. S. 80, 17 Sup. Ct. 31, 41 L. Ed. 355..... 534
McGehee v. McCarley, 91 Fed. 462, 465, 33 C. C. A. 629; 103 Fed. 55, 44 C. C. A. 252 .....40, 41, 43
McGinnis v. Printing Co., 122 Mo. App. 227, 99 S. W. 4..... 551
McGorray v. O'Connor, 31 C. C. A. 114, 116, 87 Fed. 586, 588..... 340
McGovern v. Mowry, 91 Cal. 383, 27 Pac. 746 193
McGowan v. American Tan Bark Co., 121 U. S. 600, 7 Sup. Ct. 1329, 30 L. Ed. 1027 265
McGrail v. McGrail, 48 N. J. Eq. 532-536, 22 Atl. 582, 584..... 491
McGrath v. Railroad Co., 76 Minn. 146, 78 N. W. 972..... 316
McInerney v. U. S., 143 Fed. 729, 74 C. C. A. 655.....290, 295
McIntyre v. Roeschlaub (C. C.) 37 Fed. 556, 557..... 413
McKay v. Kalyton, 204 U. S. 458, 27 Sup. Ct. 346, 51 L. Ed. 566..... 655
McKelvey v. Railroad Co., 35 W. Va. 500, 14 S. E. 261..... 316
Mackin v. U. S., 117 U. S. 348, 6 Sup. Ct. 777, 29 L. Ed. 909..... 534
McLachlin v. Barker, 64 Mo. App. 511... 133
McLish v. Roff, 141 U. S. 661, 669, 12 Sup. Ct. 118, 120, 35 L. Ed. 893..... 81

Page

McMullen v. Hoffman, 174 U. S. 639, 19 Sup. Ct. 839, 43 L. Ed. 1117..... 454
McNamara v. Logan, 100 Ala. 187, 14 South. 175.....36, 37
Magee v. The Moss, Gilp. 219, Fed. Cas. No. 8,944..... 90
Magniac v. Thompson, 7 Pet. 348, 390, 8 L. Ed. 709..... 520
Magowan v. New York Belting Co., 141 U. S. 332, 12 Sup. Ct. 71, 35 L. Ed. 781.. 121
Mann v. Tacoma Land Co., 153 U. S. 273, 14 Sup. Ct. 820, 38 L. Ed. 714..... 229
Marbury Lumber Co. v. Westbrook, 121 Ala. 179, 25 South. 914..... 42
March v. State, 5 Tex. App. 450, 456.... 583
Marcus v. Loane, 133 N. C. 54, 45 S. E. 354 316
Massachusetts Ben. Life Ass'n v. Sibley, 158 Ill. 411, 42 N. E. 137..... 479
Mastin v. Noble, 85 C. C. A. 98, 157 Fed. 506 67
Meek v. Lange, 65 Neb. 783, 91 N. W. 695 448
Menard v. Goggan, 121 U. S. 253, 7 Sup. Ct. 873, 30 L. Ed. 914..... 83
Merkle v. Railroad Co., 49 N. J. Law, 473, 9 Atl. 680..... 495
Mermaid, The, 115 Fed. 13, 52 C. C. A. 607 89
Metcalf v. Barker, 187 U. S. 165, 23 Sup. Ct. 67, 47 L. Ed. 122..... 88
Meyer, In re, 98 Fed. 976, 39 C. C. A. 368 105
Mexia v. Oliver, 148 U. S. 664, 673, 13 Sup. Ct. 754, 37 L. Ed. 602..... 481
Michigan Home Colony Co. v. Tabor, 72 C. C. A. 480, 141 Fed. 332..... 519
Miller v. Eagle Mfg. Co., 151 U. S. 186, 208, 14 Sup. Ct. 310, 38 L. Ed. 121..... 613
Miller v. Life Ins. Co., 12 Wall. 285, 300, 20 L. Ed. 398..... 480
Mississippi River Logging Co. v. Schneider, 20 C. C. A. 390, 392, 396, 74 Fed. 195, 197.....75, 76
Missouri Drug Co. v. Wyman (C. C.) 129 Fed. 623, 629..... 337
Missouri, K. & T. R. Co. v. Bussey, 66 Kan. 735, 745, 71 Pac. 261..... 497
Missouri, K. & T. R. Co. v. Jenkins, 74 Kan. 487, 87 Pac. 702..... 493
Missouri, K. & T. R. Co. v. Medaris, 60 Kan. 151, 55 Pac. 875..... 235
Missouri, K. & T. R. Co. v. Wilhoit, 87 C. C. A. 401, 160 Fed. 440..... 521
Missouri Pac. R. Co. v. Haley, 25 Kan. 35, 53..... 235
Missouri Pac. R. Co. v. Moseley, 57 Fed. 921, 6 C. C. A. 641..... 626
Mitchell v. Ewart, 81 Fed. 390, 26 C. C. A. 443..... 112
Monarch Cycle Mfg. Co. v. Royer Wheel Co., 44 C. C. A. 523, 526, 105 Fed. 324, 328 248
Montana R. Co. v. Warren, 137 U. S. 348, 353, 11 Sup. Ct. 96, 34 L. Ed. 681.... 522
Montgomery v. Birge, 31 Ark. 491..... 475
Mooney v. Insurance Co., 80 Mo. App. 192, 195..... 479
Moore v. Bank of Metropolis, 13 Pet. (U. S.) 302, 310, 10 L. Ed. 172..... 531
Moore v. Robbins, 96 U. S. 530, 536, 24 L. Ed. 848..... 412

Digitized by Google

Page

Moores v. Bank, 104 U. S. 625, 630, 26 L. Ed. 870 481
Morgan v. Moore, 69 Mass. 319 354
Moritz v. Miller, 87 Ala. 331, 6 South. 269 3
Morris v. Nixon, 1 How. 118, 11 L. Ed. 69 672
Morris v. Railroad Co., 47 C. C. A. 661, 108 Fed. 747 582
Morrow v. James, 69 Ark. 539, 64 S. W. 269 476
Morse v. Minneapolis & St. L. R. Co., 30 Minn. 465, 471, 16 N. W. 358, 361 527
Moslem, The, Olc. 289, Fed. Cas. No. 9,-875 89
Moss, The, Gilp. 219, Fed. Cas. No. 8,-944 90
Motey v. Pickle Marble & Granite Co., 20 C. C. A. 366, 370, 371, 74 Fed. 155, 159 ..... 75, 76
Mount Eden, The (D. C.) 87 Fed. 483 .. 96
Mowry v. Farmers' Loan & Trust Co., 76 Fed. 38, 43, 22 C. C. A. 52, 56 217
Mueller v. Nugent, 184 U. S. 1, 22 Sup. Ct. 269, 46 L. Ed. 405 307
Mullen v. Jennings, 9 N. J. Eq. 192 398
Municipal Com'rs v. Lockhart, Ir. 3 Eq. 515 398
Murry v. Sell, 23 W. Va. 475 672
Myers v. Hudson Iron Co., 150 Mass. 125, 131, 138, 22 N. E. 631, 633, 15 Am. St. Rep. 176 ..... 523, 528

Nacoochee, The, 137 U. S. 330, 339, 11 Sup. Ct. 122, 34 L. Ed. 687 ..... 666, 667
Nairn v. National Biscuit Co., 120 Mo. App. 144, 96 S. W. 679 551
Nashville C. & St. L. R. Co. v. Hill, 146 Ala. 240, 40 South. 612 ..... 37, 39
National Biscuit Co. v. Nolan, 138 Fed. 9, 70 C. C. A. 436 302
National Candy Co. v. Miller, 160 Fed. 56 552
National Cash Register Co. v. Leland, 94 Fed. 502, 509, 37 C. C. A. 372 589
National Life Ins. Co. of N. A. v. National Life Ins. Co., 28 Sup. Ct. 541, 52 L. Ed. 808 340
National Tube Works v. Ballou, 146 U. S. 517, 13 Sup. Ct. 165, 36 L. Ed. 1070 .. 198
Neal v. Andrews, 53 Ark. 445, 448, 14 S. W. 646 ..... 474, 475
Neiman v. Schuster (Tex. Civ. App.) 43 S. W. 1075 450
Nelson v. Northern Pac. R. Co., 188 U. S. 108, 23 Sup. Ct. 302, 47 L. Ed. 406 408
Nevitt, In re, 117 Fed. 448, 458, 54 C. C. A. 622, 632 583
New Dunderberg Min. Co. v. Old, 79 Fed. 598, 606, 25 C. C. A. 116, 124 413
Newhall v. Jordan (C. C.) 149 Fed. 586 ..... 513, 514
New Hampshire Sav. Bank v. Richey, 58 C. C. A. 294, 121 Fed. 956 383
New Orleans v. Warner, 175 U. S. 120, 20 Sup. Ct. 44, 44 L. Ed. 96 51
New Orleans Pac. R. Co. v. Parker, 143 U. S. 42, 58, 12 Sup. Ct. 364, 36 L. Ed. 66 408
New York Cent. & H. R. R. Co. v. McGrath, 151 Fed. 436, 80 C. C. A. 666 137

Page

New York Filter Mfg. Co. v. Jackson (C. C.) 112 Fed. 678-680 443
Nichols v. Boston, 98 Mass. 39, 93 Am. Dec. 132 241
Nimrod, The, Gilp. 83, Fed. Cas. No. 17,-959 90
Noble v. Union River Logging R. Co., 147 U. S. 171, 172, 13 Sup. Ct. 271, 37 L. Ed. 123 ..... 336, 337
Noonan, In re, 3 Biss. 491, Fed. Cas. No. 10,292 105
Norcross v. Cambridge, 166 Mass. 508, 44 N. E. 615, 33 L. R. A. 843 346
North American L. & T. Co. v. Watkins, 109 Fed. 101, 48 C. C. A. 254 4
Northern Pac. R. Co., In re, 23 Land Dec. Dep. Int. 204; 25 Land Dec. Dep. Int. 47; 26 Land Dec. Dep. Int. 265, 488 ..... 406, 408
Northern Pac. R. Co. v. Babcock, 154 U. S. 190, 198, 199, 14 Sup. Ct. 978, 981, 38 L. Ed. 958 ..... 232, 233
Northern Pac. R. Co. v. Freeman, 174 U. S. 380, 384, 19 Sup. Ct. 763, 43 L. Ed. 1014 626
Northern Pac. R. Co. v. Mares, 123 U. S. 710, 719, 721, 8 Sup. Ct. 321, 31 L. Ed. 296 526
North Penn. Co. v. Kirk, 90 Pa. 17 603
Northwestern Life Assur. Co. v. Schulz, 94 Ill. App. 156, 161, 163 480
Nurnberger v. U. S., 84 C. C. A. 377, 156 Fed. 721 542
Nutt v. Knut, 200 U. S. 12, 26 Sup. Ct. 216, 50 L. Ed. 348 659

Ogilvie v. Merriam Co. (C. C.) 149 Fed. 858 598
Old Colony R. Co. v. Miller, 125 Mass. 1, 3, 28 Am. Rep. 194 345
Olsen v. Oregon, etc., Co., 9 Utah, 129, 140, 33 Pac. 623 521
Omaha Water Co. v. Schamel, 147 Fed. 502, 78 C. C. A. 68 490
Orchard v. Alexander, 157 U. S. 372, 383, 15 Sup. Ct. 635, 39 L. Ed. 737 411
Oregon, etc., R. Co. v. U. S., 189 U. S. 103, 110, 112, 113, 23 Sup. Ct. 615, 47 L. Ed. 726 408
Orient Ins. Co. v. Leonard, 57 C. C. A. 176, 120 Fed. 808 523
Orphan Asylum Soc. v. McCartee, Hopk. Ch. (N. Y.) 429 397
O'Sullivan v. People, 144 Ill. 604, 32 N. E. 192, 20 L. R. A. 143 583

Pacheco v. Judson Mfg. Co., 113 Cal. 541, 45 Pac. 833 528
Pacific Steam Whaling Co. v. Alaska Packers' Ass'n, 138 Cal. 632, 636, 72 Pac. 161 229
Paine v. Loeb, 96 Fed. 167, 37 C. C. A. 434 567
Parkman v. Welch, 19 Pick. (Mass.) 231, 234 340
Parks v. Boston, 15 Pick. (Mass.) 190, 198, 209, 210, 211 ..... 344, 345
Parmly v. Bank, 3 Edw. Ch. (N. Y.) 395 398
Parsons v. Bedford, 3 Pet. 433, 446, 448, 7 L. Ed. 732 480

Digitized by Google

Page

Patrick v. Bowman, 149 U. S. 421, 13 Sup. Ct. 866, 37 L. Ed. 790..... 567
Patton v. J. M. Brunswick & Balk Co., 23 Fla. 283, 2 South. 366, 367..... 340
Patton v. Texas & P. R. Co., 179 U. S. 658, 663, 21 Sup. Ct. 275, 45 L. Ed. 361.. 234
Payne v. Hook, 7 Wall. 425, 19 L. Ed. 260 199
Payne v. Railroad, 136 Mo. 583, 38 S. W. 308 133
Payne v. Snell, 3 Mo. 409..... 576
Pearce, Matter of, 21 Vt. 611, Fed. Cas. No. 10,873..... 285
Pearce v. Buell, 22 Or. 29, 29 Pac. 78.... 218
Peck v. Heurich, 167 U. S. 624, 629, 17 Sup. Ct. 927, 42 L. Ed. 302..... 481
Pegler v. Hyde Park, 176 Mass. 101, 57 N. E. 327..... 345
Penfield v. Potts & Co., 126 Fed. 475, 480, 61 C. C. A. 371..... 608
Pennsylvania, The, 19 Wall. 125, 22 L. Ed. 148..... 667
Pennsylvania Co. v. Roy, 102 U. S. 451, 26 L. Ed. 141..... 247
Pennsylvania R. R. v. Adams, 55 Pa. 499 603
Penrose v. Doherty, 70 Ark. 256, 67 S. W. 398 476
People v. Beeler, 6 Cal. 246..... 301
People v. Court of Oyer & Terminer, 101 N. Y. 245, 247, 4 N. E. 259, 54 Am. Rep. 691 583
People v. McKane, 78 Hun, 154, 160, 28 N. Y. Supp. 981..... 583
People v. New York Cent. R. Co., 29 N. Y. 430..... 302
People v. Payne, 8 Cal. 341..... 301
People v. Sanford, 43 Cal. 35..... 301
People v. Superior Court of New York, N. Y., 10 Wend. (N. Y.) 285-294..... 33
People's Inv. Co. v. Crawford (Tex. Civ. App.) 45 S. W. 738..... 397
Perkins v. Nichols, 11 Allen (Mass.) 542.. 337
Perry v. Bankers' Life Ins. Co., 47 App. Div. (N. Y.) 567, 570, 62 N. Y. Supp. 553 480
Petrie v. Heller (D. C.) 35 Fed. 310..... 579
Pettibone v. U. S., 148 U. S. 197, 13 Sup. Ct. 542, 37 L. Ed. 419..... 544
Petty v. Railroad, 179 Mo. 666, 78 S. W. 1003 134
Philadelphia & E. R. Co. v. Catawissa R. Co., 53 Pa. 20..... 461
Philip Schneider Brewing Co. v. American Ice Mach. Co., 77 Fed. 138, 23 C. C. A. 89..... 50
Phillips v. Stauch, 20 Mich. 369.....448, 450
Phillips v. Welch, 11 Nev. 187, 190..... 583
Pierson v. Ryerson, 5 N. J. Eq. 202, 203.. 339
Piggott v. Eastern Cos. R. Co., 3 C. B. 229 528
Pitt v. Berkshire Life Ins. Co., 100 Mass. 500 479
Pittsburg, etc., R. Co. v. West, 34 Ind. App. 95, 69 N. E. 1017..... 626
Plumley v. Mass., 155 U. S. 468, 15 Sup. Ct. 156, 39 L. Ed. 223..... 539
Plymouth Cordage Co., In re, 68 C. C. A. 434, 135 Fed. 1000..... 509
Pointer v. U. S., 151 U. S. 396, 397, 400, 14 Sup. Ct. 410, 411, 38 L. Ed. 208..534, 536

Page

Pollard's Lessee v. Hagan, 3 How. 212-223, 11 L. Ed. 565..... 57
Pomeroy v. State Bank of Indiana, 1 Wall. 592, 602, 17 L. Ed. 638..... 251
Pomeroy v. Westfield, 154 Mass. 462, 465, 28 N. E. 899..... 632
Post v. Sup'rs, 105 U. S. 667, 26 L. Ed. 1204 551
Potter v. New Whatcom, 20 Wash. 589, 56 Pac. 394, 72 Am. St. Rep. 135..... 51
Pots & Co. v. Creager, 155 U. S. 597, 15 Sup. Ct. 194, 39 L. Ed. 275..... 121
Pounds v. U. S., 171 U. S. 35, 18 Sup. Ct. 729, 43 L. Ed. 62..... 299
Powers v. Council Bluffs, 45 Iowa, 654, 24 Am. Rep. 792..... 241
Pratt v. Paris Gaslight & Coke Co., 168 U. S. 255, 259, 18 Sup. Ct. 62, 42 L. Ed. 458 .....586, 587
Press Pub. Co. v. McDonald, 63 Fed. 238, 11 C. C. A. 155, 26 L. R. A. 53..... 270
Price v. Forrest, 173 U. S. 410, 423, 19 Sup. Ct. 434, 43 L. Ed. 749..... 661
Price v. St. Louis Mut. Life Ins. Co., 3 Mo. App. 262..... 386
Priestly v. Fowler, 3 M. & W. 1..... 551
Public Clearing House v. Coyne, 194 U. S. 496, 497, 506, 509, 510, 512, 515, 24 Sup. Ct. 789, 793-796, 48 L. Ed. 1092..334, 335, 336
Putnam v. U. S., 162 U. S. 689, 16 Sup. Ct. 923, 40 L. Ed. 1113..... 541

Queen, The, v. Muscot, 10 Mod. 193..... 290
Quinlan v. Utica, 11 Hun (N. Y.) 217.... 528

Railroad Co. v. Andrews, 130 Fed. 67-71, 64 C. C. A. 399..... 626
Railroad Co. v. Baker (Tex. Civ. App.) 58 S. W. 964..... 316
Railroad Co. v. Beale, 73 Pa. 504, 13 Am. Rep. 753..... 493
Railroad Co. v. Burns (Tex. Civ. App.) 63 S. W. 1035..... 316
Railroad Co. v. Cain (Ark.) 104 S. W. 533 626
Railroad Co. v. Camp, 105 Fed. 212, 44 C. C. A. 451..... 316
Railroad Co. v. Chapman, 140 Fed. 129, 71 C. C. A. 523..... 626
Railroad Co. v. Dies, 98 Tenn. 655, 41 S. W. 860..... 417
Railroad Co. v. Dingman, 62 Ark. 245, 35 S. W. 219..... 626
Railroad Co. v. Fraloff, 100 U. S. 24, 31, 25 L. Ed. 531..... 480
Railroad Co. v. Gaither (Tex. Civ. App.) 35 S. W. 179..... 316
Railroad Co. v. George, 94 Ala. 199, 10 South. 145..... 316
Railroad Co. v. Gladmon, 15 Wall. 401, 409, 21 L. Ed. 114..... 520
Railroad Co. v. Graham, 102 S. W. 700.. 622
Railroad Co. v. Hawthorne, 144 U. S. 202, 208, 12 Sup. Ct. 591, 36 L. Ed. 405..... 75
Railroad Co. v. Hill, 146 Ala. 240, 40 South. 612..... 42
Railroad Co. v. Hogeland, 66 Md. 149-161, 7 Atl. 105, 59 Am. Rep. 159..... 494

Digitized by Google

Page

Railroad Co. v. Holloway, 52 C. C. A. 260, 114 Fed. 458 481
Railroad Co. v. Jewett, 37 Ohio St. 649, 659 4
Railroad Co. v. Jones, 130 Ala. 456, 30 South. 586 316
Railroad Co. v. Leathers, 62 Ark. 235, 35 S. W. 216 626
Railroad Co. v. Loeb, 118 Ill. 214, 8 N. E. 460, 59 Am. Rep. 341 241
Railroad Co. v. McClintock, 91 Fed. 223, 33 C. C. A. 466 316
Railroad Co. v. McClurg, 8 C. C. A. 322, 325, 326, 59 Fed. 860, 863 481
Railroad Co. v. McQueeney, 78 Ark. 28, 92 S. W. 1120 622
Railroad Co. v. Miller, 43 C. C. A. 436, 104 Fed. 142 75
Railroad Co. v. Morgan, 132 Ind. 430, 31 N. E. 661, 32 N. E. 85 316
Railroad Co. v. O'Brien, 119 U. S. 99, 103, 7 Sup. Ct. 118, 30 L. Ed. 299 481
Railroad Co. v. O'Reilly, 158 U. S. 334, 337, 15 Sup. Ct. 820, 39 L. Ed. 1006 481
Railroad Co. v. Orr, 91 Ala. 548, 8 South. 363 42
Railroad Co. v. Parker, 5 C. C. A. 220, 222, 55 Fed. 595, 597 75
Railroad Co. v. Prentice, 147 U. S. 101, 13 Sup. Ct. 261, 37 L. Ed. 97 ..... 40, 41, 43
Railroad Co. v. Pugh, 95 Tenn. 419, 32 S. W. 311 416
Railroad Co. v. Roach, 64 Ga. 635 316
Railroad Co. v. Russ, 6 C. C. A. 597, 57 Fed. 822 43
Railroad v. Shearer, 58 Ala. 678 36
Railroad Co. v. Smith (Tex. Civ. App.) 82 S. W. 787 316
Railroad Co. v. Waller (Tex. Civ. App.) 62 S. W. 554 316
Railroad Co. v. Wangelin, 152 Ill. 138, 38 N. E. 760 316
Railroad Co. v. Warner, 123 Ill. 38, 14 N. E. 206 316
Railroad Co. v. Zapp (Tex. Civ. App.) 49 S. W. 673 316
Randall v. Baltimore & O. R. Co., 109 U. S. 482, 3 Sup. Ct. 322, 27 L. Ed. 1003 348
Randolph v. Supply Co., 106 Ala. 501, 17 South. 721 280
Rannels v. Rowe, 74 C. C. A. 376, 145 Fed. 296 476
Raymond v. Royal Baking Powder Co., 85 Fed. 231, 236, 29 C. C. A. 245 400
Reagan v. U. S., 157 U. S. 301, 15 Sup. Ct. 610, 39 L. Ed. 709 535
Reed v. Insurance Co., 36 N. J. Eq. 146, 152 339
Reed v. Moore & McFerrin, 153 Fed. 358, 82 C. C. A. 434 127
Reese v. Barker, 85 Ala. 474, 5 South. 305, 306 337
Regina v. Eastern Archipelago Co., 18 Eng. Law & Eq. 167–183 33
Regina v. Yates, Car. & Mar. 132 290
Rex v. Edwards, 9 Barn. & C. 652 583
Rhodes v. U. S., 25 C. C. A. 186, 189, 79 Fed. 740 520

Page

Rice Bros. & Nixon v. National Bank of Commerce, 98 Mo. App. 696, 73 S. W. 930 ..... 644, 645
Rice v. Railroad Co., 24 Minn. 464 398
Richmond & D. R. Co. v. Freeman, 97 Ala. 289, 11 South. 800 87
Rich v. Railroad Co., 149 Fed. 79, 78 C. C. A. 663 626
Rinker v. U. S., 151 Fed. 755, 759, 81 C. C. A. 379, 383 ..... 541, 546
Roberts v. Security Co., Ltd., Q. B. Div. Law Rep. 1897, p. 111,115 479
Roberts v. U. S., 176 U. S. 221, 20 Sup. Ct. 376, 44 L. Ed. 443 354
Robertson v. Moore, 10 Idaho, 115, 77 Pac. 218 281
Robinson v. American Car & Foundry Co. (C. C.) 132 Fed. 166 340
Robinson v. Sampson, 23 Me. 338 218
Robinson v. Stewart, 10 N. Y. 189, 194 339
Rock Land Water Co. v. Tillson, 69 Me. 255 241
Roeber, In re, 62 C. C. A. 122, 127 Fed. 122 509
Roehm v. Horst, 178 U. S. 1, 14, 20 Sup. Ct. 780, 44 L. Ed. 953 ..... 386, 434
Rogers v. Penobscot Min. Co., 83 C. C. A. 380, 154 Fed. 606 ..... 383, 387
Rogers v. U. S., 141 U. S. 548, 554, 12 Sup. Ct. 91, 35 L. Ed. 853 251
Rollins v. Railroad Co., 139 Fed. 639, 71 C. C. A. 615 626
Rose v. Fretz (C. C.) 98 Fed. 112 443
Rosen v. U. S., 161 U. S. 30, 16 Sup. Ct. 434, 40 L. Ed. 606 543
Rosenberger v. Harris (C. C.) 136 Fed. 1001, 1003 337
Rosser, In re, 4 Am. Bankr. Rep. 153, 101 Fed. 562, 41 C. C. A. 497 308
Rouse v. Letcher, 156 U. S. 47, 49, 15 Sup. Ct. 266, 267, 39 L. Ed. 341 87
Rury v. McKay (D. C.) 84 Fed. 360 91
Russel v. Place, 94 U. S. 606, 24 L. Ed. 214 ..... 572, 608
Russell & Birkett, Case of, 101 Fed. 248, 41 C. C. A. 323 87
Russell v. Richmond & D. R. Co. (C. C.) 47 Fed. 204 135
Russell v. Southard, 12 How. 139, 13 L. Ed. 927 672
Russey v. Walker, 32 Ala. 532, 534 340
Ryan v. Railroad Co., 99 U. S. 382, 388, 25 L. Ed. 305 408

St. Louis Cordage Co. v. Miller, 61 C. C. A. 477, 490, 493, 126 Fed. 495, 508, 511, 63 L. R. A. 551 ..... 73, 74, 550
St. Louis, I. M. & S. R. Co. v. Anderson, 62 Ark. 360, 35 S. W. 791 241
St. Louis, I. M. & S. R. Co. v. Morris, 35 Ark. 612 237
St. Louis & S. F. R. Co. v. Bishard, 147 Fed. 496, 78 C. C. A. 62 137
St. Louis & S. F. R. Co. v. Dewees, 153 Fed. 56, 82 C. C. A. 190 ..... 132, 138
St. Paul R. Co. v. U. S., 112 U. S. 733, 28 L. Ed. 861 ..... 659, 661
St. Paul R. Co. v. Winona Railroad, 112 U. S. 720, 731, 733, 5 Sup. Ct. 334, 28 L. Ed. 872 ..... 408, 412

Digitized by Google

Page

Salinger v. Gunn, 61 Ark. 414, 33 S. W. 959 475
Sanborn v. Adair, 29 N. J. Eq. 338, 345.. 339
Savage v. Benham, 17 Ala. 119, 132..... 340
Savannah & M. R. Co. v. Shearer, 58 Ala. 672..... 37
Savings Bank & Trust Co. v. Gelbach, 8 Wash. 497, 36 Pac. 467..... 52
Sawyer v. U. S., 202 U. S. 150, 165, 26 Sup. Ct. 575, 50 L. Ed. 972..... 559
School Dist. v. Holmes, 16 Neb. 486, 20 N. W. 721..... 50
Schroeder v. Chicago & A. R. Co., 108 Mo. 322, 18 S. W. 1094, 18 L. R. A. 827.. 632
Scorpion Silver Min. Co. v. Marsano, 10 Nev. 370.....184, 192
Seefeld v. Chicago, M. & St. P. R. Co., 70 Wis. 216-222, 35 N. W. 278, 5 Am. St. Rep. 168..... 494
Shandrew v. Chicago, M. & St. P. R. Co., 73 C. C. A. 430, 434, 142 Fed. 320, 324 526
Shatto v. Erie R. Co., 121 Fed. 678-682, 59 C. C. A. 1..... 493
Shaw v. Pilling, 175 Pa. 78-87, 34 Atl. 446 488
Shaw Valve Co. v. New Bedford (C. C.) 19 Fed. 753..... 484
Shelby Steel Tube Co. v. Delaware Seamless Tube Co. (C. C.) 151 Fed. 64..... 111
Shelton Logging Co. v. Gosser, 26 Wash. 126, 130, 132, 66 Pac. 151, 153.....185, 193
Shepard v. U. S., 87 C. C. A. 486, 494, 160 Fed. 584, 592.....519, 538, 542, 543
Shepherd v. Thomson, 127 U. S. 494, 8 Sup. Ct. 1250, 32 L. Ed. 163..... 660
Shepley v. Cowan, 91 U. S. 330, 340, 23 L. Ed. 424..... 412
Shickle v. St. Louis Car. Co., 77 Fed. 739, 23 C. C. A. 433..... 117
Shields v. Barrow, 17 How. 130, 139, 15 L. Ed. 158..... 387
Shively v. Bowlby, 152 U. S. 1, 12, 58, 14 Sup. Ct. 548, 38 L. Ed. 331.....227, 228, 229
Shoemaker v. U. S., 147 U. S. 282, 303, 305, 306, 321, 13 Sup. Ct. 361, 37 L. Ed. 170 .....344, 345
Shrunk v. Schuylkill Nav. Co., 14 Serg. & R. (Pa.) 71..... 229
Shufelt v. Flint & P. M. R. Co., 96 Mich. 327, 55 N. W. 1013..... 495
Sibbald v. Bethlehem Iron Co., 83 N. Y. 378, 384, 38 Am. Rep. 441..... 326
Silander v. Gronna, 15 N. D. 552, 108 N. W. 544 .....447, 448
Simmons Creek Coal Co. v. Doran, 142 U. S. 442, 12 Sup. Ct. 239, 35 L. Ed. 1063 .....184, 185
Simmons Mfg. Co. v. Southern Spring Bed Co., 140 Fed. 606, 72 C. C. A. 174.. 612
Singer Mfg. Co. v. June Mfg. Co., 163 U. S. 169, 16 Sup. Ct. 1002, 41 L. Ed. 118 .....259, 400, 401, 402, 598
Sioux City Terminal Co. v. Trust Co., 27 C. C. A. 73, 82 Fed. 124..... 387
Sjoli v. Dreschel, 199 U. S. 564, 565, 568, 26 Sup. Ct. 154, 156, 50 L. Ed. 311; 90 Minn. 108, 95 N. W. 763.....408, 409, 410
Skinner v. Hettrick, 73 N. C. 53..... 229
Skinners Co. v. Irish Soc., 1 Myl. & Cr. 162 398

Page

Smeeth v. Perkins & Co., 125 Fed. 285, 60 C. C. A. 199..... 112
Smelting Co. v. Kemp, 104 U. S. 636, 647, 26 L. Ed. 875.....413, 414
Smith v. Brown, 8 Kan. 609, 619..... 531
Smith v. Burnett, 173 U. S. 430, 19 Sup. Ct. 442, 43 L. Ed. 756..... 595
Smith v. Ferris & C. H. R. Co. (Cal.) 51 Pac. 715, 716..... 179
Smith v. Louisville & N. R. Co., 75 Ala. 449..... 37
Smith v. Northwestern Nat. Life Ins. Co. of Minneapolis, 123 Wis. 586, 102 N. W. 57 436
Smith v. Railroad, 75 Ala. 449.....36, 37
Smith v. Shoemaker, 17 Wall. 630, 639, 21 L. Ed. 717..... 481
Smith v. Smith, 51 N. H. 571..... 644
Smith v. Swormstedt, 16 How. 288, 302, et seq., 14 L. Ed. 942..... 385
Smith v. Vulcan Iron Works, 165 U. S. 518, 17 Sup. Ct. 407, 41 L. Ed. 810..... 7
Snow v. Nelson (C. C.) 113 Fed. 353..... 311
Snyder v. Nederland Life Ins. Co., 202 Pa. 161, 51 Atl. 744..... 479
Southern Minnesota R. Extension Co. v. St. Paul & S. C. R. Co., 5 C. C. A. 249, 255, 55 Fed. 690, 696..... 274
Southern R. Co. v. Bush, 122 Ala. 489, 26 South. 168..... 37
Southern R. Co. v. Simpson, 131 Fed. 705, 65 C. C. A. 563..... 416
South & N. A. R. Co. v. Sullivan, 59 Ala. 272..... 37
Spangler v. Sanborn, 7 Colo. App. 102, 43 Pac. 905..... 352
Specht v. Howard, 16 Wall. 564, 21 L. Ed. 348 247
Speights v. Peters, 9 Gill (Md.) 473..... 398
Spencer v. Lapsley, 20 How. 264, 269, 15 L. Ed. 902..... 413
Spofford v. Kirk, 97 U. S. 484, 24 L. Ed. 1032 .....660, 661
Spring Co. v. Edgar, 99 U. S. 645, 658, 659, 25 L. Ed. 487.....520, 522
Stafford v. Adams, 113 Mo. App. 717, 88 S. W. 1130..... 551
Stahler v. Reading R. Co., 199 Pa. 383, 49 Atl. 273, 85 Am. Rep. 791..... 603
Stanclift v. Fox, 81 C. C. A. 623, 152 Fed. 697 657
Standard Caster & Wheel Co. v. Caster Socket Co., 113 Fed. 162, 51 C. C. A. 109 615
Staple v. Spring, 10 Mass. 72..... 241
Stark v. Starr, 6 Wall. 402, 18 L. Ed. 925 .....192, 193
State v. Bland, 189 Mo. 197, 214, 88 S. W. 28 584
State v. Cooper, 45 Mo. 64..... 302
State v. Dettmer, 124 Mo. 426, 27 S. W. 1117..... 133
State v. Ellvin, 51 Kan. 784, 33 Pac. 547.. 583
State v. Gurley, 170 Mo. 432, 70 S. W. 875 133
State v. Hathaway, 115 Mo. 36, 21 S. W. 1081 538
State v. Knight, 3 S. D. 509, 513, 54 N. W. 412, 44 Am. St. Rep. 809..... 583
State v. Lipscomb, 52 Mo. 33..... 538

Digitized by Google

Page

State v. Martin, 30 Or. 108, 110, 47 Pac. 196 583
State v. Risley, 72 Mo. 609..... 538
State v. Russell, 90 Iowa, 569, 58 N. W. 915, 28 L. R. A. 195..... 302
State v. Wingo, 66 Mo. 181, 27 Am. Rep. 329 302
State Nat. Bank v. Smith, 36 C. C. A. 412, 94 Fed. 605..... 252
State Nat. Bank of Louisiana v. Lyons, 52 Miss. 184..... 450
State, to Use, v. Fargo, 151 Mo. 280, 52 S. W. 199 576
Stearns v. Lawrence, 83 Fed. 738, 28 C. C. A. 66..... 610
Stearns v. U. S., 152 Fed. 901, 82 C. C. A. 48.. 543
Steele v. Fish, 2 Minn. 153 (Gil. 129)..... 193
Stein v. Bowman, 13 Pet. 209, 222, 10 L. Ed. 129..... 558
Stephenson v. Little, 10 Mich. 433..... 655
Stepp v. Chicago, R. I. & P. R. Co., 85 Mo. 235..... 495
Stewart v. Baltimore & O. R. Co., 168 U. S. 445, 448, 18 Sup. Ct. 105, 42 L. Ed. 537 .....232, 233
Stewart v. Barnes, 153 U. S. 456, 14 Sup. Ct. 849, 38 L. Ed. 781..... 20
Stewart v. Lohr, 1 Wash. St. 341, 25 Pac. 457, 22 Am. St. Rep. 150..... 199
Stewart v. Louisville & N. R. Co., 83 Ala. 493, 4 South. 373..... 37
Stewart v. Mackey, 16 Tex. 56, 67 Am. Dec. 609..... 449
Stewart v. Wright, 77 C. C. A. 499, 147 Fed. 321.....635, 638
Stillwell v. Savannah Grocery Co., 88 Ga. 100, 143, 13 S. R. 963, 970..... 6
Stimpson v. Railroad Co., 10 How. 329, 346, 13 L. Ed. 441..... 251
Stitt v. Huidekopers, 17 Wall. 384, 394, 21 L. Ed. 644..... 520
Stokes v. Saltonstall, 13 Pet. (U. S.) 181, 191, 10 L. Ed. 115..... 234
Stowers, In re, 1 Lowell, 528, Fed. Cas. No. 13,516..... 105
Straits of Dover S. S. Co. v. Munson (D. C.) 95 Fed. 690..... 271
Streeter v. Sanitary Dist. of Chicago, 63 C. C. A. 190, 133 Fed. 124..... 252
Summers v. White, 71 Fed. 106, 17 C. C. A. 631..... 88
Sun Printing Ass'n v. Edwards, 121 Fed. 826, 58 C. C. A. 162..... 81
Supreme Council A. L. H. v. Lippincott, 134 Fed. 824, 67 C. C. A. 650, 69 L. R. A. 803..... 436
Suttle v. Railroad Co., 75 C. C. A. 470, 144 Fed. 668..... 581
Suydam v. Williamson, 20 How. 427, 434, 15 L. Ed. 978..... 251

Tacoma School Dist. v. Hedges, 13 Wash. 69, 42 Pac. 523..... 183
Taft Co. v. Century Sav. Bank, 72 C. C. A. 671, 141 Fed. 369, 372..... 509
Taylor-Craig Corp. v. Hage, 69 Fed. 581, 16 C. C. A. 339..... 289
Tennessee, C. I. & R. Co. v. Herndon, 100 Ala. 451, 14 South. 287.....37, 47

Page

Teske v. Dittberner, 70 Neb. 544, 98 N. W. 57, 113 Am. St. Rep. 802..... 448
Teutonia Life Ins. Co. v. Mueller, 77 Ill. 22, 24..... 479
Texas & P. R. Co. v. Archibald, 170 U. S. 665, 671, 672, 18 Sup. Ct. 777, 42 L. Ed. 1188.....74, 521
Texas & P. R. Co. v. Barrett, 166 U. S. 617, 619, 620, 17 Sup. Ct. 707, 41 L. Ed. 1136 77
Texas & P. R. Co. v. Behymer, 189 U. S. 468, 470, 23 Sup. Ct. 622, 47 L. Ed. 905.. 526
Texas & P. R. Co. v. Cox, 145 U. S. 593, 604, 605, 12 Sup. Ct. 905, 908, 36 L. Ed. 829 ... .232, 233
Texas & P. R. Co. v. Swearingen, 196 U. S. 51, 62, 25 Sup. Ct. 164, 49 L. Ed. 382 521
Texas & P. R. Co. v. Watson, 190 U. S. 287, 289, 23 Sup. Ct. 681, 47 L. Ed. 1057.. 528
Thayer v. Hart, Jr. (C. C.) 20 Fed. 693.. 362
Thayer v. Manley, 73 N. Y. 307..... 644
Thimes v. Stumpff, 33 Kan. 53, 5 Pac. 431 .....447, 448
Thomas v. Railroad (C. C.) 81 Fed. 911.. 20
Thompson v. Insurance Co., 104 U. S. 252, 257, 259, 26 L. Ed. 765.....479, 480
Thompson v. Railroad Co., 48 N. J. Eq. 105, 108, 21 Atl. 182..... 583
Thompson v. Second Ave. Traction Co., 93 Fed. 824, 35 C. C. A. 620..... 112
Thomson-Houston Co. v Nassau Electric Co. (C. C.) 110 Fed. 647..... 122
Thorpe v. Thorpe, 70 Vt. 46, 39 Atl. 245.. 449
Throckmorton v. Holt, 180 U. S. 552, 567, 21 Sup. Ct. 474, 45 L. Ed. 663..... 247
Tichenor v Knapp, 6 Or. 205..... 192
Tinicum Fishing Co. v. Carter, 61 Pa. 21, 100 Am. Dec. 597..... 229
Title Guarantee & Trust Co. v. Wrenn, 35 Or. 62, 56 Pac. 271, 76 Am. St. Rep. 454 .....280, 281
Topliff v. Topliff, 145 U. S. 156, 12 Sup. Ct. 825, 36 L. Ed. 658..... 612
Town of Lyons v. Lyons Nat. Bank (C. C.) 8 Fed. 369..... 251
Township of Crescent v. Anderson, 114 Pa. 643-647, 8 Atl. 379, 60 Am. Rep. 367.. 497
Transfer No. 8, The, 96 Fed. 253, 37 C. C. A. 462..... 267
Travis v. Insurance Co., 104 Fed. 486, 43 C. C. A. 653..... 536
Troy v. Cheshire R. Co., 23 N. H. 83, 55 Am. Dec. 177..... 240
Truly v. Wanzer, 5 How. 141, 12 L. Ed. 88 588
Tubbs v. U. S., 105 Fed. 59, 44 C. C. A. 357 542
Twaddell, In re (D. C.) 110 Fed. 147..... 284

Umbria, The, 166 U. S. 404, 417, 17 Sup. Ct. 610, 41 L. Ed. 1053..... 666
Union Bank v. Geary, 5 Pet. (U. S.) 99, 112, 8 L. Ed. 60..... 337
Union Mut. Ins. Co. v. Insurance Co., 24 Fed. Cas. 609, No. 14,372..... 339
Union Pac. R. Co. v. Adams, 33 Kan. 427-430, 6 Pac. 529..... 497
Union Pac. R. Co. v. Daniels, 152 U. S. 684, 691, 14 Sup. Ct. 756, 38 L. Ed. 597.. 77

Digitized by Google

Page

Union Pac. R. Co. v. Harris, 33 Kan. 416, 418, 6 Pac. 571 235
Union Pac. R. Co. v. Rosewater, 84 C. C. A. 616, 157 Fed. 168 632
Union Pac. R. Co. v. Thomas, 152 Fed. 365, 371, 81 C. C. A. 491 247
Union Trust Co. v. Illinois Midland, 117 U. S. 434, 6 Sup. Ct. 809, 29 L. Ed. 963 216
U. S. v. Carll, 105 U. S. 611, 612, 26 L. Ed. 1135 ..... 541, 544, 545, 546
U. S. v. Cook, 17 Wall. 168, 174, 21 L. Ed. 538; 19 Wall. 591, 22 L. Ed. 210 ..... 457, 544, 545
U. S. v. Cruikshank, 92 U. S. 542, 558, 562, 23 L. Ed. 588 ..... 280, 544, 545
U. S. v. De Witt, 9 Wall. 41, 19 L. Ed. 593 539
U. S. v. Eliason, 16 Pet. 291, 301, 10 L. Ed. 968 251
U S. v. Ferguson (C. C.) 54 Fed. 28 340
U S. v. Fisher, 2 Cranch, 358, 2 L. Ed. 304 354
U. S. v. Fletcher, 148 U. S. 84, 13 Sup. Ct. 552, 37 L. Ed. 378 656
U. S. v. Freeman, 3 How. 556-564, 11 L. Ed. 724 461
U. S. v. Gillis, 95 U. S. 407, 416, 24 L. Ed. 503 659
U. S. v. Gooding, 12 Wheat. 460, 473, 6 L. Ed. 693 541
U. S. v. Gratiot, 14 Pet. 526, 538, 10 L. Ed. 573 56
U. S. v Harmon (D. C.) 45 Fed. 419 538
U. S. v. Hess, 124 U. S. 483, 487, 8 Sup. Ct. 571, 573, 31 L. Ed. 516 ..... 544, 545, 547
U. S. v. Hough, 103 U. S. 71, 72, 73, 26 L. Ed. 305 248
U. S. v. Kagama, 118 U. S. 375-381, 6 Sup. Ct. 1109, 30 L. Ed. 228 457
U. S. v. Macdaniel, 7 Pet. 1, 14, 8 L. Ed. 587 655
U. S. v McMasters, 4 Wall. (U. S.) 680, 682, 18 L. Ed. 311 531
U S. v Mills, 7 Pet. 138, 8 L. Ed. 636 545
U. S. v. Mullin (D C.) 71 Fed. 682 655
U. S. v. Nahant, 153 Fed. 520, 525, 82 C. C. A. 470 345
U. S. v. Northern Pac. R. Co., 177 U. S. 435, 20 Sup. Ct. 706, 44 L. Ed. 836 406
U. S. v. Old Settlers, 148 U. S. 427, 480, 13 Sup. Ct. 650, 37 L. Ed. 509 385
U. S. v Rickert, 188 U. S. 432, 23 Sup. Ct. 478, 47 L. Ed. 532 655
U. S. v. Rio Grande Ditch & Irrigation Co., 174 U. S. 690, 702, 19 Sup. Ct. 770, 43 L. Ed. 1136 649
U. S. v. Shea, 152 U. S. 178, 186, 14 Sup. Ct. 519, 38 L. Ed. 403 96
U. S. v. Simmons, 96 U. S. 360, 24 L. Ed. 819 544
U. S. v. Thurston Co., 74 C. C. A. 425, 143 Fed. 287 655
U. S. v. Wilson, Baldw. 78, 119, Fed. Cas. No. 16,730 541
U. S. v. Winans, 198 U. S. 371, 25 Sup. Ct. 662, 49 L. Ed. 1089 649
U. S. v. Wood, 14 Pet. 430, 438, 10 L. Ed. 527 ..... 290, 291, 292, 294
U. S. ex rel. Pitcairn Coal Co. v. Baltimore & O. R. Co. (C. C.) 154 Fed. 108 29

Page

U. S. ex rel. West v. Hitchcock, 205 U. S. 20, 27 Sup. Ct. 423, 51 L. Ed. 718 ..... 656, 657
United States Mut. Acc. Co. v. Robinson, 74 Fed. 10, 20 C. C. A. 262 289

Van Dyke v. Van Dyke, 26 N. J. Eq. 180, 181 ..... 337, 338
Van Gesner v. U. S., 153 Fed. 54, 82 C. C. A. 188 566
Van Gilder v. Hoffman, 22 W. Va. 1 672
Vannice v. Bergen, 16 Iowa, 555, 85 Am. Dec. 531 218
Van Orsdol v. Burlington, C. R. & N. R. Co., 56 Iowa, 470, 9 N. W. 373 241
Van Schoick v. D. & R. Canal Co., 20 N. J Law, 249 241
Van Stone v. Stillwell & Bierce Mfg. Co., 142 U. S. 136, 12 Sup. Ct. 181, 35 L. Ed. 961 281
Venner v. Great Northern R. Co., 209 U. S. 24, 28 Sup. Ct. 328, 52 L. Ed. 666 604
Vicksburg, etc., R. Co. v. Putnam, 118 U. S. 545, 553, 7 Sup. Ct. 1, 30 L. Ed. 257 528
Vicksburg R. Co. v. O'Brien, 119 U. S. 99, 7 Sup. Ct. 118, 30 L. Ed. 299 302
Villa v. Rodriguez, 12 Wall. 323, 20 L. Ed. 406 672
Virginia, T. & C. S. & I. Co. v. Wilder, 88 Va. 942, 946, 14 S. E. 806 6
Vogel v Pekoc, 157 Ill. 339, 42 N. E. 386, 30 L. R. A. 491 281

Wabash R. Co. v. McDaniels, 107 U. S. 454, 461, 2 Sup. Ct. 932, 27 L. Ed. 605 ..... 525, 526
Wabash Screen Door Co. v. Black, 61 C. C. A. 639, 645, 126 Fed. 721 528
W A. Gaines & Co. v. E Whyte Grocery Fruit & Wine Co., 107 Mo. App. 570, 81 S. W. 643 443
Waldron v. Waldron, 156 U. S. 361, 381, 383, 15 Sup. Ct. 383, 39 L. Ed. 453 247
Walker v. Collins, 50 Fed. 737, 1 C. C. A. 642 536
Walker v. House, 4 Md. Ch. 39 398
Walker v. Mercer, 61 Kan. 736-737, 60 Pac. 735 493
Wallace v. Adams, 74 C. C. A. 540, 545, 143 Fed. 716, 721 337
Wallace v. Harris, 32 Mich. 399 450
Warner v. Bacon, 8 Gray (Mass.) 397, 402, 405, 69 Am. Dec. 253 240
Washington, etc., R. Co. v. McDade, 135 U. S. 554, 569, 574, 10 Sup. Ct. 1044, 34 L. Ed. 235 ..... 77, 523
Washington Gas. Co. v. District of Columbia, 161 U. S. 316, 16 Sup. Ct. 564, 40 L. Ed. 712 572
Washington & G. R. Co. v. Harmon, 147 U. S. 571, 13 Sup. Ct. 557, 37 L. Ed. 284 348
Waters-Pierce Oil Co. v. Van Elderen, 137 Fed. 557, 70 C. C. A. 255 134
Watson v. Bonfils, 116 Fed. 157, 53 C. C. A. 535 83
Watson v. Doyle, 130 Ill. 415, 22 N. E. 613 454
Wear v. Mayer (C. C.) 2 McCrary, 172, 6 Fed. 658 251

Digitized by Google

Page

Weatherly v. Water Co., 115 Ala. 156, 22 South. 142..... 397
Webster Loom Co. v. Higgins, 15 Blatchf. 446, Fed. Cas. No. 17,342..... 362
Webster v. Warner, 119 Mich. 461, 78 N. W. 552..... 448
Weitzner v. Thingstad, 55 Minn. 244, 56 N. W. 817..... 448
Welsh v. Anderson, 7 Asp. Mar. Cas. 177 579
West Coast Lumber Co. v. Newkirk, 80 Cal. 275, 22 Pac. 231..... 280
Westinghouse, Church, Kerr & Co. v. Callaghan, 83 C. C. A. 669, 155 Fed. 397 80
Westinghouse Co. v. Burton Co. (C. C.) 70 Fed. 619; 77 Fed. 301, 23 C. C. A. 174.. 592
Westinghouse Electric & Mfg. Co. v. Catskill Illuminating & Power Co., 121 Fed. 831, 834, 58 C. C. A. 167..... 362
Westinghouse Electric & Mfg. Co. v. Saranac Lake Electric Light Co. (C. C.) 108 Fed. 221, 223..... 362
Westinghouse, etc., v. Mutual Life Ins. Co. (C. C.) 129 Fed. 213, 216..... 362
Wetmore, In re (D. C.) 99 Fed. 703; 108 Fed. 523, 47 C. C. A. 477.....284, 285
Wheeler v. Wason Mfg. Co., 135 Mass. 294, 298..... 523
White v. Crow, 110 U. S. 183, 4 Sup. Ct. 71, 28 L. Ed. 113. 224
White v Wansey, 116 Fed. 347, 53 C. C. A. 634..... 536
White v. Wiggins, 32 Ala. 424..... 340
Whiting v. Sullivan, 7 Mass. 107..... 646
Whitman v. Fisher, 98 Me. 575, 577, 578, 57 Atl. 895..... 497
Wiborg v. U. S., 163 U. S. 633, 656, 16 Sup. Ct. 1127, 41 L. Ed. 289..... 302
Wiggins v. Armstrong, 2 Johns. Ch. (N. Y.) 144..... 397
Wilcox v. McConnell, 13 Pet. 498, 513, 10 L. Ed. 264.....55, 656
Wilder v. St. Paul, 12 Minn. (Gil. 116) 184, 193
Wilkinson v. Bauerle, 41 N. J. Eq. 635, 7 Atl. 514..... 338
Willey v. Portsmouth, 35 N. H. 303..... 528
Williams v. Bankhead, 19 Wall. 563, 571, 22 L. Ed. 184..... 385
Williams v. South & N. A. R. Co., 91 Ala. 635, 9 South. 77.....37, 40, 42, 43, 47
Williscroft v. Cargo (D. C.) 123 Fed. 169 579

Page

Wilson, Ex parte, 114 U. S. 417, 5 Sup. Ct. 935, 29 L. Ed. 89..... 535
Wilson v. Sanford, 10 How. 99, 13 L. Ed. 344 587
Winchester v. Howard, 97 Mass. 303, 305, 93 Am. Dec. 93..... 311
Winkler v. Winkler, 40 Ill. 179..... 398
Winslow v. State, 92 Ala. 78, 9 South. 728 47
Winslow v. Urquhart, 39 Wis. 261..... 282
Winston v. Crowe, 28 Wash. 65, 68 Pac. 174 199
Winter v. City Council, 83 Ala. 589, 3 South. 235, 238..... 337
Winters v. U. S., 207 U. S. 564, 577, 28 Sup. Ct. 207, 212, 52 L. Ed. 340; 143 Fed. 740, 74 C. C. A. 666; 148 Fed. 684, 78 C. C. A. 546.....648, 649, 650
Wisconsin Cent. R. Co. v. Forsythe, 159 U. S. 46, 61, 15 Sup. Ct. 1020, 40 L. Ed. 71..... 337
Wisconsin R. Co. v. Price Co., 133 U. S. 496, 506, 512, 10 Sup. Ct. 341, 33 L. Ed. 687 .....408, 409
Witherspoon v. Duncan, 4 Wall. 210, 218, 219, 18 L. Ed. 339..... 403
W. J Lemp Brewing Co. v. Ort, 113 Fed. 482, 483, 51 C. C. A. 317..... 76
Wolsey v. Chapman, 101 U. S. 755, 769, 25 L. Ed. 915..... 656
Wolsey v. Railroad Co., 33 Ohio St. 227.. 134
Wood v. The Nimrod, Gilp. 83 Fed. Cas. No. 17,959..... 90
Wooden v. Wooden, 3 N. J. Eq. 429..... 398
Woods v. Little, 134 Fed. 232, 67 C. C. A. 160 284
Woods v. Morrell, 1 Johns. Ch. (N. Y.) 103, 106..... 339
Worcester v. Georgia, 6 Pet. 515-544, 8 L. Ed. 483..... 457
Worden v. Seals, 121 U. S. 14, 25, 7 Sup. Ct. 814, 30 L. Ed. 853..... 584
Wortman v. Kleinschmidt, 12 Mont. 316, 30 Pac. 280..... 281
Wright, In re, 2 Ben. 509, Fed. Cas. No. 18,065 605
Wright v. Stewart (C. C.) 130 Fed. 905.. 638

Yates v. Covington, 119 Ky. 228, 83 S. W. 592 528
York v. Conde, 147 N. Y. 486, 42 N. E. 193 661
Young v. French, 35 Wis. 111..... 282

Digitized by Google

CASES PASSED UPON.

CASES IN THE UNITED STATES CIRCUIT COURTS OF APPEALS WHICH HAVE BEEN PASSED UPON BY THE SUPREME COURT OF THE UNITED STATES.

Ingersoll v. Coram.....78 C. C. A. 303
Writ of certiorari. Decree reversed. December 7, 1908, 29 Sup. Ct. 92, 211 U. S. 335, 53 L. Ed. —.

Page v. Rogers.....79 C. C. A. 153
Appeal. Judgment reversed. January 4, 1909, 29 Sup. Ct. 159, 211 U. S. —, 53 L. Ed. —.

CASES ON REHEARING.

CASES IN THE UNITED STATES CIRCUIT COURTS OF APPEALS IN WHICH REHEARINGS HAVE BEEN GRANTED OR DENIED.

G. & C. Merriam Co. v. Ogilvie.....88 C. C. A. 596
Rehearing denied, March 17, 1908.

Digitized by Google

INDEX TO NOTES.

VOLUMES 1-88.

ABANDONMENT.
Of trade-marks and trade-names. 33 C. C. A. 294.
Of railroad right of way. 42 C. C. A. 576.
Of water rights. 45 C. C. A. 190.
Of copyright. 69 C. C. A. 563.
Of invention. 70 C. C. A. 6.

ABATEMENT AND REVIVAL.
Pendency of action in state or federal court as ground for abatement of action in the other. 47 C. C. A. 205; 73 C. C. A. 521.

ACCIDENT INSURANCE.
Risks and causes of loss. 38 C. C. A. 3; 85 C. C. A. 126.

ACTIONS.
Jurisdiction of federal courts as restricted by state laws. 1 C. C. A. 514.
On insurance policy—Time of bringing suit. 2 C. C. A. 473; 35 C. C. A. 404.
Forms of action in federal courts—Following state practice. 5 C. C. A. 598.
Limitation of actions against corporate officers. 53 C. C. A. 7.
By and against receivers and "agents" of national banks. 53 C. C. A. 398.
Bar of action as determined by limitations of state other than that in which action is brought. 58 C. C. A. 186.
Satisfaction of one or more judgments for same cause of action. 67 C. C. A. 322.
Premature commencement of actions. 76 C. C. A. 159.

ADMIRALTY.
Nature of hearing on appeal—Admission of new proof. 3 C. C. A. 322.
Demurrage. 14 C. C. A. 657; 21 C. C. A. 337; 46 C. C. A. 4.
Extinguishment of maritime liens. 17 C. C. A. 102.
Jurisdiction as to matters of contract. 18 C. C. A. 347; 27 C. C. A. 530.
General average. 20 C. C. A. 357.
Jurisdiction to enforce liens under state laws. 21 C. C. A. 21.
Collision rules. 28 C. C. A. 532; 29 C. C. A. 368.
Salvage awards. 30 C. C. A. 280.
Signals of meeting vessels. 30 C. C. A. 630.
Negligence of both master and servant—Division of damages. 30 C. C. A. 678.

ADMIRALTY—Cont'd.
Jurisdiction of suits between foreigners. 37 C. C. A. 193.
Limitation of shipowner's liability. 45 C. C. A. 387.
Statutory exemptions of shipowners from liability. 49 C. C. A. 11.
Demise of vessel. 55 C. C. A. 225.
Collision—Overtaking vessels. 60 C. C. A. 254.
Jurisdiction of torts. 62 C. C. A. 279.
Liability of vessel for injuries caused by creation of swell. 78 C. C. A. 3.

ADVERSE POSSESSION.
Tax deed as color of title. 24 C. C. A. 402.
Acquisition or loss of right to railroad right of way by prescription. 63 C. C. A. 7.

ALIENS.
Citizenship under state and federal laws. 6 C. C. A. 37.
Citizenship of the Chinese. 1 C. C. A. 212; 35 C. C. A. 332.
Citizenship of married women. 65 C. C. A. 5.
Importation of contract labor. 66 C. C. A. 133.

ALTERATION OF INSTRUMENTS.
Discharge of surety by. 66 C. C. A. 6.

APPEAL.
In admiralty—New proofs. 3 C. C. A. 322.
Review of previous decisions as to validity of patents in circuit court of appeals. 3 C. C. A. 565; 27 C. C. A. 427; 32 C. C. A. 484.
Review of interlocutory decree granting or refusing injunction in patent case in circuit court of appeals. 3 C. C. A. 572; 27 C. C. A. 189; 32 C. C. A. 484.
When may be aided by mandamus. 10 C. C. A. 450.
Following state practice. 27 C. C. A. 394.
Finality of judgments and decrees for purposes of review. 2 C. C. A. 379; 17 C. C. A. 238; 28 C. C. A. 482.
Appeal and review in bankruptcy cases. 43 C. C. A. 9.
Appeal or mandamus. 47 C. C. A. 376.
Reduction or increase of amount of recovery on appeal. 48 C. C. A. 470.

Digitized by Google

APPEAL—Cont'd.
Additional proofs in appellate court without trial de novo. 67 C. C. A. 600.
Jurisdiction of lower court to rehear cause or grant new trial after remand by appellate court. 70 C. C. A. 416.
Enforcement of decree of appellate court by mandamus. 77 C. C. A. 409.
Amendment of writ of error, citation, or notice of proceedings for review. 77 C. C. A. 490.

APPEARANCE.
Following state practice. 5 C. C. A. 594.

ARBITRATION AND AWARD.
Arbitration as a condition of an insurance policy. 9 C. C. A. 628; 39 C. C. A. 389.
Setting aside an award for interest, prejudice, or misconduct of arbitrator. 12 C. C. A. 592.
Authority of arbitrators after final award and power to amend, modify, or make new or supplemental award. 85 C. C. A. 506.

ARGUMENTS.
Of counsel upon failure to produce witness. 13 C. C. A. 589.

ASSAULT AND BATTERY.
Mental suffering as element of damages. 11 C. C. A. 521.
Liability of corporations. 39 C. C. A. 14.

ASSIGNEES.
Citizenship as affecting the jurisdiction of the federal courts. 10 C. C. A. 254; 27 C. C. A. 302.

ASSIGNMENT.
Of right to use name as trade-mark. 17 C. C. A. 579; 27 C. C. A. 360.
Of claims against the United States and government contracts. 22 C. C. A. 650.
Liability of transferrors and transferees of corporate stock for assessments. 61 C. C. A. 322.
Of licenses for use or sale of patents. 64 C. C. A. 596.
Subrogation of insurer under assignment of rights of insured. 65 C. C. A. 615.

ASSIGNMENT FOR BENEFIT OF CREDITORS.
Power of corporation to make. 24 C. C. A. 221.
Effect of national bankruptcy act on state insolvency laws and on assignments for benefit of creditors. 51 C. C. A. 11.

ASSOCIATIONS.
Who may be parties in actions by or against associations. 82 C. C. A. 270.

ASSUMPTION OF RISK.
Assumption of risk incident to employment. 38 C. C. A. 314.

ATTACHMENT.
Issuance—Following state practice. 5 C. C. A. 606; 27 C. C. A. 393.

ATTORNEY AND CLIENT.
Arguments of counsel. 13 C. C. A. 589.
Bonds, securities, and other papers subject to lien for services. 32 C. C. A. 229.
Liability of attorneys for contempt. 48 C. C. A. 7.
Comments of counsel and instructions on failure of accused to testify. 54 C. C. A. 373.
Authority of attorney after judgment. 67 C. C. A. 130.
Compensation of attorney on premature termination of employment. 69 C. C. A. 113.
Expert testimony as to value of services. 74 C. C. A. 257.

AWARD.
Setting aside for interest, prejudice, or misconduct of arbitrator. 12 C. C. A. 592.

BAGGAGE.
Responsibility of sleeping-car companies for baggage and valuables. 10 C. C. A. 338.
Limitation of liability by carrier for passenger's baggage. 32 C. C. A. 308.

BANKRUPTCY.
Jurisdiction of federal courts in suits relating to bankruptcy. 11 C. C. A. 313.
What persons are subject to bankruptcy law. 42 C. C. A. 4.
Appeal and review in bankruptcy cases. 43 C. C. A. 9.
Franchises and licenses as assets in bankruptcy. 43 C. C. A. 389.
Effect of national bankruptcy act on state insolvency laws and on assignments for benefit of creditors. 51 C. C. A. 11.

BANKS AND BANKING.
Jurisdiction of federal courts in suits against national banks. 11 C. C. A. 315.
Who liable as shareholders in national banks. 15 C. C. A. 130; 46 C. C. A. 503.
Personal liability of directors. 12 C. C. A. 680; 33 C. C. A. 230.
Deposits in bank after insolvency. 43 C. C. A. 588.
Enforcement of statutory liability of stockholders in national banks. 52 C. C. A. 6.

Digitized by Google

BANKS AND BANKING—Cont'd.
Actions by and against receivers and "agents" of national banks. 53 C. C. A. 398.
Lien of banks on stock. 56 C. C. A. 179.
Taxation of bank deposits. 60 C. C. A. 413.
Right to proceeds of collection on insolvency of collecting bank. 69 C. C. A. 333.
Knowledge or notice acquired by officer or agent of bank in private business or outside scope of duties as affecting its liability. 84 C. C. A. 139.

BILLS OF LADING.
Perils of the sea. 19 C. C. A. 465.

BOARDS OF TRADE.
Quotations of prices and transactions on exchanges. 61 C. C. A. 2.

BONDS.
Bona fide purchasers of municipal bonds. 41 C. C. A. 6.
Death of surety. 49 C. C. A. 591.
Rights and remedies of holders of invalid municipal securities. 66 C. C. A. 235.

BREACH OF MARRIAGE PROMISE.
Effect of existing marriage on subsequent contract to marry. 50 C. C. A. 583.

BROKERS.
Right to compensation from both parties. 84 C. C. A. 7.

BUILDING AND LOAN ASSOCIATIONS.
Statutory exemptions from operation of usury laws. 36 C. C. A. 343.
What law governs usury. 51 C. C. A. 519.

CANCELLATION.
Of patent to public land. 22 C. C. A. 38.
Of certificates of corporate stock. 55 C. C. A. 167.
Cancellation, surrender, or rescission of charter of vessel. 61 C. C. A. 569.

CARRIERS.
Duty to protect passengers from dangerous fellow passengers. 4 C. C. A. 231.
Right to restrain or expel disorderly passenger. 4 C. C. A. 231.
Duties and liabilities of sleeping-car companies. 10 C. C. A. 335; 34 C. C. A. 386.
Liability for injuries caused by negligence or torts of servants. 10 C. C. A. 466; 27 C. C. A. 651.
Duty to stop trains at station. 14 C. C. A. 362.
Quick dispatch—Demurrage. 14 C. C. A. 657; 21 C. C. A. 342.
Contracts other than for carriage. 20 C. C. A. 521.

CARRIERS—Cont'd.
Who are common carriers of goods. 20 C. C. A. 521.
Liability as warehousemen. 20 C. C. A. 529.
Duty to trespasser on train. 31 C. C. A. 76.
Liabilities to employés of others carried under contract with carrier. 31 C. C. A. 164.
Persons assisting passengers. 31 C. C. A. 164.
Rights of licensee on train. 31 C. C. A. 164.
Rights of person traveling on pass. 31 C. C. A. 164; 32 C. C. A. 306.
Burden of proof of negligence where passengers have been injured. 32 C. C. A. 23.
Live stock—Evidence admissible in actions for injuries through negligence or accident. 32 C. C. A. 148.
Limitations of liability for personal injuries to passengers and for baggage. 32 C. C. A. 301.
Continuance of passenger relation. 40 C. C. A. 437.
Liability of railroads or street car companies for ejection of trespassers. 51 C. C. A. 578.
Injuries to railroad passengers while occupying positions other than regular seats. 54 C. C. A. 4.
Use of carriers' premises by hack and cab drivers, hotel runners, etc. 57 C. C. A. 367.
Regulations of charges by carrier for long and short hauls. 60 C. C. A. 542.
Duties and liabilities of carriers as to furnishing facilities for transportation. 61 C. C. A. 414.
Negligence in ejection of persons under disability. 62 C. C. A. 422.
Liabilities of connecting carriers for injuries to passengers. 64 C. C. A. 485.
Relation of carrier to persons carried under contract with their employers. 67 C. C. A. 427.
Liabilities to employés of others carried under contract with carrier. 85 C. C. A. 5.

CERTIFICATES.
Of receivers. 26 C. C. A. 350.
Of corporate stock—Cancellation. 55 C. C. A. 167.

CERTIORARI.
From supreme court. 1 C. C. A. 5.

CHARITIES.
Liabilities of charitable institutions for negligence. 47 C. C. A. 134.

CHARTER.
Implied warranty of seaworthiness. 15 C. C. A. 388; 60 C. C. A. 179.
Cancellation, surrender, or rescission of charter of vessel. 61 C. C. A. 569.

CHATTEL MORTGAGES.
Controlling effect of state decisions in United States courts. 11 C. C. A. 88.

Digitized by Google

CHILD.
Death of parent by wrongful act—Damages. 1 C. C. A. 34.
Imputed negligence. 34 C. C. A. 4.
Age as affecting contributory negligence. 37 C. C. A. 362.

CHINESE.
Citizenship. 1 C. C. A. 212; 35 C. C. A. 332.

CIRCUIT COURTS.
Review of jurisdiction of circuit courts. 48 C. C. A. 351.
Jurisdiction of, as determined by the amount in controversy. 19 C. C. A. 75; 36 C. C. A. 459.

CIRCUIT COURTS OF APPEALS.
Certiorari from supreme court. 1 C. C. A. 5.
Jurisdiction. 1 C. C. A. 6; 32 C. C. A. 475.
Effect of previous decisions as to validity of patents. 3 C. C. A. 565; 27 C. C. A. 427; 32 C. C. A. 484.
Review of interlocutory decrees in patent cases. 3 C. C. A. 572; 27 C. C. A. 189; 32 C. C. A. 484.
Orders, decrees, and judgments reviewable. 13 C. C. A. 374.
Enjoining proceedings in state courts. 16 C. C. A. 90; 27 C. C. A. 575; 63 C. C. A. 437.
Conflicts of jurisdiction between federal and state courts. 22 C. C. A. 356; 26 C. C. A. 49.
Jurisdiction on habeas corpus. 25 C. C. A. 11.
Review of jurisdiction of circuit courts. 48 C. C. A. 351.

CITIZENSHIP.
Of Chinese. 1 C. C. A. 212; 35 C. C. A. 332.
Of aliens under state and federal laws. 6 C. C. A. 37.
Of corporations. 6 C. C. A. 174; 10 C. C. A. 249; 27 C. C. A. 301.
Diverse citizenship as a ground of federal jurisdiction. 10 C. C. A. 249; 27 C. C. A. 298.
Of married women. 65 C. C. A. 5.

COLLISION.
As a peril of the sea. 19 C. C. A. 468.
Collision rules—Speed of steamers in fog. 28 C. C. A. 532.
Collision rules—Speed of sailing vessels in fog. 29 C. C. A. 368.
Signals of meeting vessels. 30 C. C. A. 630.
Overtaking vessels. 60 C. C. A. 254.

COLOR OF TITLE.
Tax deed as color of title. 24 C. C. A. 402.

COMMERCE.
Taxation of interstate commerce by state. 8 C. C. A. 492.

COMMERCE—Cont'd.
Jurisdiction of federal courts of suits under interstate commerce act. 11 C. C. A. 318.
State laws interfering with interstate or foreign commerce—Exclusion, regulation, and taxation of foreign corporations. 24 C. C. A. 13.
Inspection, quarantine, and sanitary regulations interfering with interstate commerce. 59 C. C. A. 191.

CONSPIRACY.
Liabilities of corporations. 39 C. C. A. 17.
Admissibility, on trial of joint indictments, of acts and declarations of conspirators and codefendants after accomplishment of object. 74 C. C. A. 472.
Judgment against one defendant sued jointly for conspiracy. 80 C. C. A. 245.

CONSTITUTIONAL LAW.
Due process of law in revenue proceedings. 8 C. C. A. 398.
Regulation of commerce by taxation. 8 C. C. A. 492.
Restrictions on grants. 14 C. C. A. 6.
Limitations of taxing power. 23 C. C. A. 515.
Interference with interstate or foreign commerce. 24 C. C. A. 13.
Constitutional limitations of municipal indebtedness. 36 C. C. A. 6.
Trial by jury in criminal prosecutions. 39 C. C. A. 275.
Impairing obligation of contract for exemption from taxation. 70 C. C. A. 294.
Imposition of penalty, extra allowance of damages, costs, or fees as denial of equal protection of law. 72 C. C. A. 547.
Validity of laws alleged to impair charter or franchise of corporation as dependent on reservation of power to alter or amend. 77 C. C. A. 281.

CONTEMPT.
Liability of attorneys. 48 C. C. A. 7.

CONTRACT LABOR.
Importation. 66 C. C. A. 133.

CONTRACTS.
Implied obligation to pay for benefits received. 2 C. C. A. 488.
Jurisdiction of federal courts as to laws impairing obligation of contract. 11 C. C. A. 316.
Relating to use of trade-name. 14 C. C. A. 104.
Mutuality in. 15 C. C. A. 543.
Intent as an element in offer and acceptance. 16 C. C. A. 199.
Admiralty jurisdiction over. 18 C. C. A. 347; 27 C. C. A. 530.
Of common carriers other than for carriage. 20 C. C. A. 521.

Digitized by Google

CONTRACTS—Cont'd.
Restraining competition in bidding for public works at judicial sales, etc. 28 C. C. A. 192.
For lobby services. 29 C. C. A. 446.
Breach of executory contract—Accrual of right to sue. 30 C. C. A. 210.
Divisibility of contracts. 30 C.C.A. 467.
Of persons non compos mentis under guardianship. 34 C. C. A. 264.
Monopolistic contracts—Validity as affected by public policy. 9 C. C. A. 666; 34 C. C. A. 486.
Marketable title. 40 C. C. A. 592.
Sufficiency of expression of consideration in memorandum within statute of frauds. 46 C. C. A. 183.
Persons entitled to enforce specific performance. 47 C. C. A. 493.
Enforcement of contracts requiring performance of continuous acts. 49 C. C. A. 103.
Discharge of surety on building contract by change in obligation or duty of principal. 52 C. C. A. 427.
Marriage by mutual agreement. 52 C. C. A. 581.
Restraining breach of contract of employé not to engage in competing business. 53 C. C. A. 492.
Validity of contracts with public officers as affected by legality of object or consideration. 56 C. C. A. 10.
For sale of things to be produced or manufactured. 58 C. C. A. 363.
Merger of contracts. 60 C. C. A. 6.
Relating to liability of master for negligence causing injury to or death of servant. 62 C. C. A. 5.
Enforcement of contracts of which time is the essence. 63 C. C. A. 562.
Relation of carrier to persons carried under contract with their employers. 67 C. C. A. 427.
Impairing obligation of contract for exemption from taxation. 70 C. C. A. 294.
Practical construction of contracts by parties. 73 C. C. A. 392.
Validity of laws alleged to impair charter or franchise of corporation as dependent on reservation of power to alter or amend. 77 C. C. A. 281.
Rights and liabilities of parties contracting with trusts or combinations in restraint of trade. 78 C. C. A. 612.
Remote or speculative profits as element of damages for breach of contract. 81 C. C. A. 546.
Misrepresentation and concealment by vendee of goods as to financial condition as affecting contract of sale. 87 C. C. A. 126.
Validity of conditions in contracts of conditional sale of personalty. 87 C. C. A. 538.

CONTRIBUTION.
On marine loss—General average. 20 C. C. A. 357.

COPYRIGHTS.
Laches as a defense in suits for infringement. 22 C. C. A. 211; 36 C. C. A. 613.
Matter subject to copyright. 58 C. C. A. 273.
Dedication to public or abandonment of copyright. 69 C. C. A. 563.
Infringement by use of extracts and quotations. 76 C. C. A. 475.
Rights of authors to control of publication, disposition or use of their productions independent of statutory copyright. 77 C. C. A. 620.

CORPORATIONS. See "Banks and Banking."
Citizenship for purposes of federal jurisdiction. 6 C. C. A. 174; 10 C. C. A. 249; 27 C. C. A. 298.
Status of foreign corporations. 7 C. C. A. 419.
Dissolution of foreign corporation. 7 C. C. A. 421.
Jurisdiction of federal courts in suits against federal corporations. 11 C. C. A. 314.
Personal liability of directors for negligence. 12 C. C. A. 680; 33 C. C. A. 230.
The power of officers and directors in their individual capacity to deal with corporation. 13 C. C. A. 466.
Use of corporate name as trade-name. 17 C. C. A. 579; 27 C. C. A. 357.
Stockholders' liability to creditors in equity. 23 C. C. A. 315; 33 C. C. A. 23.
Exclusion, regulation, and taxation of foreign corporations. 24 C. C. A. 13.
Power to assign for benefit of creditors. 24 C. C. A. 221.
Foreign corporations "doing business" in state. 33 C. C. A. 585; 72 C. C. A. 622.
Liability for torts. 39 C. C. A. 9.
Rights and liabilities of pledgees of stock. 42 C. C. A. 135.
Service of process on foreign corporations. 45 C. C. A. 3; 78 C. C. A. 473.
Acts of corporators and promoters. 46 C. C. A. 576.
Power to form partnership. 50 C. C. A. 131.
Effect of judgment against corporation in action to enforce stockholder's liability. 52 C. C. A. 305.
Limitation of actions against corporate officers. 53 C. C. A. 7.
Cancellation of certificates of corporate stock. 55 C. C. A. 167.
Liability of transferrors and transferees of corporate stock for assessments. 61 C. C. A. 322.
Liabilities enforceable against reorganized corporations. 62 C. C. A. 147.
Acquisition by corporation of stock of other corporation. 68 C. C. A. 120.

Digitized by Google

CORPORATIONS—Cont'd.
Evidence of membership in corporation. 72 C. C. A. 423.
Liabilities of corporate officers for debts and acts of corporation as dependent on knowledge or participation. 75 C. C. A. 492.
Powers of committees of directors or trustees of corporations. 76 C.C.A. 7
Validity of laws alleged to impair charter or franchise of corporation as dependent on reservation of power to alter or amend. 77 C. C. A. 281.
Liability of corporation succeeding to partnership for debts of firm. 80 C. C. A. 560.
Rights and liabilities of stockholders of railroads on consolidation. 81 C. C. A. 480.
Rights of stockholders to sue or defend on behalf of corporation as dependent on refusal of corporation or officers to act. 87 C. C. A. 390.
Compliance with charter, constitutional or statutory requirements as to increase of capital stock. 88 C. C. A. 369.

COSTS.
Right to costs in equity. 17 C. C. A. 368.
Imposition of extra allowance of costs, or fees as denial of equal protection of law. 72 C. C. A. 547.

COUNTERFEITING.
Nonmailable matter. 30 C. C. A. 86.

COURTS. See "Federal Courts."
Dicta. 64 C. C. A. 361.

CREDIT.
Loss of as element of damages. 62 C. C. A. 612.

CREDIT INSURANCE. 19 C. C. A. 271; 34 C. C. A. 165.

CRIMINAL LAW. See "Rewards."
Practice on trial before jury. 26 C. C. A. 528.
Trial by jury in criminal prosecutions. 39 C. C. A. 275.
Prosecution and punishment of accessories. 44 C. C. A. 326.
Power of court to revise sentence. 46 C. C. A. 412.
Restraining criminal proceedings. 51 C. C. A. 133.
Proof of corpus delicti to corroborate a confession. 53 C. C. A. 278.
Comments of counsel and instructions on failure of accused to testify. 54 C. C. A. 373.
Preliminaries to introduction of secondary evidence in criminal prosecutions. 61 C. C. A. 117.
Discontinuance, nolle prosequi, or dismissal as bar to subsequent prosecution. 68 C. C. A. 4.
Consolidation of and trial of indictments together. 69 C. C. A. 287.
Review, by trial court, of evidence given before grand jury. 69 C. C. A. 488.

CRIMINAL LAW—Cont'd.
Circumstantial evidence of corpus delicti. 70 C. C. A. 156.
Admission on joint trial, of evidence competent only against one or part of defendants. 73 C. C. A. 295.
Admissibility, on trial of joint indictments, of acts and declarations of conspirators and codefendants after accomplishment of object. 74 C. C. A. 472.
Effect of acquittal in criminal prosecution on liability in tort for alleged criminal act. 79 C. C. A. 407.
Right of accused to be confronted by witnesses. 80 C. C. A. 116.
Computation of cumulative sentences. 81 C. C. A. 196.
Admissibility of written instruments in criminal prosecutions as dependent on preliminary proof. 82 C. C. A. 8.
Commencement of period of limitations against prosecutions for continuing offenses. 84 C. C. A. 519.
Identity of offenses charged in requisition for extradition and indictment, and immunity from prosecution for other offense. 85 C. C. A. 275.
Waiver of objections to instructions in criminal prosecutions. 88 C. C. A. 302.

CUSTOMS AND USAGES.
Presumptions. 56 C. C. A. 394.
Existence of custom or usage as question for jury. 83 C. C. A. 9.

CUSTOMS DUTIES.
Interpretation of commercial and trade terms in tariff laws. 18 C. C. A. 545.

DAMAGES.
Mental suffering as an element of damage in general. 11 C. C. A. 556.
For mental suffering for delay in delivery of telegram. 11 C. C. A. 571; 15 C. C. A. 250; 28 C. C. A. 62.
Delay in transmission of telegraphic message. 14 C. C. A. 177.
Measure of, in actions against telegraph companies. 15 C. C. A. 235; 28 C. C. A. 59.
In condemnation proceedings. 16 C. C. A. 468.
For personal injuries as affected by plaintiff's character and condition. 27 C. C. A. 138.
Negligence of both master and servant —Division of damages in admiralty. 30 C. C. A. 678.
Liability of corporations for exemplary or punitive damages. 39 C. C. A. 18.
Punitive damages for death by wrongful act. 44 C. C. A. 259.
Reduction or increase of amount of recovery on appeal. 48 C. C. A. 470.
Persons entitled to damages for wrongful enforcement of tax. 54 C. C. A. 550.
Aggravation of disease or injury due to existing disease, predisposition, or physical condition. 54 C. C. A. 645.
Loss of credit as element of damages. 62 C. C. A. 612.

Digitized by Google

DAMAGES—Cont'd.
Mitigation of damages for wrongful discharge from employment by failure of servant to seek or accept other employment. 64 C. C. A. 5.
Retraction, apology, or reparation as ground for mitigation of damages for libel and slander. 71 C. C. A. 315.
Imposition of penalty, extra allowance of damages, costs or fees as denial of equal protection of law. 72 C. C. A. 547.
Remote or speculative profits as element of damages for breach of contract. 81 C. C. A. 546.

DEATH BY WRONGFUL ACT.
Mental suffering as element of damages. 11 C. C. A. 563.
Punitive damages. 44 C. C. A. 259.
What law governs actions. 47 C. C. A. 606.

DECREES.
Power of court to amend or modify interlocutory orders and decrees. 61 C. C. A. 236.

DEDICATION.
Of copyright to public. 69 C. C. A. 563.

DEEDS.
Names of parties. 23 C. C. A. 146.
Construction and operation of conveyances of real property and interests therein by executors or administrators. 74 C. C. A. 382.

DEMURRAGE.
Quick dispatch. 14 C. C. A. 657; 21 C. C. A. 342.
Definition and general principles. 21 C. C. A. 337; 46 C. C. A. 4.

DEPOSITION.
Conformity to state practice. 5 C. C. A. 602; 27 C. C. A. 392; 71 C. C. A. 110.
Use of deposition when deponent is present. 50 C. C. A. 232.
Irregularities in taking or return of depositions as ground for exclusion as evidence. 73 C. C. A. 608.

DICTA.
Of courts. 64 C. C. A. 361.

DIRECTORS.
Personal liability for negligence. 12 C. C. A. 680; 33 C. C. A. 230.

DISCOVERY.
Conformity to state practice. 5 C. C. A. 594; 27 C. C. A. 393.
Persons against whom production and inspection of books or writings may be obtained. 81 C. C. A. 96.

DISMISSAL AND NONSUIT.
Discontinuance, nolle prosequi, or dismissal as bar to subsequent prosecution. 68 C. C. A. 4.

DISSOLUTION.
Of foreign corporations. 7 C. C. A. 421.
Of municipal corporations—Effect on indebtedness. 33 C. C. A. 506.

DIVORCE.
Separation agreements. 38 C. C. A. 608.

DOMICILE.
Effect of change of domicile on the question of diverse citizenship. 10 C. C. A. 251.

DOWER.
How inchoate right extinguished. 3 C. C. A. 316.
In mines. 3 C. C. A. 316.
What estate subject to dower. 3 C. C. A. 316.
Divestiture of inchoate right by legislative action. 4 C. C. A. 295.

ELECTION OF REMEDIES.
Against undisclosed principal or agent. 77 C. C. A. 166.

ELECTRICITY.
Liability for injuries from defects in installation of electric wires and appliances in building. 87 C. C. A. 5.

EMINENT DOMAIN.
Consequential and indirect damages. 16 C. C. A. 468.
Nature of estate or interest acquired in condemnation proceedings. 53 C. C. A. 604.
Nature and extent of power of United States to condemn property for public use. 70 C. C. A. 653.
Proceedings under power of eminent domain as civil suits under laws relating to removal of causes to federal courts. 73 C. C. A. 183.

EQUITY.
Right to costs. 17 C. C. A. 368.
Equitable mortgages. 18 C. C. A. 458.
Stockholders' liability to creditors of corporation. 23 C. C. A. 315; 33 C. C. A. 23.
Compensation of masters in chancery. 27 C. C. A. 475.
Conclusiveness and effect of judgments as between courts of law and equity. 50 C. C. A. 463.
Obtaining possession or establishing title to personal property in equity. 58 C. C. A. 101.
Operation and effect of decision in equitable suit for infringement of patent. 68 C. C. A. 541.
He, who comes into equity, must come with clean hands. 70 C. C. A. 543.

ESTOPPEL.
As against state or United States. 16 C. C. A. 353.

EVIDENCE.
New proofs on appeal in admiralty. 3 C. C. A. 322.

Digitized by Google

EVIDENCE—Cont'd.
Rules of evidence in federal courts—Following state practice. 5 C. C. A. 594.
Examination of party before trial—Conformity to state practice. 5 C. C. A. 602.
Excluded from bill of exceptions. 14 C. C. A. 248.
Burden of proof of negligence where passenger has been injured. 32 C. C. A. 23.
Evidence admissible to show injury to live stock, during transportation, through negligence or accident. 32 C. C. A. 148.
Judicial notice of public laws and regulations. 44 C. C. A. 4.
Use of deposition when deponent is present. 50 C. C. A. 232.
Negative testimony. 52 C. C. A. 82.
As to character or reputation in civil actions. 55 C. C. A. 7.
Presumptions as to customs and usages. 56 C. C. A. 394.
Utility, extent of use, and commercial success as evidence of invention. 59 C. C. A. 620.
Preliminaries to introduction of secondary evidence in criminal prosecutions. 61 C. C. A. 117.
Additional proofs in appellate court without trial de novo. 67 C. C. A. 600.
Presumptions and burden of proof as to cause of loss or injury to goods shipped by vessel, and diligence or negligence of carrier. 68 C. C. A. 398.
Review, by trial court, of evidence given before grand jury. 69 C. C. A. 488.
Circumstantial evidence of corpus delicti. 70 C. C. A. 156.
Procedure of federal courts and adoption of state practice as to taking proof. 71 C. C. A. 110.
Evidence of membership in corporation. 72 C. C. A. 423.
Admission on joint trial, of evidence competent only against one or part of defendants. 73 C. C. A. 295.
Irregularities in taking or return of depositions as ground for exclusion as evidence. 73 C. C. A. 608.
Expert testimony as to value of services. 74 C. C. A. 257.
Admissibility, on trial of joint indictments, of acts and declarations of conspirators and codefendants after accomplishment of object. 74 C. C. A. 472.
Inferences from evidence as dependent on sufficiency and degree of proof. 74 C. C. A. 561.
Evidence of emancipation of child. 75 C. C. A. 393.
Photographs as evidence in civil actions. 78 C. C. A. 145.
Weight and sufficiency of evidence of willful burning by insured as a defence to action on policy. 79 C. C. A. 455.

EVIDENCE—Cont'd.
Persons against whom production and inspection of books or writings may be obtained. 81 C. C. A. 96.
Admissibility of written instruments in criminal prosecutions as dependent on preliminary proof. 82 C. C. A. 8.
Application of doctrine of res ipsa loquitur in actions for injuries to servants. 82 C. C. A. 121.
Presumptions and burden of proof of invention. 87 C. C. A. 264.

EXCEPTIONS, BILL OF.
Time of filing—When regulated by state practice. 5 C. C. A. 594.
Exclusion of evidence from. 14 C. C. A. 248.

EXCHANGES.
Membership in stock exchange as an asset in bankruptcy. 43 C. C. A. 389.
Quotations of prices and transactions on exchanges. 61 C. C. A. 2.

EXECUTIVE DEPARTMENTS.
Regulations of. 26 C. C. A. 239.

EXECUTORS AND ADMINISTRATORS.
Citizenship as affecting the jurisdiction of the federal courts. 10 C. C. A. 252.
Probate jurisdiction of federal courts. 36 C. C. A. 276.
Construction and operation of conveyances of real property and interests therein by executor or administrator. 74 C. C. A. 382.

EXTINGUISHMENT.
Of maritime liens. 17 C. C. A. 102.

EXTRADITION.
Scope of review on habeas corpus to procure release of person sought to be extradited. 62 C. C. A. 506.
Fugitives from justice under extradition laws. 63 C. C. A. 104.
Identity of offenses charged in requisition for extradition and indictment, and immunity from prosecution for other offense. 85 C. C. A. 275.

FEDERAL COURTS.
Jurisdiction of circuit courts of appeals in general. 1 C. C. A. 6; 32 C. C. A. 475.
Jurisdiction as affected by state laws. 1 C. C. A. 513.
Jurisdiction of circuit court of appeals to review interlocutory decrees in patent cases. 3 C. C. A. 572; 27 C. C. A. 189; 32 C. C. A. 484.
Conformity of practice in common-law actions to that of state court. 5 C. C. A. 594; 27 C. C. A. 392.
Jurisdiction over corporations. 6 C. C. A. 174.
State laws as rules of decision in federal courts. 11 C. C. A. 71; 29 C. C. A. 553.

Digitized by Google

FEDERAL COURTS—Cont'd.
Diverse citizenship as a ground of federal jurisdiction. 10 C. C. A. 249; 27 C. C. A. 298.
Jurisdiction in cases involving federal question. 11 C. C. A. 308; 35 C. C. A. 7.
Jurisdiction and judgments of Indian courts. 11 C. C. A. 468.
Federal jurisdiction of suits against state. 13 C. C. A. 165.
Orders, decrees, and judgments reviewable in circuit court of appeals. 13 C. C. A. 374.
Jurisdiction as affected by possession of the subject-matter. 15 C. C. A. 6.
Enjoining proceedings in state courts. 16 C. C. A. 90; 27 C. C. A. 575; 63 C. C. A. 437.
Lack of jurisdiction of United States circuit court. 16 C. C. A. 507.
Removal of causes—Separable controversy. 18 C. C. A. 86; 35 C. C. A. 155.
Jurisdiction in admiralty as to matters of contract. 18 C. C. A. 347; 27 C. C. A. 530.
Jurisdiction of circuit courts as determined by the amount in controversy. 19 C. C. A. 75; 36 C. C. A. 459.
Jurisdiction in admiralty to enforce liens created by state laws. 21 C. C. A. 21.
Conclusiveness of judgment between federal and state courts. 21 C. C. A. 478; 49 C. C. A. 468.
Conflict of jurisdiction with state courts. 22 C. C. A. 356.
Jurisdiction in mortgage foreclosure. 24 C. C. A. 523.
Jurisdiction on habeas corpus. 25 C. C. A. 4.
Mandamus to enforce payment of judgment against municipality. 25 C. C. A. 475.
Suits by and against receivers of. 26 C. C. A. 49.
Jury trial—Province of court and jury. 26 C. C. A. 528.
Supplementary and ancillary proceedings and relief. 36 C. C. A. 195.
Probate jurisdiction. 36 C. C. A. 276.
Admiralty jurisdiction of suits between foreigners. 37 C. C. A. 193.
Enjoining proceedings in federal courts. 45 C. C. A. 591.
Pendency of action in state or federal court as ground for abatement of action in the other. 47 C. C. A. 205; 73 C. C. A. 521.
Review of jurisdiction of circuit courts. 48 C. C. A. 351.
Waiver of right as to district in which suit may be brought. 52 C. C. A. 192, 87 C. C. A. 634.
Procedure of federal courts and adoption of state practice as to taking proof. 71 C. C. A. 110.
Legal and equitable remedies and proceedings on removal from state court. 75 C. C. A. 4.

FEDERAL COURTS—Cont'd.
Fraudulent joinder of parties to prevent removal of cause to federal court. 78 C. C. A. 362.
Jurisdiction of federal courts to enforce or remove liens or incumbrances on property of parties not inhabitants of nor found in district of suit. 80 C. C. A. 7.

FEDERAL QUESTIONS.
As conferring jurisdiction on United States courts. 11 C. C. A. 308; 35 C. C. A. 7.

FEES.
Imposition of extra allowance of costs, or fees as denial of equal protection of law. 72 C. C. A. 547.

FELLOW SERVANTS.
Who are. 8 C. C. A. 668; 31 C. C. A. 286.
Concurrent negligence of master and fellow servant. 40 C. C. A. 236.

FERRIES.
As carriers. 20 C. C. A. 536.

FIDELITY INSURANCE. 19 C. C. A. 273.

FIRES.
As a peril of the sea. 19 C. C. A. 472.
Presumption of negligence from railroad fires. 41 C. C. A. 370.
Fire escapes on buildings. 64 C. C. A. 217.
What constitutes loss by fire under insurance policy. 72 C. C. A. 3.

FORECLOSURE.
In federal courts. 24 C. C. A. 523.
Distribution of proceeds. 29 C. C. A. 639.

FOREIGN CORPORATIONS.
Status under the rule of comity. 7 C. C. A. 419.
Dissolution. 7 C. C. A. 421.
Exclusion—Regulation and taxation. 24 C. C. A. 13.
What constitutes "doing business" in state. 33 C. C. A. 585; 72 C. C. A. 622.
Service of process. 45 C. C. A. 3; 78 C. C. A. 473.

FORMER JEOPARDY.
Discontinuance, nolle prosequi, or dismissal as bar to subsequent prosecution. 68 C. C. A. 4.

FRANCHISES.
As assets in bankruptcy. 43 C. C. A. 389.

FRAUD.
In use of trade-marks and trade-names. 17 C. C. A. 579, 657; 20 C. C. A. 165; 30 C. C. A. 380.
Nonmailable matter. 30 C. C. A. 86.

Digitized by Google

FRAUD—Cont'd.
Liabilities of corporations. 39 C. C. A. 16.
Misrepresentation and concealment by vender of goods as to financial condition as affecting validity of contract of sale. 87 C. C. A. 126.

FRAUDS, STATUTE OF.
Sufficiency of expression of consideration in memorandum within statute. 46 C. C. A. 183.

GARNISHMENT.
Following state practice. 5 C. C. A. 606; 27 C. C. A. 393.
Of receivers. 26 C. C. A. 49.
Nature of rights acquired by garnishment proceedings. 76 C. C. A. 270.
Of debts and demands not due. 85 C. C. A. 373.

GENERAL AVERAGE.
Marine insurance. 20 C. C. A. 357.

GIFTS.
Revocation of gifts causa mortis. 54 C. C. A. 143.

GRAND JURY.
Review by trial court, of evidence given before grand jury. 69 C. C. A. 488.

GUARANTY.
Discharge of guarantor by discharge of principal without payment or satisfaction. 78 C. C. A. 266.

GUARANTY INSURANCE. 19 C. C. A. 271.

GUARDIAN AND WARD.
Citizenship as affecting the jurisdiction of the federal courts. 10 C. C. A. 253; 27 C. C. A. 300.

HABEAS CORPUS.
Jurisdiction of federal courts. 25 C. C. A. 4.
Scope of review on habeas corpus to procure release of persons sought to be extradited. 62 C. C. A. 506.

HEALTH.
Inspection, quarantine, and sanitary regulations interfering with interstate commerce. 59 C. C. A. 191.

HOMESTEAD.
Rights acquired by homestead settlements and entries on public lands. 59 C. C. A. 434.

HOSPITALS.
Liability for negligence. 47 C. C. A. 134.

HUSBAND AND WIFE.
Liability of husband for negligence and torts of wife. 12 C. C. A. 196.
Paraphernal property. 31 C. C. A. 40.
Separation agreements. 38 C. C. A. 608.

HUSBAND AND WIFE—Cont'd.
Citizenship of married women. 65 C. C. A. 5.
Rights of action between. 79 C. C. A. 306.

IMPLICATION.
Repeal of statutes by implication. 38 C. C. A. 136.

IMPROVEMENTS.
Rights of co-tenant as to improvements made under mistaken belief of perfect title. 69 C. C. A. 19.

INDEBTEDNESS.
Constitutional and statutory limitations of municipal indebtedness. 36 C. C. A. 6.

INDEPENDENT CONTRACTORS.
Negligence of employés. 28 C. C. A. 392.

INDIANS.
Jurisdiction and judgments of Indian courts. 11 C. C. A. 468.
Citizenship of. 27 C. C. A. 298.

INDICTMENT AND INFORMATION.
Consolidation of and trial of indictments together. 69 C. C. A. 287.

INFANTS.
Imputed negligence. 34 C. C. A. 4.
Age as affecting contributory negligence. 37 C. C. A. 362.
Implied emancipation of child. 71 C. C. A. 629.
Evidence of emancipation of child. 75 C. C. A. 393.

INJUNCTION.
Restraining proceedings in state courts. 16 C. C. A. 90; 27 C. C. A. 575; 63 C. C. A. 437.
Jurisdiction of Circuit Court of Appeals to review interlocutory decrees. 32 C. C. A. 481.
Restraining pollution of water courses. 37 C. C. A. 544.
Right of taxpayer to enjoin misuse of public funds and property. 38 C. C. A. 458.
Restraining proceedings in federal courts. 45 C. C. A. 591.
Restraining criminal proceedings. 51 C. C. A. 133.
Restraining breach of contract of employé not to engage in competing business. 53 C. C. A. 492.
Persons entitled to restrain wrongful enforcement of tax. 54 C. C. A. 550.
Restraining enforcement of judgment pending establishment or enforcement of set-off or counterclaim. 58 C. C. A. 532.
Grounds for denial of preliminary injunctions in patent infringement suits. 72 C. C. A. 123.
Restraining boycotts, strikes, and other combinations by employés interfering with commerce or business. 86 C. C. A. 313.

Digitized by Google

INJURIOUS NOTICES.
Nonmailable matter. 30 C. C. A. 93.

INNKEEPERS.
Fire escapes on buildings. 64 C. C. A. 217.
Liabilities for personal injuries to guests. 66 C. C. A. 483.

INSANE PERSONS.
Contracts of persons non compos mentis under guardianship. 33 C. C. A. 264.
Effect of insanity on the question of suicide in insurance suits. 16 C. C. A. 623; 28 C. C. A. 284.

INSOLVENCY.
Effect of national bankruptcy act on state insolvency laws and on assignments for benefit of creditors. 51 C. C. A. 11.
Right to proceeds of collection on insolvency of collecting bank. 69 C. C. A. 333.

INSPECTION.
Of public records. 49 C. C. A. 210.
Inspection, quarantine, and sanitary regulations interfering with interstate commerce. 59 C. C. A. 191.
Duty of servant to inspect appliances and places for work. 65 C. C. A. 370.

INSURANCE.
Accident insurance—Risks and causes of loss. 38 C. C. A. 3; 85 C. C. A. 126.
Conditions in policy as to time for bringing suit. 2 C. C. A. 473; 35 C. C. A. 404.
Conditions of policy—Arbitration. 9 C. C. A. 628; 39 C. C. A. 389.
Authority of insurance agent to walve prepayment of premiums. 13 C. C. A. 292.
Suicide as a defense to a life policy. 16 C. C. A. 623; 28 C. C. A. 284.
Credit insurance. 19 C. C. A. 271; 34 C. C. A. 165.
Guaranty insurance. 19 C. C. A. 271.
Fidelity insurance. 19 C. C. A. 273.
Title insurance. 19 C. C. A. 278.
Marine insurance—Perils of the sea. 19 C. C. A. 465.
Marine insurance—General average. 20 C. C. A. 357.
Waiver of condition against other insurance. 27 C. C. A. 46.
Divisibility of contracts. 30 C. C. A. 474.
Waiver by acceptance of premiums. 33 C. C. A. 369.
What constitutes an insurable interest in human life. 39 C. C. A. 632.
Change of beneficiary. 40 C. C. A. 4.
Commencement of risk. 41 C. C. A. 273.
What law governs policies. 46 C. C. A. 287; 83 C. C. A. 100.

INSURANCE—Cont'd.
Authority of insurance agents as to acceptance of risks. 49 C. C. A. 335.
Liability for injuries sustained by assured while engaged in occupation not covered by policy. 51 C. C. A. 434.
Time for notice of loss. 55 C. C. A. 376.
Notice of premiums, dues, and assessments. 59 C. C. A. 317.
Mutual benefit insurance contracts as affected by subsequent provisions and amendments of charter, constitution, or by-laws. 63 C. C. A. 285.
Subrogation of insurer under assignment of rights of insured. 65 C. C. A. 615.
What constitutes loss by fire under insurance policy. 72 C. C. A. 3.
Weight and sufficiency of evidence of willful burning by insured as a defense to action on policy. 79 C. C. A. 455.
Accounting for profits, dividends or surplus of mutual insurance company at instance of policy holders or stockholders. 81 C. C. A. 4.

INTENT.
As an element in offer and acceptance of proposition. 16 C. C. A. 199.

INTERNATIONAL LAW.
Effect of acquisition of territory by United States on laws and property rights therein. 80 C. C. A. 457.

INTERSTATE COMMERCE.
Taxation of by state. 8 C. C. A. 492.
Jurisdiction of federal courts of suits under interstate commerce act. 11 C. C. A. 318.
State laws interfering with interstate commerce. 24 C. C. A. 21.
Inspection, quarantine, and sanitary regulations interfering with interstate commerce. 59 C. C. A. 191.

JUDGMENT.
Method of entering judgment in federal court—Following state practice. 5 C. C. A. 604.
Of federal courts—Jurisdiction as involving federal question. 11 C. C. A. 317.
Giving full faith and credit—Jurisdiction of federal courts. 11 C. C. A. 318.
Rendition on Sunday. 12 C. C. A. 462.
Finality of judgments for purposes of review. 2 C. C. A. 379; 17 C. C. A. 238; 28 C. C. A. 482.
Conclusiveness as between federal and state courts. 21 C. C. A. 478; 49 C. C. A. 468.
Enforcement against municipality by mandamus. 25 C. C. A. 475.
Conclusiveness and effect of judgments as between courts of law and equity. 50 C. C. A. 463.

Digitized by Google

JUDGMENT—Cont'd.
Effect of judgment against corporation in action to enforce stockholder's liability. 52 C. C. A. 305.
Restraining enforcement of judgment pending establishment or enforcement of set-off or counterclaim. 58 C. C. A. 532.
Power of court to amend or modify interlocutory orders and decrees. 61 C. C. A. 236.
Authority of attorney after judgment. 67 C. C. A. 130.
Satisfaction of one or more judgments for same cause of action. 67 C. C. A. 322.
Operation and effect of decision in equitable suit for infringement of patent. 68 C. C. A. 541.
Judgment against one defendant sued jointly for conspiracy. 80 C. C. A. 245.
Deficiency judgments and personal liability on foreclosure of vendors' liens. 82 C. C. A. 488.

JUDICIAL SALES.
On Sunday. 12 C. C. A. 462.
Contracts restraining competition in bidding. 28 C. C. A. 192.

JURISDICTION.
Of federal courts. See "Federal Courts."
Of circuit court of appeals. 1 C. C. A. 6; 32 C. C. A. 475.
Of supreme court. 1 C. C. A. 9. 11.
Diverse citizenship as ground of federal jurisdiction. 10 C. C. A. 249; 27 C. C. A. 298.
Federal question as ground of jurisdiction. 11 C. C. A. 308; 35 C. C. A. 7.
Of Indian courts. 11 C. C. A. 468.
As affected by possession of the subject-matter. 15 C. C. A. 6.
Removal of causes—Separable controversy. 18 C. C. A. 86; 35 C. C. A. 155.
Of circuit courts as determined by the amount in controversy. 19 C. C. A. 75; 36 C. C. A. 459.
Conflict between federal and state courts. 22 C. C. A. 356.
Probate jurisdiction. 36 C. C. A. 276.
Admiralty jurisdiction of suits between foreigners. 37 C. C. A. 193.
Review of jurisdiction of circuit courts. 48 C. C. A. 351.

JURY.
Right to trial by jury in federal court. 5 C. C. A. 603; 26 C. C. A. 528.
Following state practice. 5 C. C. A. 603; 27 C. C. A. 393.
Instructing jury and receiving verdict on Sunday. 12 C. C. A. 462.
Trial by jury in criminal prosecutions. 39 C. C. A. 275.

LACHES.
As a defense in suits for infringement of patents, copyrights, and trademarks. 22 C. C. A. 211; 36 C. C. A. 613.

LAND DEPARTMENT.
Conclusiveness and effect of decisions. 22 C. C. A. 38; 28 C. C. A. 344; 57 C. C. A. 207.

LANDLORD AND TENANT.
Holding over by tenant after expiration of term as affecting liability for rent. 71 C. C. A. 513.
Liabilities of landlord and co-tenant for injuries to property of tenant caused by negligence of co-tenant. 86 C. C. A. 108.

LIBEL AND SLANDER.
Evidence of other offenses and publications in mitigation of damages. 40 C. C. A. 168.
Liabilities of corporations. 39 C. C. A. 15.
Retraction, apology, or reparation as ground for mitigation of damages. 71 C. C. A. 315.

LICENSE.
Implied rights of licensee of a patent. 25 C. C. A. 280.
Rights of licensee on train. 31 C. C. A. 164.
Licenses as assets in bankruptcy. 43 C. C. A. 389.
Sublicenses and assignments of licenses for use or sale of patents. 64 C. C. A. 596.

LIENS.
Maritime liens. 15 C. C. A. 679; 17 C. C. A. 102; 21 C. C. A. 21.
Attorneys' liens. 32 C. C. A. 229.
Maritime liens for torts. 34 C. C. A. 565.
Who are entitled to liens or preferences as laborers or employés. 47 C. C. A. 2.
Lien of banks on stock. 56 C. C. A. 179.
Continuance or revival of mechanics' liens. 71 C. C. A. 17.
Persons entitled to liens against railroads for labor and supplies. 75 C. C. A. 274.
Jurisdiction of federal courts to enforce or remove liens or incumbrances on property of parties not inhabitants of nor found in district of suit. 80 C. C. A. 7.

LIFE INSURANCE.
Suicide as a defense. 16 C. C. A. 623; 28 C. C. A. 284.
Waiver by acceptance of premiums. 33 C. C. A. 369.

LIMITATION OF ACTIONS.
Against corporate officers. 53 C. C. A. 7.

Digitized by Google

LIMITATION OF ACTIONS—Cont'd.
Bar of action as determined by limitations of state other than that in which action is brought. 58 C. C. A. 186.
Commencement of period of limitations against prosecutions for continuing offenses. 84 C. C. A. 519.

LITERARY PROPERTY.
Rights of authors to control of publication, disposition or use of their productions independent of statutory copyright. 77 C. C. A. 620.

LOTTERY.
What constitutes. 12 C. C. A. 346; 85 C. C. A. 580.
Nonmailable matter. 30 C. C. A. 90.

MAIL.
Nonmailable matter. 30 C. C. A. 79.

MALICIOUS PROSECUTION.
Liabilities of corporations. 39 C. C. A. 14.

MANDAMUS.
In aid of appeals. 10 C. C. A. 450.
To enforce payment of judgment against municipality. 25 C. C. A. 475.
Appeal or mandamus. 47 C. C. A. 376.
Enforcement of decree of appellate court by mandamus. 77 C. C. A. 409.

MANUFACTURES.
Liabilities of manufacturers of injurious substances or defective machinery and appliances for injuries to persons other than immediate vendees. 57 C. C. A. 5.
Contracts for sale of things to be manufactured. 58 C. C. A. 363.
Fire escapes on factories. 64 C. C. A. 217.

MARINE INSURANCE.
Perils of the sea. 19 C. C. A. 465.
General average. 20 C. C. A. 357.

MARITIME LIENS.
For supplies and services—Presumption as to credit to vessel. 15 C. C. A. 679.
Waiver and extinguishment. 17 C. C. A. 102.
Created by state laws. 21 C. C. A. 21.
For torts. 34 C. C. A. 565.

MARRIAGE.
Effect of existing marriage on subsequent marriage or contract to marry. 50 C. C. A. 583.
Marriage by mutual agreement. 52 C. C. A. 581.

MASTER AND SERVANT.
Who are fellow servants. 8 C. C. A. 668; 31 C. C. A. 286.

MASTER AND SERVANT—Cont'd.
Liabilities of carriers for injuries caused by negligence or torts of servants. 10 C. C. A. 466; 27 C. C. A. 651.
Who are independent contractors. 28 C. C. A. 392.
Divisibility of contracts for services. 30 C. C. A. 467.
Negligence of both—Division of damages in admiralty. 30 C. C. A. 678.
Duty of railroad companies to furnish safe appliances. 37 C. C. A. 8.
Assumption of risk incident to employment. 38 C. C. A. 314.
Concurrent negligence of master and fellow servant. 40 C. C. A. 236.
Injuries to servant while not on duty. 44 C. C. A. 489.
Duty of railroad companies to block switches. 46 C. C. A. 98.
Who are entitled to liens or preferences as laborers or employés. 47 C. C. A. 2.
What law governs master's liability for injuries to servant. 48 C. C. A. 232.
Liability for injuries to volunteers. 51 C. C. A. 509.
Restraining breach of contract of employé not to engage in competing business. 53 C. C. A. 492.
Contracts relating to liability of master for negligence causing injury to or death of servant. 62 C. C. A. 5.
Mitigation of damages for wrongful discharge from employment by failure of servant to seek or accept other employment. 64 C. C. A. 5.
Fire escapes on buildings. 64 C. C. A. 217.
Duty of servant to inspect appliances and places for work. 65 C. C. A. 370.
Importation of contract labor. 66 C. C. A. 133.
Relation of carrier to persons carried under contract with their employers. 67 C. C. A. 427.
Right to invention as between employer and employé. 71 C. C. A. 221.
Expert testimony as to value of services. 74 C. C. A. 257.
Application of doctrine of res ipsa loquitur in actions for injuries to servants. 82 C. C. A. 121.
Duty of master to promulgate rules as to methods of work. 86 C. C. A. 8.

MASTERS IN CHANCERY.
Compensation. 27 C. C. A. 475.

MECHANICS' LIENS.
Continuance or revival of mechanics' liens. 71 C. C. A. 17.
Persons entitled to liens against railroads for labor and supplies. 75 C. C. A. 274.

MENTAL SUFFERING.
As an element of damages. 11 C. C. A. 556.

Digitized by Google

MENTAL SUFFERING—Cont'd.
Damages for, by delay in delivering telegram. 11 C. C. A. 571; 15 C. C. A. 250; 28 C. C. A. 62.

MINES AND MINING.
Right of dower in mines. 3 C. C. A. 316.
Mining partnerships. 35 C. C. A. 515.
Conclusiveness of patents for mining claims. 28 C. C. A. 346; 48 C. C. A. 674.
Rights under mining location to veins having apexes within claim. 66 C. C. A. 311.
Sufficiency of discovery of mineral characteristics to support mining location. 79 C. C. A. 6.
Partition of mineral rights or lands. 81 C. C. A. 405.

MOBS.
Municipal liability for acts of mobs. 57 C. C. A. 517.

MONOPOLIES.
Constitutional restrictions on grant. 14 C. C. A. 6.
Monopolistic contracts—Validity as affected by public policy. 34 C. C. A. 486.
Rights and liabilities of parties contracting with trusts or combinations in restraint of trade. 78 C. C. A. 612.

MORTGAGES.
Equitable mortgages — Agreement to give a mortgage. 18 C. C. A. 458.
Names of parties in deeds and mortgages. 23 C. C. A. 146.
Foreclosure in federal courts. 24 C. C. A. 523.
Distribution of proceeds on foreclosure. 29 C. C. A. 639.
Taxation of. 31 C. C. A. 467.
Subrogation to rights of mortgagee. 42 C. C. A. 304.

MUNICIPAL CORPORATIONS.
Liability for torts of public officers. 14 C. C. A. 534.
Enforcement of judgment against municipality by mandamus. 25 C. C. A. 475.
Dissolution and reincorporation—Effect on indebtedness. 33 C. C. A. 506.
Constitutional and statutory limitations of municipal indebtedness. 36 C. C. A. 6.
Right of taxpayer to enjoin misuse of public funds and property. 38 C. C. A. 458.
Bona fide purchasers of municipal bonds. 41 C. C. A. 6.
Rights of telegraph and telephone companies to use of streets. 44 C. C. A. 155.
Municipal liability for acts of mobs. 57 C. C. A. 517.
Effect of violation of ordinances limiting speed of trains. 59 C. C. A. 5.
Rights and remedies of holders of invalid municipal securities. 66 C. C. A. 235.

MUNICIPAL CORPORATIONS—Cont'd.
Relative rights of street railroads, and vehicles and pedestrians in use and occupation of streets. 73 C. C. A. 12.
Sufficiency of presentation, service, or filing of claim for personal injuries or notice thereof as condition precedent to action against municipal corporation. 83 C. C. A. 559.

NAMES.
Of parties in deeds and mortgages. 23 C. C. A. 146.
Use of person's name as trade-name. 17 C. C. A. 579; 27 C. C. A. 357.
Of books or other publications as trade-marks or trade-names. 88 C. C. A. 601.

NAVIGABLE WATERS.
Obstruction—Jurisdiction of federal courts. 11 C. C. A. 318.

NEGLIGENCE.
Liabilities of carriers for negligence of servants. 10 C. C. A. 466; 27 C. C. A. 651.
Of wife—Liability of husband. 12 C. C. A. 196.
Personal liability of directors. 12 C. C. A. 680; 33 C. C. A. 230.
In transmission of telegram. 14 C. C. A. 177.
Of independent contractor. 28 C. C. A. 392.
Duty of railroads to give warning signals at crossing. 29 C. C. A. 90.
Of both master and servant—Division of damages in admiralty. 30 C. C. A. 678.
Injuries to trespasser on train. 31 C. C. A. 76.
Injuries to one traveling on pass. 31 C. C. A. 164.
Injuries to licensee on train. 31 C. C. A. 164.
Who are fellow servants. 31 C. C. A. 286.
Burden of proof where passengers have been injured. 32 C. C. A. 23.
Evidence admissible to show injury to live stock through negligence or accident during transportation. 32 C. C. A. 148.
Imputed to infant. 34 C. C. A. 4.
Sleeping-car companies. 34 C. C. A. 386.
Duty of railroad companies to furnish safe appliances. 37 C. C. A. 8.
Age as affecting contributory negligence. 37 C. C. A. 362.
Liabilities of corporations. 39 C. C. A. 15.
Concurrent negligence of master and fellow servant. 40 C. C. A. 236.
Care required of motormen. 40 C. C. A. 361.
Presumption from railroad fires. 41 C. C. A. 370.
Injuries to servant not on duty. 44 C. C. A. 489.
Duty of railroad companies to block switches. 46 C. C. A. 98.

Digitized by Google

NEGLIGENCE—Cont'd.
Liabilities of charitable institutions for negligence. 47 C. C. A. 134.
What law governs master's liability for injuries to servant. 48 C. C. A. 232.
Liability of employer for injuries to volunteers. 51 C. C. A. 509.
Injuries to railroad passengers while occupying positions other than regular seats. 54 C. C. A. 4.
Injuries to persons at public entertainment or exhibition. 56 C. C. A. 502.
Liabilities of manufacturers and venders of injurious substances or defective machinery and appliances for injuries to persons other than immediate vendees. 57 C. C. A. 5.
In ejection of passengers or trespassers under disability. 62 C. C. A. 422.
Liabilities of connecting carriers for injuries to passengers. 64 C. C. A. 485.
Fire escapes on buildings. 64 C. C. A. 217.
Liabilities of innkeepers for personal injuries to guests. 66 C. C. A. 483.
Presumptions and burden of proof as to cause of loss or injury to goods shipped by vessel and diligence or negligence of carrier. 68 C. C. A. 398.
Of driver of vehicle imputed to persons riding with him. 88 C. C. A. 497.

NEUTRALITY LAWS.
Object and scope of neutrality law. 28 C. C. A. 622.

NEW TRIAL.
Following state practice. 5 C. C. A. 605; 27 C. C. A. 393.
Jurisdiction of lower court to rehear cause or grant new trial after remand by appellate court. 70 C. C. A. 416.

NOLLE PROSEQUI.
As bar to subsequent prosecution. 68 C. C. A. 4.

NON COMPOS MENTIS.
Contracts of persons non compos mentis under guardianship. 34 C. C. A. 264.

NONMAILABLE MATTER.
Obscene matter. 30 C. C. A. 79.
Frauds and counterfeiting. 30 C. C. A. 86.
Lotteries. 30 C. C. A. 90.
Injurious notices. 30 C. C. A. 93.
Threatening and dunning postal cards. 30 C. C. A. 94.

NONRESIDENTS.
Taxation of property. 31 C. C. A. 467.

NOTICE.
Sufficiency of notice of dissolution of partnership. 54 C. C. A. 229.
To agent—Adverse interest, fraud, or collusion of agent. 56 C. C. A. 561.

NOTICE—Cont'd.
Time for notice of loss under insurance policy. 55 C. C. A. 376.
Of insurance, premiums, dues, and assessments. 59 C. C. A. 317.
Of application for appointment of receiver. 88 C. C. A. 7.

OBITER DICTUM. 64 C. C. A. 361.

OBSCENE MATTER.
Nonmailable matter. 30 C. C. A. 79.

OFFICE AND OFFICER.
Jurisdiction of federal courts in suits against federal officers. 11 C. C. A. 316.
Torts of public officers. 14 C. C. A. 534.
Liabilities of sureties for acts of officers under color of office. 43 C. C. A. 222.
Validity of contracts with public officers as affected by illegality of object or consideration. 56 C. C. A. 10.

ORDERS.
Power of court to amend or modify interlocutory orders and decrees. 61 C. C. A. 236.

PARAPHERNAL PROPERTY.
What constitutes. 31 C. C. A. 40.

PARENT.
Death of child by wrongful act—Damages. 1 C. C. A. 34.
Implied emancipation of child. 71 C. C. A. 629.
Evidence of emancipation of child. 75 C. C. A. 393.

PARTIES.
Citizenship as affecting the jurisdiction of the federal courts. 10 C. C. A. 254; 27 C. C. A. 298; 32 C. C. A. 479.
Names of, in deeds and mortgages. 23 C. C. A. 146.
Persons entitled to enforce specific performance. 47 C. C. A. 493.
Persons entitled to injunction restraining or damages for wrongful enforcement of tax. 54 C. C. A. 550.
Fraudulent joinder to prevent removal of cause to federal court. 78 C. C. A. 362.
Who may be parties in actions by or against associations. 82 C. C. A. 270.
Necessary or proper parties in suits to foreclose vendors' liens on realty. 83 C. C. A. 359.
Credibility of witnesses or parties testifying as question for jury. 88 C. C. A. 143.

PARTITION.
Of mineral rights or lands. 81 C. C. A. 405.

PARTNERSHIP.
Use of partnership name as tradename. 17 C. C. A. 579; 27 C. C. A. 357.
Mining partnerships. 35 C. C. A. 515.

Digitized by Google

PARTNERSHIP—Cont'd.
Purchase of co-partner's interest. 40 C. C. A. 508.
Liability of partnership for torts of partner. 45 C. C. A. 277.
Power of corporation to form partnership. 50 C. C. A. 131.
Sufficiency of notice of dissolution of partnership. 54 C. C. A. 229.
Liability of corporation succeeding to partnership for debt of firm. 80 C. C. A. 560.

PASSENGERS.
Duty of carrier to protect from dangerous fellow passengers. 4 C. C. A. 231.
Right of carrier to restrain or expel disorderly passenger. 4 C. C. A. 231.
Duties and liabilities of sleeping-car companies towards. 10 C. C. A. 335; 34 C. C. A. 386.
Rights against carriers for injuries caused by negligence or torts of servants. 10 C. C. A. 466; 27 C. C. A. 651.
Rights of persons traveling on a pass. 31 C. C. A. 164.
Burden of proof of negligence for injuries to. 32 C. C. A. 23.
Limitation of carrier's liability for injuries to passengers. 32 C. C. A. 301.
Limitation of carrier's liability for injuries to passenger by condition on ticket. 32 C. C. A. 302.
Limitation of liability by carrier for injuries to passenger traveling on pass. 32 C. C. A. 305.
Limitation of carrier's liability for injuries to baggage. 32 C. C. A. 308.
Continuance of passenger relation. 40 C. C. A. 437.
Injuries to railroad passengers while occupying positions other than regular seats. 54 C. C. A. 4.
Negligence in ejecting passengers under disability. 62 C. C. A. 422.
Liabilities of connecting carriers for injuries to passengers. 64 C. C. A. 485.
Relation of carrier to persons carried under contract with their employers. 67 C. C. A. 427.
Accommodations to passengers on vessels. 68 C. C. A. 630.

PATENTS TO PUBLIC LANDS.
Cancellation. 22 C. C. A. 38.
Conclusiveness of land patents. 28 C. C. A. 346.
Conclusiveness of patents for mining claims. 28 C. C. A. 346; 48 C. C. A. 674.

PATENTS FOR INVENTIONS.
Effect of previous adjudication on circuit court of appeals. 3 C. C. A. 565; 27 C. C. A. 427; 32 C. C. A. 475.
Review of interlocutory decree granting or continuing injunction in circuit court of appeals. 3 C. C. A. 572; 27 C. C. A. 189; 32 C. C. A. 484.

PATENTS FOR INVENTIONS—Cont'd.
Jurisdiction of federal courts in suits relating to patents. 11 C. C. A. 313.
Pleading in infringement suits—Demurrer for want of novelty and invention. 19 C. C. A. 595.
Laches as a defense in suits for infringement. 22 C. C. A. 211; 36 C. C. A. 613.
Power of patentee to control his invention. 25 C. C. A. 280.
Contributory infringement of patents. 43 C. C. A. 485; 86 C. C. A. 206.
Accounting by infringer for profits. 50 C. C. A. 8.
Time for application for reissue. 55 C. C. A. 560.
Utility, extent of use, and commercial success as evidence of invention. 59 C. C. A. 620.
Sublicenses and assignments of licenses for use or sale of patents. 64 C. C. A. 596.
Amendment of application. 68 C. C. A. 239.
Operation and effect of decision in equitable suit for infringement. 68 C. C. A. 541.
Priority and continuance of public use of invention as affecting patentability. 69 C. C. A. 646.
Abandonment of invention. 70 C. C. A. 6.
Right to inventions as between employer and employé. 71 C. C. A. 221.
Grounds for denial of preliminary injunctions in patent infringement suits. 72 C. C. A. 123.
Presumptions and burden of proof of invention. 87 C. C. A. 264.

PAYMENT.
Implied obligation to pay for benefits received. 2 C. C. A. 488.

PENALTIES.
Imposition of penalty, extra allowance of damages, costs, or fees as denial of equal protection of law. 72 C. C. A. 547.

PERILS OF THE SEA.
Damages to ship and cargo by vermin. 18 C. C. A. 231; 19 C. C. A. 473.
Damages to ship and cargo through various causes. 19 C. C. A. 465; 64 C. C. A. 118.

PHYSICIANS AND SURGEONS.
Expert testimony as to value of services. 74 C. C. A. 257.

PLEADING.
Following state practice. 5 C. C. A. 594; 27 C. C. A. 392.
Averments of citizenship to show jurisdiction in federal courts. 10 C. C. A. 261; 27 C. C. A. 303.
In patent infringement suits—Demurrer for want of novelty and invention. 19 C. C. A. 595.
Private statutes. 67 C. C. A. 241.

Digitized by Google

PLEDGES.
Rights and liabilities of pledgees of corporate stock. 42 C. C. A. 135.

POST OFFICE.
Nonmailable matter. 30 C. C. A. 79.

PRACTICE.
As regulated by state laws. 1 C. C. A. 515; 5 C. C. A. 594; 9 C. C. A. 548; 27 C. C. A. 392.

PREJUDICE.
As ground for removal of causes. 8 C. C. A. 95.

PRINCIPAL AND AGENT.
Agency implied from course of dealing. 42 C. C. A. 221.
Liability of principal for torts of agent. 43 C. C. A. 316.
Knowledge of agent as notice to principal—Effect of adverse interest, fraud, or collusion of agent. 56 C. C. A. 561.
Election of remedies against undisclosed principal or agent. 77 C. C. A. 166.

PRINCIPAL AND SURETY.
Liabilities of sureties for acts of officers under color of office. 43 C. C. A. 222.
Death of surety. 49 C. C. A. 501.
Liability of sureties for interest, costs, and attorney's fees. 51 C. C. A. 248.
Discharge of surety on building contract by change in obligation or duty of principal. 52 C. C. A. 427.
Discharge of surety by alteration of instrument. 66 C. C. A. 6.

PROBATE.
Jurisdiction of federal courts. 36 C. C. A. 276.

PROCESS.
Following state practice. 5 C. C. A. 599; 27 C. C. A. 393.
Service on foreign corporations. 45 C. C. A. 3; 78 C. C. A. 473.

PROPERTY.
Obtaining possession or establishing title to personal property in equity. 58 C. C. A. 101.
Distinctions between real and personal property. 82 C. C. A. 602.

PUBLIC FUNDS.
Right of taxpayer to enjoin misuse of public funds and property. 38 C. C. A. 458.

PUBLIC LANDS.
Liability of purchaser holding equitable title to state taxation. 4 C. C. A. 196.
Not subject to state taxation. 4 C. C. A. 196.
Jurisdiction of federal courts in suits under public land laws. 11 C. C. A. 314.

PUBLIC LANDS—Cont'd.
Decisions of land department—Their conclusiveness and effect. 22 C. C. A. 38; 28 C. C. A. 344; 57 C. C. A. 207.
Rights acquired by homestead settlements and entries. 59 C. C. A. 434.
Bona fide purchasers. 67 C. C. A. 13.

PUBLIC POLICY.
As affecting contracts. 9 C. C. A. 666; 34 C. C. A. 486.
Contracts for lobby services. 29 C. C. A. 446.
As affecting monopolistic contracts. 34 C. C. A. 486.

QUIETING TITLE.
Necessity of possession in suits to quiet title. 39 C. C. A. 522.

RAILROADS. See "Carriers."
When land grants taxable. 4 C. C. A. 196.
Duty to give warning signals at crossing. 29 C. C. A. 90.
Rights of trespassers on trains. 31 C. C. A. 76.
Duty of railroad companies to furnish safe appliances. 37 C. C. A. 8.
Location and establishment of stations. 41 C. C. A. 219.
Presumption of negligence from fires. 41 C. C. A. 370.
Injuries to persons at stations. 41 C. C. A. 550.
Abandonment or forfeiture of right of way. 42 C. C. A. 576.
Duty of railroad companies to block switches. 46 C. C. A. 98.
Liability of railroad or street car companies for ejection of trespassers. 51 C. C. A. 578.
Effect of violation of statutes and ordinances regulating speed of trains. 59 C. C. A. 5.
Negligence in ejecting trespassers under disability. 62 C. C. A. 422.
Acquisition or loss of right to railroad right of way by prescription. 63 C. C. A. 7.
Persons entitled to liens against railroads for labor or supplies. 75 C. C. A. 274.
Liabilities of railroads for injuries by fire as affected by management of locomotives. 75 C. C. A. 598.
Rights and liabilities of stockholders of railroads on consolidation. 81 C. C. A. 480.

RECEIVERS.
Citizenship as affecting the jurisdiction of the federal courts. 10 C. C. A. 253.
Actions by and against receivers of federal courts. 26 C. C. A. 49.
Nature of certificates. 26 C. C. A. 350.
Actions by and against receivers and "agents" of national banks. 53 C. C. A. 398.

Digitized by Google

RECEIVERS—Cont'd.
Preservation and prevention of removal of property beyond jurisdiction pending litigation as ground for appointment of receiver. 57 C.C.A. 80.
Notice of application for appointment of receivers. 88 C. C. A. 7.

RECORDS.
Access to public records. 49 C.C.A. 210.

REFERENCE.
Following state practice. 27 C. C. A. 392.

REMOVAL OF CAUSES.
As restricted by state laws. 1 C. C. A. 515.
For prejudice or local influence. 8 C. C. A. 95.
Separable controversy. 18 C. C. A. 86; 35 C. C. A. 155.
Actions against federal receivers. 26 C. C. A. 49.
Distinctions between legal and equitable remedies in actions removed to federal courts. 63 C. C. A. 204.
Waiver of right. 66 C. C. A. 612.
Proceedings under power of eminent domain as civil suits under laws relating to removal of causes to federal courts. 73 C. C. A. 183.
Legal and equitable remedies and proceedings on removal from state court. 75 C. C. A. 4.
Fraudulent joinder of parties to prevent removal. 78 C. C. A. 362.

REPEAL OF STATUTES.
Repeal of statutes by implication. 38 C. C. A. 136.

REVIEW.
Necessity of leave to file bill of review after decision on appeal. 4 C. C. A. 72.
In bankruptcy cases. 43 C. C. A. 9.

REWARDS.
Performance of conditions in and acceptance of offer of reward. 79 C. C. A. 98.

RISKS.
Assumption of risk incident to employment. 38 C. C. A. 314.

SALE.
Of patent. 25 C. C. A. 280.
Divisibility of contracts. 30 C. C. A. 470.
Liabilities of venders of injurious substances or defective machinery and appliances for injuries to persons other than immediate vendees. 57 C. C. A. 5.
Contracts for sale of things to be produced or manufactured. 58 C. C. A. 363.
Transfer of title as dependent on appropriation by seller. 83 C. C. A. 470.

SALE—Cont'd.
What constitutes a contract of conditional sale. 86 C. C. A. 448.
Misrepresentation and concealment by vendee of goods as to financial condition as affecting validity of contract of sale. 87 C. C. A. 126.
Validity of conditions in contracts of conditional sale of personalty. 87 C. C. A. 538.

SALVAGE.
Awards in federal courts. 30 C. C. A. 280.

SEAMEN.
Negligence of both master and servant —Division of damages in admiralty. 30 C. C. A. 678.
Rights and liabilities of seamen as to medical treatment. 83 C. C. A. 186.

SEPARABLE CONTROVERSIES.
As ground for removal of cause. 18 C. C. A. 86; 35 C. C. A. 155.

SEPARATION AGREEMENTS. 38 C. C. A. 608.

SET-OFF AND COUNTERCLAIM.
Restraining enforcement of judgment pending establishment or enforcement of set-off or counterclaim. 58 C. C. A. 532.

SHAREHOLDERS.
In national banks. 15 C. C. A. 130; 46 C. C. A. 503.

SHIPPING.
Quick dispatch. 14 C. C. A. 657; 21 C. C. A. 342.
Implied warranty of seaworthiness. 15 C. C. A. 388; 60 C. C. A. 179.
Damages to ships and cargoes by vermin. 18 C. C. A. 231; 19 C. C. A. 473.
Admiralty jurisdiction over contracts. 18 C. C. A. 347; 27 C. C. A. 530.
Loss by perils of the sea. 19 C. C. A. 465; 64 C. C. A. 118.
General average. 20 C. C. A. 357; 84 C. C. A. 316.
Demurrage. 14 C. C. A. 657; 21 C. C. A. 337; 46 C. C. A. 4.
Who are common carriers of goods by water. 20 C. C. A. 535.
Limitation of owner's liability. 45 C. C. A. 387.
Statutory exemptions of shipowners from liability. 49 C. C. A. 11; 83 C. C. A. 294.
Demise of vessel. 55 C. C. A. 225.
Cancellation, surrender, or rescission of charter of vessel. 61 C. C. A. 569.
Presumptions and burden of proof as to cause of loss or injury to goods shipped by vessel, and diligence or negligence of carrier. 68 C. C. A. 398.
Accommodations to passengers on vessels. 68 C. C. A. 630.

Digitized by Google

SHIPPING—Cont'd.
Capacity or authority of master of vessel to hypothecate or make bottomry bond. 75 C. C. A. 123.
Liability of vessel for injuries caused by creation of swell. 78 C. C. A. 3.
Deductions and offsets from charter hire of vessel. 84 C. C. A. 254.

SIGNALS.
At railroad crossings. 29 C. C. A. 90.

SLEEPING-CAR COMPANIES.
Their duties and liabilities towards their passengers. 10 C. C. A. 335; 34 C. C. A. 386.

SPECIFIC PERFORMANCE.
Persons entitled to enforce specific performance. 47 C. C. A. 493.
Of contracts requiring performance of continuous acts. 49 C. C. A. 103.
Of contracts of which time is the essence. 63 C. C. A. 562.
Necessity of tender of performance. 65 C. C. A. 91.
Conditions and provisions for relief to defendant in decree in action for specific performance. 79 C. C. A. 188.
Right of vendor seeking specific performance of contract to have title perfected pending suit. 80 C. C. A. 354.
Possession and improvements under parol contract for sale or gift of land as ground for specific performance. 81 C. C. A. 276.
Right to specific performance as affected by adequacy of remedy at law. 82 C. C. A. 368.

STATE COURTS. See "Removal of Causes."
Proceedings enjoined by federal courts. 16 C. C. A. 90; 27 C. C. A. 575; 63 C. C. A. 437.
Jurisdiction of state courts to enforce maritime liens under state laws. 21 C. C. A. 21.
Conclusiveness of judgments between federal and state courts. 21 C. C. A. 478; 49 C. C. A. 468.
Conflict of jurisdiction with federal courts. 22 C. C. A. 356.
Restraining proceedings in federal courts. 45 C. C. A. 591.
Pendency of action in state or federal court as ground for abatement of action in the other. 47 C. C. A. 205; 73 C. C. A. 521.

STATES.
Federal jurisdiction in suit against state. 13 C. C. A. 165.
Estoppel against. 16 C. C. A. 353.

STATUTES.
Construction of statutes—State laws as rules of decision in federal courts. 11 C. C. A. 72.

STATUTES—Cont'd.
Constitutional and statutory limitations of municipal indebtedness. 36 C. C. A. 6.
Statutory exemptions of building and loan associations from operation of usury laws. 36 C. C. A. 343.
Repeal of statutes by implication. 38 C. C. A. 136.
Power of legislature to pass curative statutes. 39 C. C. A. 180.
Amendment of amended, repealed, or invalid statutes. 44 C. C. A. 590.
Effect of violation of statutes limiting speed of trains. 59 C. C. A. 5.
Construction of statutes as affected by mistakes in writing, grammar, spelling, and punctuation. 65 C. C. A. 237.
History and passage of statutes and contemporary circumstances as aids to construction. 65 C. C. A. 535.
Pleading private statutes. 67 C. C. A. 241.
Construction and operation of provisos, exceptions and saving clauses. 76 C. C. A. 381.
Validity of laws alleged to impair charter or franchise of corporation as dependent on reservation of power to alter or amend. 77 C. C. A. 281.

STOCKHOLDERS.
Liability to creditors of corporation. 23 C. C. A. 315; 33 C. C. A. 23.
Enforcement of statutory liability of stockholders in national banks. 52 C. C. A. 6.
Effect of judgment against corporation in action to enforce stockholder's liability. 52 C. C. A. 305.
Liability of transferrors and transferees of corporate stock for assessments. 61 C. C. A. 322.
Right of stockholders to sue or defend on behalf of corporation as dependent on refusal of corporation or officers to act. 87 C. C. A. 390.

STREET RAILROADS.
Care required of motormen. 40 C. C. A. 361.
Relative rights of street railroads, and vehicles and pedestrians in use and occupation of streets. 73 C. C. A. 12.

STRIKES.
See "Injunction."

SUBROGATION.
To rights of mortgagee. 42 C. C. A. 304.
Of insurer under assignment of rights of insured. 65 C. C. A. 615.

SUICIDE.
As a defense to a suit for life insurance. 16 C. C. A. 623; 28 C. C. A. 284.

SUNDAY.
As dies non juridicus. 12 C. C. A. 462.

Digitized by Google

SUPREME COURT.
Certiorari to circuit court of appeals. 1 C. C. A. 5.
Jurisdiction. 1 C. C. A. 9, 11.
Review of jurisdiction of circuit courts. 48 C. C. A. 351.

TARIFF LAWS.
Interpretation of commercial and trade terms. 18 C. C. A. 545.

TAXATION.
Of railroad land grants. 4 C. C. A. 196.
Of equitable title to public lands. 4 C. C. A. 196.
Lands of the United States not subject to state taxation. 4 C. C. A. 196.
Due process of law. 8 C. C. A. 398.
Notice of equalization. 8 C. C. A. 400.
Forfeiture for nonpayment. 8 C. C. A. 401.
Regulation and taxation of interstate commerce by state. 8 C. C. A. 492; 24 C. C. A. 21.
Limitations of taxing power from mutual independence of federal and state governments. 23 C. C. A. 515.
Of foreign corporations. 24 C. C. A. 13.
Tax deed as color of title. 24 C. C. A. 402.
Of intangible property of nonresidents. 31 C. C. A. 467.
Persons entitled to injunction restraining or damages for wrongful enforcement of tax. 54 C. C. A. 550.
Of bank deposits. 60 C. C. A. 413.
Impairing obligation of contracts for exemption from taxation. 70 C. C. A. 294.
Place of taxation of property held in trust or other fiduciary capacity. 72 C. C. A. 283.

TELEGRAPHS AND TELEPHONES.
Measure of damages in actions against telegraph and telephone companies. 15 C. C. A. 235; 28 C. C. A. 59.
Damages for mental suffering from delay in delivering telegram. 11 C. C. A. 571; 15 C. C. A. 250; 28 C. C. A. 62.
Delay in transmission of message—Failure to disclose that line was not in working order. 14 C. C. A. 177.
Rights of telegraph and telephone companies to use of streets. 44 C. C. A. 155.

TENANCY IN COMMON.
Rights of co-tenant as to improvements made under mistaken belief of perfect title. 69 C. C. A. 19.

TENDER.
Persons by whom tender may be made. 84 C. C. A. 428.

TERRITORIES.
Effect of acquisition of territory by United States on laws and property rights therein. 80 C. C. A. 457.

THREATENING POSTAL CARDS.
Nonmailable matter. 30 C. C. A. 94.

TITLE.
Rights of co-tenant as to improvements made under mistaken belief of perfect title. 69 C. C. A. 19.
Transfer of title as dependent on appropriation by seller. 83 C. C. A. 470.

TITLE INSURANCE. 19 C. C. A. 278.

TORTS.
Liabilities of carriers for negligence and torts of servants. 10 C. C. A. 466; 27 C. C. A. 651.
Of wife—Liability of husband. 12 C. C. A. 196.
Municipal liability for torts of public officers. 14 C. C. A. 534.
As affecting demurrage. 21 C. C. A. 345.
Maritime liens for torts. 34 C. C. A. 565.
Liability of corporation for torts. 39 C. C. A. 9.
Liability of principal for torts of agent. 43 C. C. A. 316.
Liabilities of charitable institutions for negligence. 47 C. C. A. 134.
Admiralty jurisdiction. 62 C. C. A. 279.
Effect of acquittal in criminal prosecution on liability in tort for alleged criminal act. 79 C. C. A. 407.

TRADE-MARKS AND TRADE-NAMES.
Contracts relating to use. 14 C. C. A. 104.
Assignment of right to use a person's name. 17 C. C. A. 579; 27 C. C. A. 360.
Right to use one's own name. 17 C. C. A. 579; 27 C. C. A. 357.
Use of corporate and firm names. 17 C. C. A. 579; 27 C. C. A. 357.
Use of geographical names. 17 C. C. A. 657; 35 C. C. A. 242.
Unfair competition. 20 C. C. A. 165; 30 C. C. A. 376.
Laches as a defense in suits for infringement. 22 C. C. A. 211; 36 C. C. A. 613.
Misleading or false labels. 29 C. C. A. 250.
Abandonment. 33 C. C. A. 294.
Arbitrary, descriptive, or fictitious character of trade-marks and trade-names. 50 C. C. A. 323.
Names of books or other publications as trade-marks or trade-names. 88 C. C. A. 601.

TRADE SECRETS.
Disclosure. 58 C. C. A. 8.

TRESPASS.
Rights of trespasser on train. 31 C. C. A. 76.
Liabilities of corporations. 39 C. C. A. 15.
Liability of railroads or street car companies for ejection of trespassers. 51 C. C. A. 578.
Negligence in ejecting trespasser under disability. 62 C. C. A. 422.

Digitized by Google

TRIAL.
Jury trial in federal court. 5 C. C. A. 603; 26 C. C. A. 528; 27 C. C. A. 393.
Instructing jury and receiving verdict on Sunday. 12 C. C. A. 462.
Comments of counsel on failure to produce witness. 13 C. C. A. 589.
Trial by jury in criminal prosecutions. 39 C. C. A. 275.
Additional proofs in appellate court without trial de novo. 67 C. C. A. 600.
Operation and effect of motions by both plaintiff and defendant for direction of verdict. 77 C. C. A. 8.
Credibility of witnesses or parties testifying as question for jury. 88 C. C. A. 143.

TRUSTEES.
Citizenship as affecting the jurisdiction of the federal courts. 10 C. C. A. 252; 27 C. C. A. 300.

TRUSTS.
Assets of corporation when trust fund for creditors. 23 C. C. A. 315.
Place of taxation of property held in trust or other fiduciary capacity. 72 C. C. A. 283.

UNITED STATES.
Estoppel against. 16 C. C. A. 353.
Assignment of claims and government contracts. 22 C. C. A. 650.
Nature and extent of power of United States to condemn property for public use. 70 C. C. A. 653.
Effect of acquisition of territory by United States on laws and property rights therein. 80 C. C. A. 457.

USURY.
Statutory exemptions of building and loan associations from operation of usury laws. 36 C. C. A. 343.
What law governs usury by building and loan associations. 51 C. C. A. 319.

VENDOR AND PURCHASER.
Marketable title. 40 C. C. A. 592.
Liabilities of venders of injurious substances or defective machinery and appliances for injuries to persons other than immediate vendees. 57 C. C. A. 5.
Right of vendor seeking specific performance of contract to have title perfected pending suit. 80 C. C. A. 354.
Deficiency judgments and personal liability on foreclosure of vendors' liens. 82 C. C. A. 488.
Necessary and proper parties in suits to foreclose or enforce vendors' liens. 83 C. C. A. 359.

WAIVER.
Of prepayment of insurance premiums. 13 C. C. A. 292.

WAIVER—Cont'd.
Of maritime liens. 17 C. C. A. 102
Of conditions of insurance. 27 C. C. A. 46.
Of defense by acceptance of premiums. 33 C. C. A. 369.
Of trial by jury in criminal prosecutions. 39 C. C. A. 281.
Of right as to district in which suit may be brought. 52 C. C. A. 192, 87 C. C. A. 634.
Of right to remove cause to federal court. 66 C. C. A. 612.
Of objections to instructions in criminal prosecutions. 88 C. C. A. 302

WAR.
The neutrality laws. 28 C. C. A. 622.

WAREHOUSEMEN.
Liability of carriers as. 20 C. C. A. 529.

WATERS AND WATER COURSES.
Pollution of water courses. 37 C. C. A. 538.
Abandonment of water rights. 45 C. C. A. 190.

WIFE.
Death of husband by wrongful act—Damages. 1 C. C. A. 33.
Liability of husband for torts of. 12 C. C. A. 196.

WILLS.
Probate jurisdiction of federal courts. 36 C. C. A. 276.

WITNESS.
Competency in federal courts—Following state practice. 5 C. C. A. 602; 21 C. C. A. 278.
Method of summoning — Following state practice. 5 C. C. A. 602.
Comments of counsel in argument on failure to produce. 13 C. C. A. 589.
Competency of, as to general reputation. 53 C. C. A. 109.
Misconduct of witness with reference to cause on trial as ground for impeachment. 71 C. C. A. 411.
Time for objection to competency of witness. 74 C. C. A. 3.
Impeachment and contradiction of party called as witness by adversary. 74 C. C. A. 142.
Excuses for disobedience of subpœnas. 76 C. C. A. 591.
Right of accused to be confronted by witnesses. 80 C. C. A. 116.
Impeachment of witness by evidence of statements, declarations, or admissions, showing bias or prejudice. 86 C. C. A. 593.
Credibility of witnesses or parties testifying as question for jury. 88 C. C. A. 143.

WRITS.
Form and service of process. 5 C. C A. 594.
Issue and service on Sunday. 12 C. C. A. 462.

Digitized by Google

NOTES IN THIS VOLUME.

Page

Notice of Application for Appointment of Receivers..... 7

Credibility of Witnesses or Parties Testifying as Question for Jury 143

Waiver of Objections to Instructions in Criminal Prosecutions... 302

Compliance with Charter, Constitutional or Statutory Requirements as to Increase of Capital Stock..... 369

Negligence of Driver of Vehicle Imputed to Persons Riding with Him 497

Names of Books or Other Publications as Trade-Marks or Trade-Names 601

Digitized by Google

CASES

ARGUED AND DETERMINED

IN THE

UNITED STATES CIRCUIT COURTS OF APPEALS.

(158 Fed. 42.)

MANN v. GADDIE.

(Circuit Court of Appeals, Fifth Circuit. December 24, 1907.)

No. 1,619.

1. RECEIVERS—APPOINTMENT WITHOUT NOTICE—STATUTES.

Civ. Code Ga. 1895, § 4904, providing that, under extraordinary circumstances, a receiver may be appointed without notice, is merely confirmatory of a principle of equity jurisdiction authorizing the appointment of a receiver without notice in cases of urgent emergency.

[Ed. Note.—For cases in point, see Cent. Dig. vol. 42, Receivers, §§ 54–60.]

2. SAME.

A receiver may be appointed without notice if the defendant is beyond the jurisdiction of the court or cannot be found, or some urgent emergency is shown rendering interference before there is time to give notice necessary to prevent waste, destruction, or loss of the property, or in case notice will jeopardize the safety of the property over which the receivership is to be extended.[1]

3. SAME—PARTNERSHIP—DISSOLUTION AND ACCOUNTING.

The rule that a receiver shall not be appointed without notice except in case of urgent necessity is applicable to a suit by one partner against another for an accounting and for dissolution of the firm.

[Ed. Note.—For cases in point, see Cent. Dig. vol. 42, Receivers, §§ 54–60.]

4. SAME—GROUNDS.

Plaintiff, defendant, and two others formed a partnership for the purchase and sale of timber rights and lands; it being agreed that defendant and W. should secure options on timber and timber lands, and that plaintiff and the fourth member of the firm should secure purchasers therefor. Defendant and W. obtained options, escrow deeds, and leases, but plaintiff and his partner were unable to procure purchasers, whereupon defendant obtained a purchaser and denied plaintiff's right to participate in the profits of the transaction. *Held* insufficient to justify the appointment of a receiver without notice to take charge of such options, etc., in a suit by plaintiff for dissolution of the partnership and for an accounting; it appearing that defendant was solvent and willing to give a bond to secure plaintiff's interest in the profits, if any.

[Ed. Note.—For cases in point, see Cent. Dig. vol. 42, Receivers, §§ 54–60.]

[1] See note at end of case.

Digitized by Google

5. APPEAL—RECEIVERS—APPOINTMENT—STAY.

Act March 3, 1891, c. 517, 26 Stat. 828 [1 U. S. Comp. St. 1901, p. 550], allowing appeals from interlocutory orders appointing receivers, and providing that the proceedings in other respects shall be stayed unless otherwise ordered by the court, or by the appellate court or a justice thereof, is sufficient to afford the defendant relief in a case where receivers are improperly appointed, whether with or without notice.

6. SAME—INTERLOCUTORY ORDERS—JURISDICTIONAL QUESTIONS.

No appeal lies from an order of a federal court refusing to dismiss a case for want of jurisdiction; defendant's objection to the jurisdiction being reviewable only after final decree.

[Ed. Note.—For cases in point, see Cent. Dig. vol. 2, Appeal and Error, §§ 367, 417, 648.]

7. SAME—DISMISSAL OF BILL.

On appeal from an order appointing a receiver, the appellate court will render a final decree dismissing the bill if it appears that there is no equity therein, or that the court has no jurisdiction.

[Ed. Note.—For cases in point, see Cent. Dig. vol. 3, Appeal and Error, § 4575.]

8. COURTS—FEDERAL COURTS—DIVERSE CITIZENSHIP—ARRANGEMENT OF PARTIES.

In a suit in a federal court in which jurisdiction depends on citizenship, the court will arrange the parties as plaintiffs and defendants according to their interest, and, if such arrangement defeats the jurisdiction, the bill will be dismissed.

Appeal from Circuit Court of the United States for the Southern District of Georgia.

For opinions below, see 147 Fed. 955, 960.

Isaac Hardeman, Geo. S. Jones, and A. L. Miller (Miller & Jones, Hardeman & Jones, Haygood & Cutts, and W. A. Wooten, on the brief), for appellant.

John I. Hall and Olin J. Wimberly, for appellee.

Before PARDEE, McCORMICK, and SHELBY, Circuit Judges.

SHELBY, Circuit Judge. This is a suit brought by W. M. Gaddie, alleging that he is a citizen of North Carolina, against Frank R. Mann, Thomas J. Wooten, and C. M. Wise, all citizens of Georgia, the Citizens' Bank of McRae, a corporation under the laws of Georgia, and T. P. Trigg and W. E. White, partners composing the firm of Trigg & White, citizens of Virginia. The bill alleges the making of the following contract:

"Georgia, Telfair County:

"This agreement made and entered into, this 29th day of November, 1904, by and between Frank Mann, Thomas J. Wooten, W. M. Gaddie and C. M. Wise, whereby the said parties are offering for sale a tract of land on the Ocmulgee river (about 17,000 acres) and the said C. M. Wise is to have the sale of said property, and in case of a sale then all parties hereto to share equally in the net profits of said sale.

F. R. Mann.
"Thomas J. Wooten.
"W. M. Gaddie.
"C. M. Wise.

"Witness: A. J. Walker, J. P."

It is alleged that under this contract Mann and Wooten were to secure options on timber and timber lands, and that Wise and Gaddie were to secure purchasers therefor, the profits to be equally divided be-

Digitized by Google

tween the four; that Mann and Wooten secured the options, which, in some instances, consisted of escrow deeds and leases, and that these options, deeds, and leases were placed in the Citizens' Bank of McRae, which was to deliver them when the agreed purchase money was paid; that Gaddie and Mann were unable to find a purchaser, and that in 1906 Mann, in whose name the options were taken, secured a purchaser in Trigg & White, who paid $5,000 in cash, and were ready to pay the balance of the purchase money, and that Mann had excluded and ignored Gaddie and Wise, and was denying that they had any interest in the profits. Gaddie, the complainant, therefore prayed for an injunction to prevent the consummation of the trade with Trigg & White and the delivery of the options, deeds, and leases by the bank, for the appointment of a receiver for the options, deeds, and leases, and for an accounting from Mann for his interest in the contract.

After the bill was filed, orders were made granting an injunction and appointing a receiver. From the interlocutory order appointing a receiver, this appeal is taken.

The 10 assignments of error may be condensed or grouped for the purpose of this decision:

First. The court erred in appointing a receiver and in granting the injunction, and in not accepting a bond tendered by Mann.

Second. The court erred in not dismissing the case for want of jurisdiction.

1. The bill was presented to the judge and indorsed "Filed" on June 29, 1906, and on the same day the judge made an order at chambers appointing J. A. Dunwoody "temporary" receiver, and ordered him to take possession of the property described in the bill and all moneys arising from the sale of any property described in the bill. An injunction was also issued as prayed for. The learned judge in appointing the receiver held that the case made by the bill was one of "urgency, and which, under the provisions of the Georgia Code, render proper the appointment of a receiver." No notice was given the defendants that an application would be made to appoint a receiver. The Georgia statute provides that:

> "Under extraordinary circumstances a receiver may be appointed before and without notice to the trustee or other person having charge of the assets." Civ. Code Ga. 1895, § 4904.

We have had occasion heretofore to decide that this statute is only confirmatory of a principle of equity procedure and jurisdiction. Joseph Dry Goods Co. v. Hecht, 120 Fed. 760, 764, 57 C. C. A. 64. In the absence of this statute, under extraordinary circumstances, a court of equity may appoint a receiver without notice. The extraordinary circumstances referred to in the statute are the exceptional cases which sometimes occur, and which make it necessary that the court should have the power to act without notice to the defendant. A defendant may be beyond the jurisdiction of the court, or cannot be found, or some urgent emergency may be shown rendering interference, before there is time to give notice, necessary to prevent waste, destruction, or loss; or a case may arise in which notice itself would jeopard the safety of the property over which the receivership is extended. Moritz

Digitized by Google

v. Miller, 87 Ala. 331, 6 South. 269. The jurisdiction, without notice, should never be exercised except in cases of imperious necessity, when the complainant's right is clear and can be protected in no other way. This is the rule wherever equity is administered (Alderson on Receivers, § 121), and has been enjoined and enforced by repeated decisions of this court. North American L. & T. Co. v. Watkins, 109 Fed. 101, 48 C. C. A. 254; Cabaniss v. Reco Mining Co., 116 Fed. 318, 54 C. C. A. 190; Joseph Dry Goods Co. v. Hecht, supra.

The rule is, of course, applied in receivership suits by one partner against another. McCarthy v. Peake, 18 How. Pr. 138.

Taking all the averments of the bill as true, no reason is shown for the appointment of a receiver without notice. We heartily indorse an observation of the Supreme Court of Ohio made in a case where the trial court had appointed a receiver without notice to the defendants:

"Under the circumstances of the case, the appointment of the receiver was an unwarranted exercise of judicial power, which it is the duty of this court to reverse and set aside." Railway Co. v. Jewett, 37 Ohio St. 649, 659.

2. Immediately after the making of the foregoing order appointing him receiver, Dunwoody demanded and received of the defendant Mann the option contracts described in the bill.

On July 17, 1906, Frank R. Mann, one of the defendants and the appellant in this court, filed a sworn motion in the court below, in which he alleged that the property in controversy consisted only of escrow deeds and options obtained by him for the purchase in fee simple of various tracts of land upon which there is a heavy growth of hardwood timber, and for options for long-term timber leases on other tracts of land; that all of these deeds and options were obtained from the owners of property by him and at his own expense, and that W. M. Gaddie had no right or interest in them; that some of the options had expired since the filing of complainant's bill; and that the others would soon expire, unless closed according to their terms; that, if the options were permitted to expire, it would result in the loss to him of many thousand dollars; that, if he is permitted to protect his rights in the options, he would be able to make a sale at a profit of several thousand dollars; that under the terms of the orders made by the court he was unable to take any steps to protect his rights and to prevent the options from expiring. He therefore moved the court that he be allowed to give a bond in such terms and upon such conditions as may be fixed by the court, to discharge any judgment or decree that may be recovered by the complainant against him, and that, upon the execution of the bond with such sureties as may be required by the order of the court, the temporary receiver heretofore appointed to take charge of the option contracts, and who now has the same in his possession, be directed to deliver them to this defendant. This motion by Mann to be allowed to give a bond came on to be heard on the 22d of September, 1906. At the same time the court heard the application for the appointment of a permanent receiver as prayed for in the bill, and for the granting of an injunction conformable to the prayer of the bill. The court on that day made a decree overruling and denying the motion of

Digitized by Google

Mann to be permitted to give a bond, and granted the application of the complainant for the appointment of a permanent receiver and the issuance of an injunction.

The claim of the complainant is that he is entitled as a partner to one-fourth of the net profits arising from the sale of certain lands on which the members of the partnership had obtained options. The complainant's claim is based on the written agreement between the partners made November 29, 1904, which is copied in the statement of the case. The complainant contends that the agreement was extended to additional lands—in all about 25,000 acres—and that Mann, through agents, had made a sale of part of these lands, and was endeavoring to deprive the complainant of his rightful share of the net profits. Mann's contention, as shown by the record, is to the effect that no sale was made within the time of the existence of the contract between himself, Gaddie, Wooten, and Wise, and that he now has the right to close the options and sell the lands, and that Gaddie will not be entitled to share in the net profits. The ultimate question to be decided when the case comes on for final decree on the merits is whether or not Gaddie is entitled to share in the net profits as claimed by him. On that question. we intimate no opinion, and refer to it only because it is necessary to do so in considering the assignments of error based on the decree refusing to permit Mann to give bond and appointing a receiver. The purpose of Gaddie's suit is to get a share of the profits arising from the sale of the land and the timber. The object of appointing the receiver is to protect him from loss. If it appear, therefore, that he is in no danger of loss because Mann is able to pay any decree he may obtain, a receiver should not be appointed. There is no ground for the appointment of a receiver where the facts show that, if the complainant obtains a decree, it can be collected—that he is in no danger of pecuniary loss. Alderson on Receivers, p. 640, § 448; Beach on Receivers, § 561.

The averments of the bill are directed towards Mann as the wrongdoer. The fear is that he will close the options, completing the purchase of the lands and timber, and make a sale of them, and not pay to the complainant his one-fourth of the net profits. The bill does not show Mann to be insolvent. It is alleged that the complainant "does not believe" that he owns property amounting to more than $12,000, and that he has not sufficient means to be compelled to respond in damages. Mann makes oath that he is the owner in his own right of $40,000 worth of property, and that he is amply solvent. In this affidavit he renews his offer to give bond for such an amount and upon such terms as may be required by the court. This evidence indicates that Mann is able to respond to any decree that Gaddie may obtain if he sustains his bill by proof. But, if this evidence was not sufficient to show his solvency, it must be remembered that he was in court offering to give a bond to secure the complainant in any sum for which he might obtain a decree.

In reversing an order appointing a receiver in a suit for the settlement of a partnership, the court said:

"It seems to me to be doing injustice to the defendant, in any case, to decide the whole of the disputed facts in favor of the plaintiff, in advance, without

Digitized by Google

proof to sustain his allegations, and especially unjust when the defendant proffers unquestioned security to the plaintiff against any possible loss." Buchanan v. Comstock, 57 Barb. (N. Y.) 568, 581.

In reversing the trial court for refusing a bond and appointing a receiver, the Supreme Court of Appeals of Virginia said:

"In such a case, where the claims are small in comparison with the property sought to be sequestrated, and unascertained, and no notice of the application has been given the defendants, and an offer is made to secure those claims should they be subsequently established by the giving of any bond that may be required, it seems to me that it would be utterly at war with a sound judicial discretion to take the property from the hands of those who have been legally charged with its custody." Va., T. & C. S. & I. Co. v. Wilder, 88 Va. 942, 946, 14 S. E. 806.

In Stillwell v. Savannah Grocery Co., 88 Ga. 100, 143, 13 S. E. 963, 970, Bleckley, C. J., speaking for the court, said: "It may be asserted as a general proposition that a bond with good security is always a better form of protecting creditors likely to be injured by fraud than the appointment of a receiver for property perishable in its nature or expensive to keep. And in most cases the liability of a solvent party without bond and security would itself be preferable to an expensive receivership." In that case the court held, as expressed in the syllabus:

"It was certainly error to appoint a receiver unconditionally, without offering the purchaser the alternative of giving bond and security in lieu of surrendering the property to a receiver."

Alderson, in his recent work on Receivers, says:

"If a partner be given full and adequate security against loss, there is no ground for the appointment of a receiver, inasmuch as the very reason for such an appointment is removed." Alderson on Receivers, § 449.

This principle was indorsed by Judge Simonton in Devereux v. Fleming (C. C.) 47 Fed. 177, and in Low v. Holmes, 17 N. J. Eq. 148.

3. The act which allows appeals from interlocutory orders granting or continuing injunctions or appointing receivers provides:

"That the proceedings in other respects in the court below shall not be stayed, unless otherwise ordered by that court, or by the appellate court or a judge thereof." Act March 3, 1891, c. 517, 26 Stat. 828 [1 U. S. Comp. St. 1901, p. 550].

This provision of the act affords a defendant a remedy in cases where the enforcement of the order would be unjust, and where great injury would occur before the case could be heard on appeal. In this case the defendant, after taking the appeal, applied to this court for an order staying the decree of the court below, and such order was granted upon his giving bond as provided for by the statute. This statute will afford defendants relief, where receivers are improperly appointed, whether with or without notice.

4. A motion was made by the defendant Mann to dismiss the bill for want of jurisdiction. We find in the record, also, a plea to the jurisdiction of the court. There is no decree on either the motion or the plea. In the argument at the bar, it was assumed that the court had overruled these defenses. If that were true, and it so appeared in the record, no appeal could be taken from such orders. The court

Digitized by Google

having refused to dismiss the case for want of jurisdiction, the defendant objecting to the jurisdiction must wait till a final decree before he is allowed an appeal. 2 Foster's Fed. Prac. (3d Ed.) § 503. It is true that, on appeal from an order appointing a receiver, if it appear that there is no equity in the bill, or if it appear that the court has no jurisdiction of the case, the appellate court could and should make a final disposition of the case. Smith v. Vulcan Iron Works, 165 U. S. 518, 17 Sup. Ct. 407, 41 L. Ed. 810. In Arkansas Southeastern Railroad Co. v. Union Sawmill Co. (May 30, 1907) 154 Fed. 304, 83 C. C. A. 224, we applied this rule where it appeared that a necessary party had been omitted, and that bringing such party into the case would defeat the jurisdiction of the court. That the omitted corporation was a necessary party in that case was shown by the contracts set up in the bill, and there was no dispute about its citizenship, for the purposes of jurisdiction, being the same as that of the complainant. In the case at bar the bill makes such allegations as show the jurisdiction of the court, and the evidence is contradictory as to the citizenship of the complainant. The controversy is whether he is a citizen of North Carolina or a citizen of Georgia, and the evidence on the point is in conflict. We are not satisfied that the parties have had full opportunity to present all the evidence they wish to offer on the question. The evidence presented has been by affidavit, affording no opportunity for cross-examination. Under the circumstances, we deem it not advisable to decide the question.

It is also urged that one of the defendants, Wise, should, on account of his interest, be arranged on the complainant's side of the case, and that, as Wise and the other defendants are citizens of the same state, this would defeat the jurisdiction of the court. It is true that this court would arrange the parties according to their interest as it appears from the record, and, when such arrangement defeats the jurisdiction, the bill would be dismissed. But the case has not been fully developed by a taking of all the evidence. We cannot tell how it may appear when the case is ready for hearing on the plea to the jurisdiction, and on the merits, if it should be heard on the merits in the court below. On this appeal, a want of jurisdiction not appearing on the face of the pleadings, and the evidence on questions relating to it being in conflict, and not having been taken on direct and cross-examination, we do not think it proper to decide the question.

The decree rendered September 22, 1906, appointing a receiver and granting an injunction, is reversed and the cause remanded, with instructions to tax all the costs and expenses incident to the receivership against the complainant, who moved for the appointment.

NOTE.

Notice of Application for Appointment of Receivers.

I. Necessity.

1. In General.

[a] Parties to be affected by appointment of a receiver must have notice of the motion to appoint.

—(Ill. 1901) Consolidated Stanley Min. & Mill. Co. v. Loeber, 96 Ill. App. 128; (Ind. 1885) Pressley v. Harrison, 102 Ind. 14, 1 N. E. 188;

Digitized by Google

(Iowa, 1872) Bisson v. Curry, 35 Iowa, 72;
(Ky. 1883) Price v. Price, 5 Ky. Law Rep. 330;
(Md. 1858) Nusbaum v. Stein, 12 Md. 315;
(Miss. 1843) Mays v. Rose, Freem. Ch. 703; (1871) Whitehead v. Wooten, 43 Miss. 523; Vause v. Woods, 46 Miss. 120;
(N. J. 1862) Tibbals v. Sargeant, 14 N. J. Eq. (1 McCart.) 449;
(N. Y. 1869) People v. Albany & S. R. Co., 57 N. Y. 161, 1 Lans. 308;
(Wash. 1896) Larsen v. Winder, 14 Wash. 109, 44 Pac. 123, 53 Am. St. Rep. 864;
(W. Va. 1906) Baltimore Bargain House v. St. Clair, 52 S. E. 660;
(Wis. 1855) Hungerford v. Cushing, 8 Wis. 320.

[b] (Ala. 1882) It is no objection to the appointment of a receiver that all parties in interest did not have notice of the application.—Micou v. Moses, 72 Ala. 439.

[c] (D. C. 1899) A court of equity, having jurisdiction of the subject-matter of a suit, may appoint a receiver before the defendant has been served with process; but such power will only be exercised in a case of emergency.—Barley v. Gittings, 15 App. D. C. 427.

[d] (Ga. 1852) It is competent, on a proper case made, for the chancellor to appoint a receiver on the ex parte application of the complainant, before answer; the facts being verified by his affidavit.—Williams v. Jenkins, 11 Ga. 595.

[e] (Ill. 1905) The appointment of a receiver is a more serious matter than is the granting of an injunction, and it is error to appoint a receiver without notice where no showing of emergency is made.—Nathan C. Dow Co. v. Deist, 123 Ill. App. 364.

[f] (Ind. 1892) The nonresidence and delay that would have been necessary to give to the officers of one railroad company notice of an application for the appointment of a receiver of the company were no excuse for failure to give such notice to another defendant in the action.—Wabash Ry. Co. v. Dykeman, 133 Ind. 56, 32 N. E. 823.

[g] (La. 1891) After a receiver appointed by consent of a city to receive and distribute certain taxes for certain years has carried out the purpose of such special appointment, an order authorizing him to collect from the city taxes alleged to have been collected by the city for other years, virtually appoints a new receiver, and is illegally granted if no notice is first given to the city. —State ex rel. Brittin v. City of New Orleans, 43 La. Ann. 829, 9 South. 643.

[h] (La. 1898) A receiver cannot be appointed by an ex parte order in a pending suit against a corporation.—Mestier v. Chevallier Pavement Co., 24 South. 799.

[i] (Mich. 1881) In a suit by creditors to wind up an insolvent corporation, a receiver cannot be appointed upon an ex parte application, pending the decision on a demurrer putting in issue the right to file the bill.—Cook v. Detroit & M. R. Co., 45 Mich. 453, 8 N. W. 74.

[j] (Miss. 1876) To authorize the appointment of a receiver, 10 days' notice of the time and place of making the application must be given to the opposite party, unless it should be made to appear that an immediate appointment is necessary, in which case it may be made without notice.—Hardy v. McClellan, 53 Miss. 507.

[k] (N. Y. 1838) Where defendant in a creditors' bill has made no appearance within the time limited therefor, a receiver may be appointed on complainant's application without notice to defendant.—Austin v. Figueira, 7 Paige, 56.

[l] (Ohio, 1897) The appointment of a receiver without notice to the defendant may be made when good grounds are shown for such action, and it is not necessary that a specific finding of the particular facts justifying such action by the court should affirmatively appear in the order or upon the journal.—Dwelle v. Hinde, 18 Ohio Cir. Ct. R. 618, 8 O. C. D. 177.

[m] (Ohio, 1897) Allegations in a petition for the appointment of a receiver without notice to defendant, that if such notice be required defendant will remove his property from the reach of the creditors seeking relief, are sufficient, if found true by the court, to justify such appointment without notice.—Dwelle v. Hinde, 18 Ohio Cir. Ct. R. 618, 8 O. C. D. 177.

Digitized by Google

[n] (W. Va. 1886) In a suit in equity to enforce judgment liens on a debtor's land, a receiver of real estate and rents and profits cannot be appointed without reasonable notice of the application to the owner or tenant of the land.—Hutton v. Lockridge, 27 W. Va. 428.

[o] (W. Va. 1903) Unless the bill prays for the appointment of a receiver, there must be notice of application for such appointment in all cases of ex parte or vacation application, and in all cases pending the suit before the decree on the merits.—Batson v. Findley, 52 W. Va. 343, 43 S. E. 142.

2. Statutory Provisions.

[a] Colo. 1905) Code, § 164, providing that the application for the appointment of a receiver shall be made by filing a petition in the action in which a receiver is desired, and that the party opposing the appointment shall do so by filing an answer, etc., and that the court may hear evidence and decide the same like any other issue, contemplates that the adverse party should have notice of the petition and a right to file an answer thereto, and that evidence should be heard before a decision is made.—People v. District Court of City and County of Denver, 33 Colo. 293, 80 Pac. 908.

[b] Conn. 1874) The powers given to a receiver by the act of 1867 are so great that, if the act is to be construed as intending to authorize the appointment without notice, it should be held to be void as contrary to the principles of natural justice; and the judge should first make an express finding that it was just and reasonable that a receiver should be appointed.—Bostwick v. Isbell, 41 Conn. 305.

[c] (Ind. 1892) Under Rev. St. 1881, § 1230, providing that no receiver shall be appointed without notice to the adverse party, except on sufficient cause shown, the sufficient cause must be, first, for the appointment of a receiver at all, and, second, for not giving notice to the adverse party.—Wabash Ry. Co. v. Dykeman, 133 Ind. 56, 32 N. E. 823.

[d] (La. 1892) Rev. St. § 688, providing that a certain class of corporations shall forfeit their charter for insolvency, evidenced by a return of no property found on execution, "and in such case it shall be the duty of the district court, at the instance of any creditor, to decree such forfeiture, and to appoint a commissioner for effecting the liquidation, whose duty it shall be," etc., does not authorize such appointment by an ex parte order.—Ober v. Excelsior Planting & Manufacturing Co., 44 La. Ann. 570, 10 South. 792.

[e] (N. Y. 1835) A receiver for a corporation will not be appointed under the statute (2 Rev. St. p. 463) ex parte; but, on the filing of a petition, duly verified, showing the recovery of judgment against the corporation, the issuing of execution, and the return thereof unsatisfied, an order will be granted that the corporation show cause why the petition should not be granted, and, in the meantime, the officers of the company will be restrained from transferring or incumbering the property of the corporation.—Devoe v. Ithaca & O. R. Co., 5 Paige, 521.

[f] (N. Y. 1872) Code Civ. Proc. § 714, providing that a temporary receiver shall only be appointed without notice in a case where an order of publication for the purpose of acquiring jurisdiction over the defendant has been published, does not prevent the appointment of a receiver for an insolvent corporation without notice, where the court has acquired jurisdiction of the corporation by service on it, and its appearance by attorney.—Ettlinger v. Persian Rug & Carpet Co., 66 Hun, 94, 20 N. Y. Supp. 772.

3. Nature of Emergency or Necessity in General Which will Obviate Necessity of Notice.

[a] It is only in cases of exceptional occurrence and emergency that the appointment of a receiver without notice is proper.

—(U. S. 1907) Huff v. Bidwell, 81 C. C. A. 43, 151 Fed. 563;
(Fla. 1875) State v. Jacksonville, P. & M. R. Co., 15 Fla. 201;
(Ill. 1904) Anderson v. Hultberg, 117 Ill. App. 231;
(Ind. 1907) Continental Clay & Mining Co. v. Bryson, 81 N. E. 210; Henderson v. Reynolds, 81 N. E. 494, 11 L. R. A. (N. S.) 960;
(Md. 1857) Triebert v. Burgess, 11 Md. 452; (1862) Haight v. Burr, 19 Md. 130;
(Mo. 1903) Tuttle v. Blow, 176 Mo. 158, 75 S. W. 617, 98 Am. St. Rep. 488;

Digitized by Google

(Tex. 1897) Webb v. Allen (Civ. App.) 40 S. W. 342;
(Va. 1891) Fredenheim v. Rohr, 87 Va. 764, 13 S. E. 193, 266;
(W. Va. 1890) Ruffner v. Mairs, 33 W. Va. 655, 11 S. E. 5.

[b] A receiver of the defendant's property cannot be appointed ex parte, before the defendant has had an opportunity to be heard, except where he is out of the jurisdiction of the court, or cannot be found, or the immediate interference of the court is necessary to prevent the destruction or loss of property.

—(Ill. 1896) Craver & Steele Mfg. Co. v. Whitman & Barnes Mfg. Co., 62 Ill. App. 313;
(Mo. 1902) Rees v. Andrews, 169 Mo. 177, 69 S. W. 4;
(N. Y. 1831) Verplanck v. Mercantile Ins. Co., 2 Paige, 438; (1840) Sandford v. Sinclair, 8 Paige, 373; Gibson v. Martin, Id. 481; (1869) People v. Albany & S. R. Co., 7 Abb. Prac. (N. S.) 265;
(Tex. 1906) Cotton v. Rand (Civ. App.) 92 S. W. 266.

[c] To justify the appointment of a receiver without notice to necessary and interested parties, it must appear that irreparable injury will result from the delay.

—(Ala. 1875) Crowder v. Moone, 52 Ala. 220;
(Ga. 1857) Johns v. Johns, 23 Ga. 31;
(Ky. 1886) Wilson v. Jonas, 8 Ky. Law Rep. 510;
(Nev. 1866) Maynard v. Railey, 2 Nev. 313;
(Ohio, 1882) Cleveland, C., C. & I. Ry. Co. v. Jewett, 37 Ohio St. 649.

[d] (U. S.) Notice should be given, and the defendant afforded an opportunity to be heard, before the appointment of a receiver, except in cases of imperious necessity, requiring immediate action by the court, and where protection can be afforded the plaintiff in no other way, and it is error for the court to act without notice except in such cases.—(1902) Cabaniss v. Reco Min. Co., 54 C. C. A. 190, 116 Fed. 318; (1903) Joseph Dry Goods Co. v. Hecht, 57 C. C. A. 64, 120 Fed. 760.

[e] (U. S. 1901) The appointment of a receiver after notice before final trial is a jurisdiction which should be exercised with great care and with studious effort to avoid mistake and oppression; and to appoint a receiver without notice is a jurisdiction and power that should be rarely used, and never except in a clear case of imperious necessity, when the right of the complainant, on the showing made by him, is undoubted, and when such relief and protection can be given in no other way. When such notice can be given, it should be given, unless there is imminent danger of loss, or great damage, or irreparable injury, or the greatest emergency, or when by the giving of notice the very purpose of the appointment of a receiver would be rendered nugatory; and such instances are of rare occurrence in the federal courts, because of their power, when an injunction is asked for, to grant a temporary restraining order (Rev. St. U. S. § 718 [U. S. Comp. St. 1901, p. 580]), which may be served at the same time that the notice is served, to prevent action by the defendant or his agent, and to preserve the existing conditions until the application for an injunction and for a receiver can be heard.—North American Land & Timber Co. v. Watkins, 48 C. C. A. 254, 109 Fed. 101.

[f] (Ala. 1898) A receiver cannot be appointed on the single verified fact of the debtor's insolvency, without notice to the latter of the application.—Smith-Dimmick Lumber Co. v. Teague, 24 South. 4.

[g] (Ala. 1905) Under Code 1896, § 799, providing that, where a receiver is appointed in vacation, reasonable notice of the application must be given, or good reason shown for failure to give the same, that the directors of a corporation for which a receiver was asked might, pending the appointment of the receiver, adjust a certain claim and issue negotiable paper of the company, was not ground for the appointment of the receiver without notice to parties adversely interested, where the court, on the day on which the receiver was appointed, issued an injunction restraining all the parties from taking any action towards the settlement of the claim in question.—Walker County Coal & Mineral Land Co. v. Long, 39 South. 770.

[h] (Ala. 1906) Code 1896, § 799, provides that, when application is made in vacation for a receiver, reasonable notice of the time of the application and the

Digitized by Google

person to whom it will be submitted must be given, or a good reason shown to the chancellor or register for failure to give the same. Acts 1903, p. 337, § 49, provides for the dissolution of a corporation on petition of two-thirds of the stockholders, but requires personal notice to all resident stockholders and publication as to nonresidents; and section 50 (page 338) authorizes creditors and stockholders to apply to the court for the appointment of a receiver, and authorizes the court, after being satisfied from the affidavits and after notice to the corporation, "to proceed to hear the proof which may be offered by the parties." *Held*, that a receiver should not be appointed on an ex parte proceeding, except in cases of great emergency otherwise allowed by law.—Ensley Development Co. v. Powell, 40 South. 137.

[i] (Ind. 1892) The verified complaint, in an action by a stockholder of a railroad company against such company and another company having a 99-year lease of the former's road, alleged that such lease was void; that the lessee has wrecked the leased property, and has carried off to its main line, and converted to its own use, all the engines, cars, machinery, and rolling stock of the lessor; that the directors and certain stockholders of the latter are assisting the lessee to destroy the lessor's franchise; that the former designs moving the shops from the latter's road, and locating them on lessee's main line; that the lessee is insolvent; that the large stockholders of the lessor, in league with the lessee, elect directors of the former from among their own number, who are invariably nonresidents; that the secretary and treasurer resides in an Eastern city, and has in his possession the lessor's records and papers, and the only copy of the inventory of its rolling stock is in possession of the lessee; "that there is an emergency for the immediate appointment of a receiver for said" lessor, "its property and franchises, before summons and notice can be given," because of the nonresidence of its officers and directors; that in the time required for service irreparable damage will be done lessor, its property and franchises, and plaintiff's cause of action will be defeated, as he believes, because the lessee "will resort to desperate measures to retain possession of said road," and will, if necessary, proceed to another jurisdiction, and procure the appointment of a receiver friendly to its interests for said lessor, or both of said roads, and institute other actions to harass plaintiff; that it will make way with said inventory, tear up and convert to its own use the remaining tracks, move the repair and machine shops, and scatter and run off the rolling stock beyond the jurisdiction of the court, so that it cannot be found; that some accident is liable to occur whereby great injury may be done to life and property, subjecting the lessor to heavy damages. *Held*, that the appointment of a receiver, without notice to the lessee, when the same could be served in the county where the proceedings were had, was erroneous.—Wabash R. Co. v. Dykeman, 133 Ind. 56, 32 N. E. 823.

[j] (Ind. 1895) It is improper to appoint a receiver of a corporation situated, and having its offices and business, in the town where the action is brought, without notice, on a verified bill which states no facts showing that irreparable or any other damages would result to the corporation by giving notice of the application, but merely shows that plaintiff apprehends that, if notice be given, defendants, who control the corporation, will do things which plaintiff wishes to prevent being done, and which he alleges will be to his detriment as a stockholder, and to the detriment of the corporation.—Sullivan Electric Light & Power Co. v. Blue, 142 Ind. 407, 41 N. E. 805.

[k] (Ind. 1907) A complaint averring that a corporation was insolvent, that its president was a nonresident of the state, and that, if he were permitted to turn the assets into cash or available securities, he would, in all probability, take the same outside the jurisdiction of the court, and that plaintiff believes that he would not dispose of the assets to the best advantage of the minority stockholders, and that the corporation was threatening to sell the property of the corporation over the protest and objection of the plaintiff, was not sufficient to authorize the appointment of a receiver without notice, since there were no facts alleged showing that irreparable injury or any loss of property would have resulted if notice had been given.—Continental Clay & Mining Co. v. Bryson, 81 N. E. 210.

Digitized by Google

[l] (Mo. 1896) The insolvency of a corporation and the default in the payment of interest on its mortgage bonds do not, of themselves, authorize the appointment of a receiver for it without notice.—Merriam v. St. Louis, C. G. & Ft. S. Ry. Co., 136 Mo. 145, 36 S. W. 630.

[m] (N. D. 1891) In an action to quiet title to land, and to enjoin defendant, who resided on it, from tilling it, both during the pendency of the action and permanently, the complaint was verified only on information and belief by one of plaintiffs' attorneys. A verified answer was served, denying the facts and equities set out in the complaint. After the service of the answer, and before a trial was had, plaintiffs, without notice to defendant or his counsel, applied to the district court for an order appointing a receiver of the crops planted by the defendant and growing on the land. The application was based on an affidavit setting out, among other things, defendant's insolvency, and that the crops were "liable to be mortgaged," but no attempt was made to support the original equities set out in the complaint. *Held*, that an ex parte order appointing the receiver was error, since the appointment of receivers ex parte is not tolerated by the courts except in cases of the gravest emergency, and to prevent irreparable injury.—Grandin v. La Bar, 2 N. D. 206, 50 N. W. 151.

4. Injury Incurred by Delay or by Notice of Application.

[a] (U. S. 1895) Where an insolvent corporation had assets scattered all over the country, with liabilities approaching maturity on which attachments and local receiverships were threatened, whereby there was danger that the assets would be wasted and the interests of stockholders and creditors endangered, an application for a receiver by the stockholders was properly made without notice.—Olmstead v. Distilling & Cattle Feeding Co. (C. C.) 67 Fed. 24.

[b] (Ala. 1884) A receiver may be appointed in a pending suit without notice to defendants, when it is shown by affidavits that they are disposing of the property in which plaintiff claims an interest, appropriating the proceeds, and are insolvent, whereby the object of the suit would probably be defeated by delay.—Sims v. Adams, 78 Ala. 395.

[c] (Cal. 1907) An order appointing a receiver without a trial should not be made without previous notice to the defendant, where it does not appear that irreparable injury would be done during the few days necessary for a hearing on notice.—Hobson v. Pacific State Mercantile Co. (App.) 89 Pac. 866.

[d] (Del. 1859) Where the bill in a suit against an executor charged maladministration, and the threatened commission of acts which would cause irremediable injury, a receiver may be appointed, on motion, without notice to the executor.—Davis v. Browne, 2 Del. Ch. 188.

[e] (Fla. 1875) Where no serious injury to the property involved in the controversy can result from the delay, notice should always be given before a receiver is appointed.—State v. Jacksonville, P. & M. R. Co., 15 Fla. 201.

[f] (Ky. 1886) Ex parte evidence that defendants had refused to obey an order of injunction restraining him from interfering with plaintiff's possession of certain property did not authorize the appointment of a receiver without notice to the defendant; the property not being endangered, but the plaintiff merely prevented from conducting the business.—Wilson v. Jonas, 8 Ky. Law Rep. 510.

[g] (Md. 1866) A receiver will not be appointed to take charge of the property of a judgment debtor, on an ex parte application on the ground of fraud or imminent danger of loss to the judgment creditor, unless such fraud or danger is clearly proved.—Voshell v. Hynson, 26 Md. 83.

[h] (Pa. 1840) As a general rule, a receiver will not be appointed without notice to those interested; but, where irreparable injury would arise from delay, a receiver will be appointed without notice, leaving the other party the right to apply to have the order superseded on cause shown.—Gowan v. Jeffries, 2 Ashm. 296.

[i] (Tex. 1905) In order to justify the appointment of a receiver without notice to the adverse party, the facts showing such a pressing emergency and the existence of such circumstances as to render an immediate appointment without notice necessary for the protection of the rights of the applicant should be disclosed.—Haywood v. Scarborough (Civ. App.) 92 S. W. 815.

Digitized by Google

[j] (W. Va. 1873) In interpleader, ordinarily, a special receiver should not be appointed to take possession of the property without notice. Still there are exceptions to the rule, as where immediate action is necessary to prevent great loss or injury, and especially where it is not sought to dispossess a party of his own property.—Oil Run Petroleum Co. v. Gale, 6 W. Va. 525.

[k] (W. Va. 1906) A receiver of personalty may be appointed in vacation, without notice of the application, before service of process, where to require notice would be unreasonable or would be likely to defeat the purpose for which a receivership is necessary, and in cases of great emergency.—Baltimore Bargain House v. St. Clair, 52 S. E. 660.

5. —— *Allegations of Danger of Injury.*

[a] (Ala. 1893) When the complaint merely alleges that the appointment of a receiver is necessary "to prevent irreparable injury and total destruction of the insolvent's assets," without alleging the facts constituting the necessity for an immediate appointment, an order appointing a receiver without notice is erroneous.—Bank of Florence v. United States Savings & Loan Co., 104 Ala. 297, 16 South. 110.

[b] (Ala. 1899) A bill by a judgment creditor of a husband to set aside as fraudulent a transfer to the wife of mineral lands, machinery, and personal property, and the transfer thereof by her to a corporation did not allege the insolvency of either grantee, nor show that the realty was not sufficient to satisfy the judgment. It alleged that the company was constantly operating the mines, and appropriating the proceeds, and that, if notice of the appointment of a receiver were given, the husband, who controlled the company, would dispose of or manipulate the personalty and the profits from the realty so as to defeat the creditor's rights. The husband and wife resided in the place where the corporation did business and where the bill was filed. *Held*, that the appointment of a receiver without notice was unauthorized.—Gilreath v. Union Bank & Trust Co., 25 South. 581.

[c] (Ala. 1901) In a bill filed seeking the enforcement of a trust, and asking for the appointment of a receiver of the trust property, where facts are averred showing that the respondent is insolvent, and that there is imminent danger of his disposing of the trust property before a receiver could be appointed if he had notice of an application for a receiver, and the bill is properly verified, such averments authorize the appointment of a receiver without notice.—Culver v. Guyer, 29 South. 779.

[d] (Fla. 1898) It is error to appoint a receiver without notice to the parties concerned, unless upon affidavits containing positive allegations of fact showing that the injury apprehended will be done if an immediate remedy is not afforded.—Jacksonville Ferry Co. v. Stockton, 23 South. 557.

[e] (Ill. 1893) Defendant, the purchaser of goods, placed the seller in charge to sell them off. A creditor of the seller applied for the appointment of a receiver for the goods, but the only fact stated in the petition which tended to support the pleader's conclusion of law that complainant's interests would be endangered by the delay necessary to give notice of the application was that the seller was insolvent. *Held*, that an ex parte appointment of a receiver was error, since an injunction against further sales pending a hearing of a motion for a receiver on notice would have been sufficient protection.—Nusbaum v. Locke, 53 Ill. App. 242.

[f] (Ill. 1900) Courts are not at liberty to disregard the rule of practice requiring notice to be given of the application for the appointment of a receiver, unless it appears that the delay resulting from the giving of the notice will defeat plaintiff's rights or result in great injury to him; and, when the application is ex parte on the ground of extreme necessity, the particular facts and circumstances rendering such summary proceedings necessary must be set forth.—English v. People, 90 Ill. App. 54.

[g] (Ind. 1892) Where a complaint does not show fraud, or that the property or any part of it is about to be wasted, misappropriated, or removed beyond the jurisdiction of the court, and it is apparent that plaintiffs will suffer no great loss during the time necessary to give notice to a railroad company operating a line through the county in which the suit is brought, a receiver should not be appointed ex parte.—Chicago & S. E. Ry. Co. v. Cason, 133 Ind. 49, 32 N. E. 827.

Digitized by Google

[h] (Ind. 1892) Rev. St. 1881, § 1230, provides that receivers shall not be appointed in any case until the adverse party shall have appeared, or shall have reasonable notice of the application for such appointment, "except upon sufficient cause shown by affidavit." *Held*, that where a verified complaint stated that there was an emergency for the ex parte appointment of a receiver, but failed to state the facts on which the opinion of plaintiff was founded, such appointment was not justified.—Wabash R. Co. v. Dykeman, 133 Ind. 56, 32 N. E. 823.

[i] (Mo. 1904) Where plaintiff seeks to have the property of a corporation, against which he has no claim, placed in the hands of a receiver pending an action to settle a difference between plaintiff and a third person, a contention that the case is one where, without even an allegation that the corporation is insolvent, the appointment of a receiver should be made in vacation, and in the absence of notice to the defendants is untenable.—State ex rel. American Lead & Baryta Co. v. Dearing, 184 Mo. 647, 84 S. W. 21.

[j] (N. Y. 1831) When a summary proceeding is necessary, the facts and circumstances which render it proper should be set forth in the bill or petition. The affidavit of a party that he is satisfied of the necessity of such a proceeding is not sufficient.—Verplanck v. Mercantile Ins. Co., 2 Paige, 438.

6. *In Cases Where the Appointment is Prayed for as a Measure of Final Relief.*

[a] (Ind. 1881) Where the appointment of a receiver is prayed for as a measure of final relief, the process that brings the defendant into court to answer the complaint is sufficient notice to him of the final relief sought. The statute intends that special notice shall be given only when a receiver is asked for pending the action.—Newell v. Schnull, 73 Ind. 241.

[b] (Ind. 1896) Rev. St. 1894, § 1244 (Rev. St. 1881, § 1230), provides that receivers shall not be appointed until the adverse party shall have appeared, or shall have had reasonable notice of the application for such appointment, except upon sufficient cause shown by affidavit. *Held*, in an action solely for the appointment of a receiver, where defendant had appeared, that it was error to appoint such receiver at chambers, and not in open court, though during term time, on an allegation of emergency, without notice to defendant, stating time and place of the application, and without an affidavit showing sufficient cause for appointing him without notice.—Winchester Electric Light Co. v. Gordon, 143 Ind. 681, 42 N. E. 914.

7. *In Cases Where Defendant is out of Reach of Notice.*

[a] (Iowa, 1882) Under Code, § 2903, which provides for the appointment of a receiver in certain cases, "on such notice to the adverse party as the court or judge may prescribe," where the adverse party is not within the jurisdiction of the court, and cannot be served, or cannot be readily served, with notice, the court may appoint a receiver without notice.—Maish v. Bird, 59 Iowa, 307, 13 N. W. 298.

[b] (N. Y. 1828) A receiver may be appointed without notice to the defendant, where there is danger of serious loss from delay, if the defendant is out of the state, and has no residence or place of business where the subpœna can be served, saving to the defendant the right to apply for relief against the order, on showing sufficient cause.—Van Rensselaer v. Morris, 1 Paige, 1.

[c] (N. Y. 1828) Where defendant has absconded to prevent service of a subpœna to appear and answer the bill, or has left the state and has no residence or place of business where subpœna can be served, a receiver may be appointed without notice.—People v. Norton, 1 Paige, 16.

[d] (N. Y. 1860) An order of the court of chancery, appointing a receiver of a bank in proceedings adjudging it insolvent, was not void merely because no officer of the bank had notice of the application; it appearing that no such officer could be found within the state.—Dayton v. Borst, 20 N. Y. Super. Ct. (7 Bosw.) 115, affirmed (1865) 31 N. Y. 435.

8. *In Cases Where Defendant has had Notice of a Previous Hearing of the Application.*

[a] (Ind. 1895) Where the judge was absent on the day set for the hearing of a petition for the appointment of a receiver, he has jurisdiction to hear it on the following day, without further notice to defendants.—Stephens v. Kaga, 142 Ind. 523, 41 N. E. 930.

Digitized by Google

9. In Cases Where Application is Made in Term Time in Pending Suit.

[a] (W. Va. 1889) Where the motion for the appointment of a receiver is made in term time in a pending suit, no notice to the debtor is necessary.—Ogden v. Chalfant, 32 W. Va. 559, 9 S. E. 879.

II. REQUISITES AND SUFFICIENCY AND SERVICE.

1. In General.

[a] (Ala. 1900) Under Code, § 799, requiring reasonable notice to be given of an application for the appointment of a receiver in vacation, the service of such notice after the hour specified therein for the hearing is of no effect, though it states that the application will be heard at a certain hour, "or as soon thereafter as the chancellor may fix."—Schilcer v. Brock, 124 Ala. 626, 27 South. 473.

[b] (Ala. 1906) On a question as to whether a corporation had had proper notice of an application for the appointment of a receiver, there was in evidence a letter from the vice president to an attorney, stating that the appointment of a certain person as a receiver would be satisfactory, but it did no appear whether the letter was written before or after the order for the appointment of a receiver, and the letter was not signed in the vice president's official capacity. *Held*, that there was not sufficient notice.—Ensley Development Co. v. Powell, 40 South. 137.

[c] (Neb. 1903) Where an application for the appointment of a receiver is made in a pending suit, notice may be served on the attorney of record representing the party against whom the application is made, and such attorney may waive the time required by statute.—Murphy v. Fidelity Mut. Fire Ins. Co., 95 N. W. 1022.

[d] (N. Y. 1857) To support an appointment of a receiver, where the debtor has not appeared, the order to appear must have been personally served; for the Code does not provide for any substituted service.—Barker v. Johnson, 4 Abb. Prac. 435.

[e] (R. I. 1893) Under Pub. St. c. 237, § 13, which provides for a petition in equity for the appointment of a receiver, and "notice to the debtor," the notice required is personal notice; and the service of a citation by leaving a copy at the last and usual abode of the debtor, who has absconded, is not sufficient.—Beck v. Ashkettle, 18 R. I. 374, 27 Atl. 505.

[f] (R. I. 1894) The court, if the service of process on petition for receiver is unnecessarily delayed, will, upon proper procedure, order the petition dismissed in default of service within a specified time.—Whipple v. Babcock, 18 R. I. 611, 30 Atl. 464.

[g] (S. C. 1898) Under Act 1897 (22 St. at Large, p. 510), requiring notice of an application for a receiver to be given to the party whose property is sought to be affected, without prescribing how such notice shall be given, and Code Civ. Proc. § 409, subd. 2, providing that service of notice may be made on a party by leaving the paper at his residence, with some person of suitable age and discretion, service of such notice by leaving copies of the papers with the wife of such party, at his place of residence, in his absence, was sufficient, where he was not absent from the state.—Allen v. Cooley, 31 S. E. 634.

[h] (Wash. 1903) Where defendant appeared by attorney, and demurred to the complaint, an amended complaint and four days' notice of a motion for the appointment of a receiver were properly served on such attorney in compliance with 2 Ballinger's Ann. Codes & St. § 4886, providing that one who has appeared in an action is entitled to notice of all subsequent proceedings, and section 4886a, that such party is entitled to at least three days' notice of motions, which may be served on the party or his attorney.—Haggard v. Sanglin, 71 Pac. 711.

2. Defects, Objections, and Waiver.

[a] (U. S. 1844) Previous notice of a motion for the appointment of a receiver is not necessary, when counsel for the opposite party are present in court.—McLean v. La Fayette Bank, Fed. Cas. No. 8,887 [3 McLean, 503].

[b] (Ala. 1900) Where notice of an application for the appointment of a receiver in vacation is served after the hour specified therein for the hearing, the defect cannot be cured by adjourning the hearing. The chancellor should fix a new date for the hearing, and order an alias notice to issue.—Schilcer v. Brock, 124 Ala. 626, 27 South. 473.

Digitized by Google

[c] (Ill. 1900) The objection that a receiver has been appointed without notice is not tenable where the defendant, upon his motion to discharge the receiver before an appeal, has had a hearing which served all the purposes of a notice in the first instance.—Hancock v. American Bonding & Trust Co., 86 Ill. App. 630.

[d] (Kan. 1889) That a receiver was appointed without notice to the adverse party is immaterial where the question of the propriety of such appointment has been heard before the judge of the district court, and both parties have had ample opportunity of being heard.—Elwood v. First Nat. Bank, 41 Kan. 475, 21 Pac. 673.

[e] (Neb. 1899) The statutory requirement that notice of an application for the appointment of a receiver be given at least five days before the proposed hearing is waived where the adverse party appears and resists the application on other grounds.—Farmers' & Merchants' Bank v. German Nat. Bank, 59 Neb. 229, 80 N. W. 820.

[f] (Neb. 1900) A court has power to appoint a receiver without notice, where the parties to the suit waive the statutory notice and consent to the appointment.—Vieth v. Ress, 60 Neb. 52, 82 N. W. 116.

[g] (Neb. 1903) On an application for the appointment of a receiver, the five days' notice required by statute may be waived by the parties entitled thereto.—Murphy v. Fidelity Mut. Fire Ins. Co., 95 N. W. 1022.

[h] (S. C. 1898) Where the notice of an application for a receiver was served on the adverse party by leaving copies of the papers with his wife, at his place of residence, and he appeared by counsel at the hearing, submitted a verified answer, and otherwise resisted the motion, personal service of such notice was waived.—Allen v. Cooley, 31 S. E. 634.

[i] (Tex. 1906) Within two days after the appointment of a receiver without notice, on the application of plaintiff, defendants appeared and filed a motion to set aside the appointment. There was a full hearing of evidence and argument on disputed points and the court adhered to its action and in effect reappointed the receiver. *Held*, that the appointment was valid, though the appointment in the first instance was illegal because made without notice.—Cotton v. Rand (Civ. App.) 92 S. W. 266.

[j] (Tex. 1907) In proceedings for the appointment of a receiver, the notice mentioned, unless otherwise specified, applies only to defendant, and an appearance by defendant without objection to the appointment is conclusive as to creditors, unless there is collusion or fraud in the appearance.—Ripy v. Redwater Lumber Co. (Civ. App.) 106 S. W. 474.

[k] (Tex. 1907) Joint receivers for a corporation were appointed without notice, and thereafter its directors entered an appearance, after which the court made a second order appointing one of the joint receivers sole receiver. *Held*, that such appearance before the second order cured any error in the appointment without notice.—Ripy v. Redwater Lumber Co. (Civ. App.) 106 S. W. 474.

III. Effect of Failure to Give Notice.

[a] (Idaho, 1899) An ex parte order appointing a receiver in an action, where made after the appearance of a defendant, is void.—Cummings v. Steele, 59 Pac. 15.

[b] (Ind. 1881) Under Act March 12, 1875, an order appointing a receiver to take possession of property upon an allegation that it belonged to a certain person is void, if no notice of the application for a receiver is given to such person.—May v. Greenhill, 80 Ind. 124.

[c] (Ky. 1886) Though an order appointing a receiver without notice to the defendant may be erroneous, it is not void.—Wilson v. Jonas, 8 Ky. Law Rep. 510.

[d] (La. 1872) The appointment of a receiver for a corporation on an ex parte application, without even alleging its insolvency, is absolutely null, and carries with it no right to receive the assets or revenues of the company.—Turgeau v. Brady, 24 La. Ann. 348.

[e] (Md. 1858) Where a receiver was appointed on the day on which the bill was filed, and without previous notice of the application having been given to the defendants, the order of appointment will be reversed.—Nusbaum v. Stein, 12 Md. 315.

Digitized by Google

[f] (Mich. 1872) An order appointing a receiver, made without notice on the day the bill was filed, in which it was not set up by complainants that they had any lien, and made without giving defendants an opportunity to be heard, either as to the propriety of having any receiver or as to the fitness of the one appointed, was not within the judicial power, and could not lawfully be enforced.—Salling v. Johnson, 25 Mich. 489.

[g] (Mich. 1875) The ex parte appointment of a receiver to manage the corporate business, and the ex parte granting of an interlocutory injunction to deprive the directors of control, are more than irregular, and are absolutely void, as beyond the power of the court.—People v. Judge of St. Clair Circuit, 31 Mich. 456.

[h] (Miss. 1894) An order appointing a receiver, made on Sunday, without notice, and before complainant has filed his bill, is invalid.—Barber v. Manier, 71 Miss. 725, 15 South. 890.

[i] (Mont. 1897) Under Code Civ. Proc. 1895, § 951, providing that notice of an application for the appointment of a receiver in an action, before judgment therein, must be given to the adverse party, unless he has failed to appear and the time limited for his appearance has expired, or unless there is immediate danger that the property or fund will be removed beyond the jurisdiction of the court, or lost or materially injured, the appointment of a receiver, at chambers, on the application of minority stockholders of a mercantile corporation, to take charge of all of the property of such corporation and practically wind up its business, immediately on the filing of a complaint which stated no ground therefor, without notice, and before service had been made on such corporation in such action, was without any authority of law.—State v. Second Judicial District Court of Silver Bow County, 20 Mont. 284, 50 P. 852.

[j] (Tenn. 1903) Where, on an application for the appointment of a receiver of land in litigation, defendant appeared and filed counter affidavits contesting the application, an order appointing a receiver was not erroneous for want of notice to defendant.—Troughber v. Akin, 109 Tenn. 451, 73 S. W. 118.

[k] (Tex. 1906) On an application for the appointment of a receiver of property it was shown that an order for the sale thereof for delinquent taxes had been issued, and that the trustee in whose custody the property had been placed was a nonresident. *Held*, that the court did not abuse its discretion in appointing a receiver without notice, irrespective of the fact of a subsequent stay in the proceedings to sell the property.—Cotton v. Rand (Civ. App.) 92 S. W. 266.

IV. Secrecy of Proceedings.

[a] (U. S. 1895) There is nothing improper in keeping secret the application for and appointment of receivers of a corporation, until the papers in such proceedings have been filed in the proper office.—Olmstead v. Distilling & Cattle Feeding Co. (C. C.) 67 Fed. 24.

(160 Fed. 659.)

THE RESOLUTE.

(Circuit Court of Appeals, Second Circuit. March 10, 1908.)

No. 190.

Towage—Stranding of Tow—Liability of Tug.

A finding affirmed that a tug was liable for damages resulting from the stranding of a barge which she was towing from anchorage in New Haven Harbor, and that the evidence did not sustain the defense that the barge struck an unknown obstruction on the anchorage grounds, but rather indicated that through an error of the master the tug and tow were outside the dredged basin used as the anchorage grounds.

[Ed. Note.—For cases in point, see Cent. Dig. vol. 45, Towage, §§ 11–20.]

Appeal from the District Court of the United States for the Southern District of New York.

Digitized by Google

This cause comes here upon appeal from a decree holding the tug liable for damages resulting from the stranding of a barge which she was towing from anchorage out of New Haven harbor.

For opinion below, see 149 Fed. 1005.

Robinson, Biddle & Benedict (W. S. Montgomery and Roderick Terry, Jr., of counsel), for appellant.

James K. Macklin and La Roy S. Gove, for appellee.

Before LACOMBE, COXE, and NOYES, Circuit Judges.

LACOMBE, Circuit Judge. Upon the whole case, despite some strong testimony adduced by the claimant, we are inclined to affirm the District Judge. No report was made at the time of the alleged "unknown obstruction on the anchorage ground," and no effort was made to take ranges and determine the exact location, although the barge was stranded for a considerable time. These circumstances cast some measure of doubt on the testimony of those who two years subsequently undertake, from their unaided memory, to locate the stranding on the anchorage ground. The testimony as to location is conflicting, but we are inclined to take the one first marked by the witness Collier—near the south corner of the anchorage ground. If it be so taken, there is a suggestion in the evidence of the master of the tug which may sufficiently account for the stranding. The tow was anchored in the northerly part of the anchorage grounds. The tug, after she got under way, proceeded down towards the southerly end of anchorage intending to proceed thence in the main channel. The stranding occurred before she had reached this southerly end. The chart shows that the anchorage basin is not a parallelogram; it runs alongside the channel for a considerable distance with a uniform width of nearly an eighth of a mile, but to the south its inshore boundary runs at an angle, so that for a considerable distance the dredged basin grows gradually narrower till it reaches its southern end on the edge of the channel. In consequence, a vessel which is proceeding 50 or 60 feet west of the channel will find itself inshore of the boundary of the basin before it has reached the southern end. Now the master of the tug apparently did not so understand the situation. He testified that the anchorage ground was about 300 or 400 feet wide, and that so far as he knew it did not narrow, but "is supposed to be dug all the same width." He might very easily, therefore, have supposed he was on anchorage ground because he had not yet reached the buoy which marked its southerly terminus, when in fact by reason of the gradual reduction of the width both tug and tow were actually inshore of the dredged basin.

The decree is affirmed, with interest and costs.

Digitized by Google

(160 Fed. 653.)

BIDWELL v. PRESTON.

(Circuit Court of Appeals, Second Circuit. March 10, 1908.)

No. 144.

1. CUSTOMS DUTIES—REFUND—ACCEPTANCE OF PRINCIPAL—WAIVER OF INTEREST—PAYMENT ON ACCOUNT.

On the refund of duties that had been improperly exacted, interest was withheld on the ground that there was no appropriation for payment of interest; so that the sum repaid was the exact equivalent of the principal. *Held*, that the acceptance of this sum by the importer was tantamount to a waiver of the claim of interest, and could not be considered as a general payment on account, which the payee was entitled to apply, first, to the extinguishment of the interest and, next, to part payment of the principal.

2. SAME—PAYMENT BY STRANGER.

Where the government repaid duties which had been improperly exacted by its agent, a collector of customs, this did not constitute a payment by a stranger which could not inure to the benefit of the collector.

In Error to the Circuit Court of the United States for the Southern District of New York.

This case arose out of an action brought by Gustavo Preston against Geo. R. Bidwell, formerly collector of customs at the port of New York. The opinion rendered in the court below is as follows:

HOLT, District Judge. Judge Platt having decided in a precisely similar case that the plaintiff was entitled to recover interest on the duties exacted, and the judgment on his decision having been paid by the government, orderly practice, in my opinion, requires that I follow that decision. It moreover seems to me on the merits an inherently just decision. If the government exacts money from an importer without legal authority, it ought to repay it with interest; and if an importer has a just right to interest when the principal is paid, I cannot see why that right is destroyed because the government only pays the principal. But I rest my conclusion on the fact of the former judgment and its payment, without having given a careful examination to the question whether the cases cited for the government are applicable to this case.

The motions to set aside the verdict in each case are denied.

J. Osgood Nichols, Asst. U. S. Atty.

John David Lannon, for importer.

Before LACOMBE, COXE, and NOYES, Circuit Judges.

LACOMBE, Circuit Judge. The facts in this case are very simple. On August 4, 1899, the plaintiff paid the defendant, who was the collector at the port of New York, under protest, the sum of $4,843.32, to obtain possession of various goods brought from Porto Rico to New York. This exaction for customs duties was illegal; and in consequence of the subsequent judicial determination of that question, the government of the United States delivered to the plaintiff a draft for $4,843.32 on September 10, 1901. On that date the defendant in error claimed that the sum of $5,453.57 was due. This sum included interest on the amount paid from August 4, 1899, to September 10, 1901. This claim was not disputed, but the government authorities took the position that there was "no appropriation available for payment of in-

Digitized by Google

terest in cases wherein a judgment has not been rendered." Thereafter plaintiff brought this suit to recover the sum of $610.25 as a balance still due.

Defendant relies upon the well-settled doctrine that, where interest is payable as damages, the reception of the principal without the interest after default is a conclusive waiver of the claim for interest. Thomas v. Railway (C. C.) 81 Fed. 911; Stewart v. Barnes, 153 U. S. 456, 14 Sup. Ct. 849, 38 L. Ed. 781. The plaintiff contends that this doctrine does not apply, because at the time of payment there was due to him a lump sum of $5,453.57, and that the sum paid ($4,843.32), although the exact amount of the claim without interest, was a general payment on account which he was entitled to apply, first, to the extinguishment of the interest and, next, to part payment of the principal. The difficulty with this contention is that it is not warranted by the facts. It appears that at the time of payment plaintiff delivered to defendant a letter containing the following statement:

"In addition to the amount set forth in my claim for duties erroneously exacted on my importation of sugar by the Julia Frances from Port Rico, amounting to $4,843.32, I claim the interest due on the amount set forth in my claim at the same rate per annum which I reserve and do not abandon."

We are satisfied that this constituted an appropriation of the payment specifically to the claim, and find no persuasiveness in the argument that the repayment by the government of moneys improperly collected for it by its officer was a payment by a stranger which could not inure to the benefit of the debtor.

The judgment is reversed.

(160 Fed. 654.)

SLOAN v. MERCHANTS' SAVINGS & TRUST CO. OF PITTSBURG.

(Circuit Court of Appeals, Third Circuit. April 2, 1908.)

No. 64.

1. REPLEVIN—NATURE OF ACTION—POSSESSION.

Though the question of title to personal property may be litigated in replevin, if properly brought, the action independent of statute is a possessory one brought by complainant to recover possession of personal property.

[Ed. Note.—For cases in point, see Cent. Dig. vol. 42, Replevin, § 1.]

2. SAME—STATUTES—BOND.

Acts Pa. 1901 (P. L. 88, No. 61, § 1), declaring that plaintiff in replevin shall give bond, with condition that if he fails to maintain title to goods or chattels he will pay to the party entitled their value and legal costs, etc., does not authorize the giving of such bond in any case in which plaintiff is in possession of the property, title to which he seeks to establish in replevin.

3. SAME—PLAINTIFF IN POSSESSION.

Plaintiff may not maintain replevin to establish title to chattels of which he is in possession at the time suit is brought either at common law or Acts Pa. 1901 (P. L. 88, No. 61), regulating procedure in such action.

In Error to the District Court of the United States for the Western District of Pennsylvania.

Digitized by Google

John C. Bane, for plaintiff in error.
A. C. Stein, for defendant in error.

Before DALLAS and GRAY, Circuit Judges, and BRADFORD, District Judge.

BRADFORD, District Judge. This case is before us on a writ of error taken for the reversal of the judgment of the district court for the Western District of Pennsylvania in an action of replevin brought by the Merchants Savings and Trust Company of Pittsburg, Trustee in bankruptcy of Henry Weinstock, trading as the Grand Rapids Furniture House, against Sophia Sloan. The property mentioned in the writ of replevin and declaration consisted of furniture, carpets and other household goods, formerly belonging to the bankrupt and alleged to have been transferred by him on or about March 16, 1905, to Mrs. Sloan without adequate consideration, and for the purpose of cheating and defrauding his creditors. It appears from the record and is not disputed, but admitted, that most of the property included in the writ was at the time the action was brought in the possession of the trustee in bankruptcy; and it further appears from the record that it is at least doubtful whether the residue of the property mentioned in the writ was not at that time also in its possession. After all the evidence in the case had been adduced the counsel for Mrs. Sloan submitted a motion that the jury be directed to return a verdict for the defendant; one of the grounds on which the motion was based being as follows:

"(f) It is alleged in the declaration, filed by the plaintiff in said action, that 'plaintiff has made demand of defendant for the delivery of said goods and merchandise, but defendant has neglected and refused and still neglects and refuses to deliver possession thereof to the plaintiff'; and it appears by the evidence introduced by the plaintiff that the plaintiff was in possession of said goods and merchandise at and before the date when said action was brought and the writ of replevin was issued therein; and it also appears by the evidence introduced by the plaintiff that, at the time said action was brought and the writ of replevin was issued therein, the defendant was not in possession of said goods and merchandise; and it further appears by the evidence introduced by the plaintiff that all of said goods and merchandise have heretofore been sold by the plaintiff."

The court overruled the motion and the case having been submitted to the jury without argument a verdict was returned in favor of the plaintiff. Notwithstanding the fact that the subject of possession was thus brought to its attention, the court did not submit to the jury any question touching the possession by the plaintiff at the time of the commencement of the action of the whole or any portion of the property mentioned in the writ and declaration, or in any manner refer to that subject. On the contrary it confined itself to the question of title, and on that point, among other things, charged the jury as follows:

"If you find the title to the goods in question at the time of the bringing of this suit was in the Merchants Savings & Trust Company, the Trustee of Henry Weinstock, it is your duty to find in favor of the plaintiff in the case."

This portion of the charge is the subject of the third assignment of error. The assumed exclusiveness of the question of title was ac-

Digitized by Google

centuated in other portions of the charge, among which are the following:

"It is an action of replevin; and, in the shape in which this action is, it resolves itself into the question of the title of the goods in question. * * * If you find the title to those goods is in Sophia Sloan, the defendant, it is your duty to find a verdict in her favor. * * * The question for you to determine under the evidence here is whether the goods, the title to the goods, remained in Henry Weinstock for the benefit of his creditors, or whether the title to those goods was vested in Sophia Sloan. * * * If you find that this purchase was in good faith for a present fair consideration, return a verdict in favor of this defendant, Sophia Sloan. If you find it was not, that the title to these goods was in the bankrupt, you will find a verdict in favor of the plaintiff in this case."

The relevancy or materiality of the question of possession was wholly ignored. We think there was reversible error in the portion of the charge quoted in the third assignment. Certainly, aside from the statute of Pennsylvania, No. 61 of the acts of the Session of 1901 (P. L. 88), replevin is a possessory action brought by the plaintiff for the recovery by him of the possession of personal property. It is true that the question of title may be litigated in the action, if properly brought, but the action cannot properly be brought by one who is already in possession of the property mentioned in the writ and declaration. Nor do we find anything in the state statute referred to which either requires or will permit an action of replevin to be brought by one who is already in possession. Section 1 provides for a replevin bond, with condition as follows:

"If the plaintiff or plaintiffs fail to maintain their title to such goods or chattels, he or they shall pay to the party thereunto entitled the value of said goods and chattels, and all legal costs, fees and damages, which the defendant or other persons, to whom such goods or chattels so replevied belong, may sustain by reason of the issuance of such writ of replevin."

Section 2 of the act provides as follows:

"If any other person than the defendant named in the writ be found in possession of the goods and chattels he shall be duly served with the writ, and his name added as a party defendant to the cause. The writ shall command the sheriff to serve the party in possession as well as the defendant named."

The statute requires the writ to be served on the party in possession, and the idea that the writ shall be served on the person who sues it out is absurd. There is nothing in the statute to countenance the notion that the action will lie for the recovery of property of which the person suing is already in possession. Hence, the question of title to the property replevied can legitimately arise in an action of replevin only when brought by one out of possession; for, if the plaintiff be in possession, the action cannot be sustained at all. It follows as a corollary from what has been said that section 1 of the state statute in providing for the execution and filing of a replevin bond does not exact, authorize or countenance the giving of such bond in any case in which the plaintiff is in possession of the property for which he mistakenly brings his action. A bond required under such circumstances is exacted without legal authority and is a nullity. The judgment below must be reversed, with costs, and a venire facias de novo awarded; and it is so ordered.

Digitized by Google

(160 Fed. 769.)

MERCHANTS' COAL CO. v. FAIRMONT COAL CO. et al.

(Circuit Court of Appeals, Fourth Circuit. January 15, 1908.)

No. 779.

1. JUDGMENT—PERSONS CONCLUDED—EFFECT AS BAR TO SUBSEQUENT PROCEEDING.

The judgment of a federal court in a mandamus suit brought by a coal company operating mines on the line of a railroad against the railroad company to compel a fair distribution of cars, upon an allegation of discrimination in violation of the interstate commerce law, does not inure to the benefit of any other operator not a party to the suit, nor bar an independent suit or proceeding by such operator on its own behalf in court or before the Interstate Commerce Commission to secure similar relief; nor is it estopped to maintain such independent suit or proceeding by the fact that it aided the relator in the prior suit or contributed to the expense thereof.

[Ed. Note.—For cases in point, see Cent. Dig. vol. 30, Judgment, §§ 1190, 1191.]

2. CARRIERS—INTERSTATE COMMERCE ACT—CUMULATIVE REMEDIES FOR VIOLATION.

An action in a federal court for a mandamus, under Act March 2, 1889, c. 382, § 10, 25 Stat. 862 [U. S. Comp. St. 1901, p. 3172], amendatory of the interstate commerce act, which authorizes such action by a shipper against an interstate carrier to compel a compliance with the act, and further provides that "the remedy hereby given by writ of mandamus shall be cumulative, and shall not be held to exclude or interfere with other remedies provided by this act or the act to which it is a supplement," does not preclude the relator or others from proceeding in respect to the same matter by petition to the Interstate Commerce Commission under section 13 of the original act of Feb. 4, 1887, c. 104, 24 Stat. 383 [U. S. Comp. St. 1901, p. 3164], and the court in the mandamus suit is without power on an ancillary bill to enjoin such proceeding.

Appeal from the Circuit Court of the United States for the District of Maryland.

William A. Glasgow, Jr., and George Weems Williams (Frank Gosnell, on the brief), for appellant.

Edgar H. Gans (Charles Markell, Jr., on the brief), for appellees.

Before PRITCHARD, Circuit Judge, and PURNELL, District Judge.

PRITCHARD, Circuit Judge. This is an appeal from an order or decree of the Circuit Court of the United States for the District of Maryland passed on the 21st day of October, 1907, granting a preliminary injunction restraining the appellant from prosecuting its petition against the Baltimore & Ohio Railroad Company before the Interstate Commerce Commission, and restraining the said railroad company from answering or defending said petition. On the 4th day of October, 1907, the appellees, who are the Fairmont Coal Company, Clarksburg Fuel Company, Southern Coal & Transportation Company, Pittsburg & Fairmont Fuel Company, Somerset Coal Company, Consolidation Coal Company, and Cumberland & Pennsylvania Railroad Company, and who, with the exception of the Cumberland & Pennsylvania Railroad Company, are engaged in the mining, shipping, and selling

Digitized by Google

of coal, filed their bill of complaint in equity against the appellant, which is a West Virginia corporation, also engaged in the mining, shipping and selling of coal, and against the Baltimore & Ohio Railroad Company, which is a Maryland corporation engaged as a common carrier in interstate commerce. The object of the bill was to have the appellant enjoined from prosecuting its petition before the Interstate Commerce Commission against the railroad company, and to restrain the railroad company from answering or defending said petition. The bill of complaint alleges substantially as follows:

That in January, 1907, there was filed in the Circuit Court of the United States for the District of Maryland a petition for mandamus by the United States of America ex rel. Pitcairn Coal Company. against the Baltimore & Ohio Railroad Company and certain other corporations (154 Fed. 108), all of which other corporations were organized under the laws of West Virginia for the purpose of mining and disposing of coal, and operated coal mines grouped about the Monongah division of the Baltimore & Ohio Railroad in West Virginia. That said petition for mandamus substantially charged the Baltimore & Ohio Railroad Company with violating the interstate commerce law in such a way as to prevent the relator, the Pitcairn Coal Company, from having interstate traffic moved by that railroad company upon terms and conditions as favorable as those given by the railroad company for like traffic under similar conditions to those who are complainants in said bill of complaint. That said petition for mandamus charges that the railroad company, in its distribution and assignment of cars for service in shipment from the coal mines operated along its road, subjected the relator and all of the other independent coal operators who were made defendants in said petition to undue and unreasonable prejudice and disadvantage in its system of coal distribution, and that all of those who are now the complainants in said bill of complaint, except the Cumberland & Pennsylvania Railroad Company, were privileged corporations in whose favor the railroad company in the supply of cars gave undue and unreasonable preference and advantage, and that when the supply of cars on the Baltimore & Ohio Railroad Company was insufficient to fill all orders cars were distributed by said company on a percentage basis to all the mines in the Monongah division, but that before such distribution was made certain arbitrary assessments of cars were made reducing the said total number of cars to be distributed on said percentage basis as follows: (1) All cars placed at mines for the fuel of the railroad company were not charged against the percentages to which the mines furnishing such fuel were entitled. (2) When foreign railroads—that is, companies other than the Baltimore & Ohio Railroad Company—sent their own cars for coal to mines on the Baltimore & Ohio Railroad, such fuel cars were not charged against the percentages to which such mines were entitled. (3) Cars owned by operators and commonly known as "individual cars" were placed at the mines of their owner, and not charged against the percentages of such mines. (4) That whenever a coal shipper on the railroad company shipped cars to Curtis Bay, a tide terminal of the railroad company, if such cars were handled prop-

Digitized by Google

erly in any one month such shipper was allowed in the succeeding month a premium of fifty per cent. of the number of cars so shipped in addition to his regular percentage. (5) That when certain consignees of coal shipped by those who are now complainants in said bill of complaint, on the line of said railroad company sent their own individual cars for coal to the mines of said complainants on the railroad such cars were not charged against the percentage of the mines to which they were sent.

That the petition for mandamus further asserted that all of these exceptions, limitations, and rules as aforesaid were made to the undue advantage and preference of the appellees, except the Cumberland & Pennsylvania Railroad Company, which is not a coal company, and for the reason that the Baltimore & Ohio Railroad Company was financially interested in said corporation, and that the Baltimore & Ohio Railroad Company arbitrarily took from its equipment a very large number of cars each day, and assigned the same to the Cumberland & Pennsylvania Railroad Company at its junction with the Baltimore & Ohio Railroad Company at Cumberland, and thus took from its equipment a large number of cars to which the shippers on its own lines were entitled, and this arbitrary allotment of cars was unjust, unfair, and unreasonable, and gave an undue and unreasonable advantage to shippers over the Cumberland & Pennsylvania Railroad Company, and subjected the Pitcairn Coal Company and other shippers of coal on the Monongah division to undue and unreasonable prejudice and advantage. That the petition further stated that the motive for the undue preference and advantage given to the appellees was found in the ownership by the railroad company of a majority of the capital stock of the Consolidation Coal Company, one of the defendants in said petition and one of the appellees herein, which had been sold prior to the filing of said petition, but in which the railroad company was still interested by reason of the balance of the purchase money due to it from the sale of said stock. That the petition prayed that in the event of a scarcity of cars to be furnished by the railroad company to shippers of coal on the Monongah division that the railroad company be required to furnish the relator with the proper percentage of cars without deducting the arbitraries above mentioned. That the railroad company on February 15, 1907, filed its return to said petition, wherein it denied that its distribution of coal cars to any coal company served by it violated the interstate commerce law, or had the effect of giving the appellees any undue advantage or preference. That the appellees filed an answer to the petition (a copy of the answer was filed as an exhibit with and as a part of the bill of complaint), and that the other defendants filed formal answers to the said petition (a copy of one of said answers was filed as an exhibit and as a part of said bill of complaint) asking that their rights might be adjudicated and determined.

That when said petition for mandamus was at issue the court took evidence on all the allegations thereof as the same were put in issue, and, after a full hearing, adjudicated all matters involved in said mandamus proceeding, determining that the system of coal car distribution of the railroad company did not violate the interstate commerce

Digitized by Google

law, and did not give any undue or unreasonable preference to the appellees except that the individual cars owned by them should be charged against the percentages of their mines, but that such individual cars should not be used by the independent operators. That on July 8, 1907, the court signed an order for the issuance of a mandamus requiring the railroad company, in case of car shortage, without discrimination, exception, or limitation, and upon conditions as favorable as those given to any other shipper, to furnish to the Pitcairn Coal Company for the transportation of its coal, and to those shippers in like condition as the Pitcairn Coal Company, their just and fair proportion of the total car supply on the said railroad at that time properly distributable by the railroad company on the Monongah division, and, in making the pro rata distribution of car supply for the shipment of coal from the mines on the railroad and to the shippers thereon, the railroad company should include in the available car supply as the basis of calculation for distribution to the Pitcairn Coal Company and all shippers on the Monongah division the individual cars of mine operators used on the railroad, and charge such individual cars against the percentage which the mines using such individual cars are entitled. That the railroad company and the Pitcairn Coal Company both appealed from the judgment of the court in the mandamus proceeding. The appeal of the railroad company and the appellees herein was accompanied by a supersedeas bond of the Pitcairn Coal Company. That an examination of the mandamus proceeding will show that the question of car distribution of the railroad among all the mines on its lines was before the court therein, not only as the system of car distribution affected the parties to the proceeding, but as it involved all other owners of mines along the railroad. That all the allegations of the petition as to the undue preferences presented an issue in which all owners of mines along the railroad were directly interested, and that the nature of the mandamus proceeding was such that any mine owner could have intervened therein and become a party. That evidence was taken in said proceeding as to the general system of car distribution, and that the president of the appellant testified therein as to the operation of the system in the Sommerset region in Pennsylvania. That the Pitcairn Coal Company and other independent operators, including the appellant, "were parties to an agreement by which these alleged preferences to the appellees should be brought before the court of the United States, and that as a member of the said organization promoting said litigation the Merchants' Coal Company (the appellant) did agree that the rights of the so-called independent operators should be presented to the court in a test case with the said Pitcairn Coal Company as relator, the object being by said agreement to have the rights of all the independent coal operators who had the same grounds of complaint against the system of the Baltimore & Ohio Railroad Company tried in one litigation, and to that end the said Merchants' Coal Company united in the agreement to employ counsel and did with others employ counsel to fight said litigation, and did contribute to the expense of said litigation." That the officers of the appellant took an active and open part in said litigation as representing the appellant and actually gave evi-

Digitized by Google

dence therein, and that said litigation was brought by a number of independent operators along the line of the railroad company, of which the appellant was one. And that the said litigation was as much under its control as under the Pitcairn Coal Company and was brought for the purpose of protecting the rights and claims of the appellant against the appellees quite as much as it was brought to protect the claims of the Pitcairn Coal Company.

That thereafter, on September 18, 1907, the appellant filed a petition before the Interstate Commerce Commission in which it is alleged that it operated mines in West Virginia and Pennsylvania along the lines of the Baltimore & Ohio Railroad Company, and complained of the system of car distribution enforced by such railroad company which permitted the use of fuel cars, foreign fuel cars, and individual cars without deducting the same from the percentages chargeable to the mines using the same, and which allowed a premium or addition to their percentages to shippers under certain circumstances, and charged that this system gave the persons enjoying the use of the arbitrary cars an undue and unreasonable preference. That the petition filed before the Interstate Commerce Commission also alleged that a part of the equipment owned by the Baltimore & Ohio Railroad Company and which should be supplied to shippers of coal upon its lines requiring the same is supplied by the said railroad company to the Cumberland & Pennsylvania Railroad Company for loading coal at the mines situated on the latter's railroad, a majority of which mines are owned by the Consolidation Coal Company, and that the depletion of its coal car equipment is contrary to the interstate commerce act, and that the railroad company thereby discriminates against the appellant. That the said petition filed before the Interstate Commerce Commission further charges that the railroad company aforesaid is interested in the Consolidation Coal Company (one of the appellees), which in turn owns the stock of other companies largely engaged in the shipping of coal, and asks for an investigation into this alleged interest, and whether such interest shows and accounts for its discrimination against the appellant. That the other companies referred to in said petition filed before the Commission whose stock is owned by the Consolidation Coal Company for the appellees herein, so that while said petition is only against the railroad company it is virtually directed against the appellees, as all the alleged preferences claimed against are in favor of the appellees. That every question presented by the said petition before the Interstate Commerce Commission, as will appear from an inspection of the exhibit filed with the bill of complaint, was fully adjudicated and determined by the Circuit Court in the Pitcairn Coal Company Case, and that if the appellant is permitted to prosecute said petition before the Interstate Commerce Commission, not only will the railroad company and the appellees be obliged to defend the method of car distribution of the railroad company by the same evidence which was adduced in the former proceeding, but any order that the Interstate Commerce Commission would be asked by appellant to pass would, if effective, nullify the rights of the appellants as adjudicated by the Circuit Court. That the prosecution of the petition before the

Digitized by Google

Interstate Commerce Commission, a hearing on which had been set down for October 8, 1907, would inflict irreparable injury upon the appellees, is simply vexatious and in manifest disregard of the binding efficiency of the adjudication by the Circuit Court, which had complete jurisdiction over the whole controversy, sought to be reopened, and that the court had jurisdiction to protect the effectiveness of its own adjudication through its jurisdiction over this their ancillary bill of complaint.

These are substantially the averments of the bill of complaint in this case.

The appellant did not file its answer, but at the hearing of the application for a preliminary injunction filed the affidavit of its president, Mr. Boswell, which showed: That prior to the institution of the Pitcairn Coal Company mandamus proceeding referred to in the bill of complaint, a meeting of coal operators operating on the lines of the Baltimore & Ohio Railroad Company was held in Baltimore to consider ways and means of securing a fair distribution of cars to the mines on the said railroad, and that the affiant was present at the meeting, representing the appellant, and agreed to contribute a certain sum of money toward the prosecution of the suit or suits for the enforcement of the rights of the coal operators to a fair and equal distribution of cars. There was no agreement at that time as to what suit or suits should be brought, but that subsequently the operators who contributed to the fund were advised that it was best to confine the effort to mandamus proceedings to force a fair and equal distribution of cars to be operated on the Monongah division alone of said railroad, and thereupon the mandamus proceeding was instituted, and in it the most, if not all, of the operators on the Monongah division were parties defendant to the mandamus proceeding. That the coal operations of the Merchants' Coal Company (appellant) were not and are not on the Monongah division of said railroad, and that the Merchants' Coal Company was not a party to the proceeding instituted by the Pitcairn Coal Company, and while it is true that its president and several officers and employés of the Merchants' Coal Company were called as witnesses by the Pitcairn Coal Company at the trial of the mandamus proceeding, that the Merchants' Coal Company was advised, prior to the trial of the mandamus proceeding aforesaid, that the judgment therein was not binding so far as the Merchants' Coal Company's rights were concerned, and that the mandamus, if issued, would not require the Baltimore & Ohio Railroad to furnish to the Merchants' Coal Company its fair and just proportion of cars. That there was no agreement between the Baltimore & Ohio Railroad Company or the other defendants to said mandamus proceeding and the plaintiff therein, so far as the affiant knows, that the case of Pitcairn Coal Company should be a test case, and that the Merchants' Coal Company never agreed with the Baltimore & Ohio Railroad Company or any one else that the case of the Pitcairn Coal Company, above referred to, should be a test case. That he, the affiant, is advised that the judge of the Circuit Court of the United States for the District of Maryland in the case of Pitcairn Coal Company v. Baltimore &

Digitized by Google

Ohio Railroad Company et al., above referred to, held that there was no sufficient evidence in that case to show that the allotment of cars to the Cumberland & Pennsylvania Railroad Company by the Baltimore & Ohio Railroad Company was an unfair allotment and that it worked an unjust discrimination against the Pitcairn Coal Company. That the said allotment of cars to the Cumberland & Pennsylvania Railroad Company is an unfair allotment and works an unjust discrimination against the Merchants' Coal Company, and affiant expects to be able to prove this fact before the Interstate Commerce Commission upon a hearing of its complaint above referred to, and that question is one of the main issues raised in the proceeding aforesaid before the Interstate Commerce Commission. That the petition for mandamus in the case of the Pitcairn Coal Company v. Baltimore & Ohio Railroad Company was confined to alleged unfair and unjust treatment by the Baltimore & Ohio Railroad Company of coal operators on the Monongah division of said road, and the question of how other operations in different territories from the Monongah division were treated was not an issue in that case, and that opportunity to investigate the conditions in other territories than the Monongah division was not offered at that time, although that during the progress of the case the methods of the Baltimore & Ohio Railroad Company in other districts were frequently referred to, and in said suit no opportunity was given to the Merchants' Coal Company to appear by counsel and introduce evidence or cross-examine witnesses. That affiant aided in every way he properly could the Pitcairn Coal Company in its litigation with the Baltimore & Ohio Railroad Company above referred to, and hoped that, if the Baltimore & Ohio Railroad Company was required to fulfill its duty with the Pitcairn Coal Company and the operators on the Monongah division, it might help the Merchants' Coal Company thereafter in asserting its right to have a fair and equal distribution in its territory. But affiant was advised at the time and understood that the judgment in the Pitcairn Case was not to be binding on the Baltimore & Ohio Railroad Company so far as the Merchants' Coal Company was concerned, and again denies that there ever was any agreement with any individual, firm, or corporation that the case of Pitcairn Coal Company v. Baltimore & Ohio Railroad Company should be a test case, so far as the rights of the Merchants' Coal Company were concerned, or should, in anywise affect or determine its rights.

No affidavits or answers were filed by the railroad company. The railroad company declined in writing to appeal or to join in this appeal.

The statement of facts in this case shows that the Pitcairn Coal Company, in pursuance of section 23 of the interstate commerce act (Act March 2, 1889, c. 382, § 10, 25 Stat. 862 [U. S. Comp. St. 1901, p. 3172]) instituted proceedings in the Circuit Court of the United States for the District of Maryland, in an action entitled, The United States of America ex rel. Pitcairn Coal Company v. Baltimore & Ohio Railroad Company et al., 154 Fed. 108, for the purpose of determining whether there had been a fair and equal distribution of car service

Digitized by Google

within the Monongah division. After a full and complete hearing, judgment was rendered in the Circuit Court, and both parties appealed from the judgment thus rendered, and that case, on appeal, is now pending in this court.

The appellant is engaged in operating coal mines on the Cumberland & Connellsville or Pittsburg divisions on the line of the Baltimore & Ohio Railroad Company. Subsequent to the institution of the mandamus proceeding hereinbefore mentioned, to wit, on the 18th day of September, 1907, the appellant filed a petition with the Interstate Commerce Commission, asking that body to take up and determine certain questions pertaining to the distribution of car service within a certain territory. This petition was filed in pursuance of section 13 of the interstate commerce act (Act Feb. 4, 1887, c. 104, 24 Stat. 383 [U. S. Comp. St. 1901, p. 3164]). Thereafter, to wit, on the 4th day of Ocber, 1907, the Circuit Court granted a preliminary injunction restraining the appellant from prosecuting its petition against the Baltimore & Ohio Railroad Company before the Interstate Commerce Commission, and restraining said railroad company from answering or defending such petition. On the 21st day of October, 1907, the case was heard on the bill, affidavits, and exhibits thereto, together with the affidavit of Thos. T. Boswell, president of the appellant, the Merchants' Coal Company, and after considering the allegations of the bill, as well as the exhibits filed therein, the court made an order continuing the preliminary injunction theretofore granted restraining appellant, its officers, attorneys, from further prosecuting its petition before the Interstate Commerce Commission until the further order of the court.

It is insisted by counsel for appellees "that the questions decided by the Circuit Court for the District of Maryland are precisely the same which it is sought to reopen before the Interstate Commerce Commission." It is also insisted that while the independent operators who were parties to the suit for mandamus in the proceeding before the Circuit Court were all engaged in coal operations in the Monongah division of the Baltimore & Ohio Railroad Company, yet the system of coal car distribution which was attacked in that proceeding was a system that was applied, not only to the Monongah division of the Baltimore & Ohio Railroad Company, but to all other divisions of said railroad company. It is also insisted that the appellant company employed counsel and was present at the hearing of the mandamus proceeding, and that certain of its officials then and there testified as to the manner of distribution of car service in the other divisions of the said railroad company. Counsel for appellees also insist that the questions sought to be raised by appellant in its petition before the Interstate Commerce Commission are similar to those passed upon by the Circuit Court in the mandamus proceeding, and therefore the action of the lower court in restraining appellant from proceeding before the Interstate Commerce Commission was proper. That it is not necessary to make every coal operator in the various divisions interested in the question a technical party, where the parties are numerous, and where the suit is an object common to all of them, and while all parties interested may not be made parties to the proceeding, yet, it is really a suit on behalf of the parties instituting

Digitized by Google

the same and all others interested in the same way. It is further insisted by counsel that the rights of the appellees are not only similar, but are identical with those of the appellant, and that the suit in the mandamus proceeding was instituted for the purpose of compelling the railroad companies to perform certain duties required by the interstate commerce act, which, when carried out under the rule of equality, would afford equal protection to all parties in a situation similar to that of the petitioners in the original proceeding.

While it appears from an inspection of the record that appellant and other parties similarly situated appeared and consulted with the plaintiff in the mandamus proceeding, and that some of the officers of the appellant company testified in said proceeding, nevertheless we are unable to find anything in the record in that case which tends to support the contention that the matter then being litigated was to be treated by the companies not parties to that suit as a "test case." It is not alleged by the appellees that the appellant entered into an agreement with the defendants to the mandamus proceeding that the litigation therein should be treated as a "test case." An agreement between the plaintiff in the mandamus proceeding and certain persons who were not parties thereto that the litigation in said suit should constitute a "test case" could have no binding effect upon the defendants in the absence of an agreement with the defendants. It is well settled that estoppels to be binding must be mutual. Even if the Pitcairn Coal Company should succeed ultimately in securing the relief sought to be obtained in the mandamus proceeding, nevertheless the appellant and others similarly situated, who were not parties to that proceeding, could not invoke the aid of the court in that proceeding to compel the defendants to grant them the relief to which they might be entitled under the provisions of the statute.

Suppose that the appellant should request the Baltimore & Ohio Railroad Company to grant it a distribution of car service in accordance with the judgment granted in the mandamus proceeding, and the railroad company should refuse to comply with such request, what would be the remedy, under the circumstances, to which appellant would be entitled? The railroad company could not be attached for contempt for a failure to comply with a request of this character from a person who was not a party to the proceeding in which the judgment was entered against the railroad company, and the writ of mandamus obtained on behalf of the Pitcairn Coal Company could not be used for the purpose of enforcing the rights of those who were not parties to the proceeding in the first instance. The remedy by mandamus is personal in its character, and from the very nature of things can only inure to the benefit of those who may be parties plaintiff in the proceedings in which it may be obtained. Nor would the appellant be entitled under any circumstances to be made a party to the mandamus proceeding after a judgment had been rendered, for the purpose of enforcing any rights that might be conferred upon it by the statute. A judgment obtained in a mandamus proceeding of this character can only be used as a precedent in a trial of another cause involving the same question, and cannot be pleaded as a bar in such action.

Digitized by Google

However, if the contention of appellee as to the effect of the judgment in the mandamus proceeding be correct, then it would be res judicata as to appellants and all other parties similarly situated, and in that event the appellees would not be entitled to equitable relief by injunction. In discussing this phase of the question the Supreme Court of the United States in the case of Litchfield v. Goodnow, Adm'r, 123 U. S. 549, 8 Sup. Ct. 210, 31 L. Ed. 199, says:

"The defense of prior adjudication is disposed of by the fact that Mrs. Litchfield was not a party to the suit in which the adjudication relied on was had. At the time of the commencement of the suit she was the owner of her lands and they were described in the bill, but neither she nor any one who represented her title was named as a defendant. She interested herself in securing a favorable decision of the questions involved as far as they were applicable to her own interests, and paid part of the expenses; but there was nothing to bind her by the decision. If it had been adverse to her interest, no decree could have been entered against her personally either for the lands or the taxes. Her lands were entirely separate and distinct from those of the actual parties. A decree in favor of or against them or their title was in no legal sense a decree in favor of or against her. She was indirectly interested in the result, but not directly. As the questions affecting her own title and her own liability for taxes were similar to those involved in the suit, the decision could be used as a judicial precedent in a proceeding against her, but not as a judgment binding on her and conclusive as to her rights. Her rights were similar to, but not identical with, those of the persons who were actually parties to the litigation."

The conduct of the appellant company as described in the affidavit of its president, Mr. Boswell, cannot be construed to mean that the agreement between parties to the mandamus proceeding was such as to estop those who were not made parties in such proceeding from instituting proceedings under section 23 before the Interstate Commerce Commission. While the rights of appellant in many respects were similar, they were not identical with the rights of the Pitcairn Company. It is not only alleged in the petition filed by the appellant before the Interstate Commerce Commission that there was an unequal distribution of car service, but it is also alleged that there was an inadequate supply of cars. Subsection of paragraph 2 of the petition filed before the Interstate Commerce Commission reads as follows:

"Which percentage or allotments of cars to complainant are entirely insufficient for its ordinary needs and requirements, are inequitable, unjust, and unfair."

This allegation raises a new and distinct issue which was not and could not within the scope of the pleading have been passed upon in the mandamus proceeding, and affords a strong reason why the court should not interfere by injunction with the proceedings pending before the Interstate Commerce Commission.

It further appears from the record that the petition filed before the Interstate Commerce Commission contains, among other things, an allegation to the effect that there was an unequal distribution of car service between the Monongah division and the division or divisions in which the appellant is operating, and this raises still another issue, which was not raised or considered in the mandamus proceeding and affords another reason why an interference with or a stay of the pro-

Digitized by Google

ceeding by injunction before the Interstate Commerce Commission would not be proper.

Section 23, in pursuance of which the mandamus proceedings were instituted, contains the following proviso:

"Provided, that the remedy hereby given by writ of mandamus shall be cumulative, and shall not be held to exclude or interfere with other remedies provided by this act or the act to which it is a supplement."

This proviso clearly indicates that it was the intention of Congress that the remedy by mandamus should be cumulative. In the case of People v. Superior Court of New York, N. Y., 10 Wend. (N. Y.) 285–294, the court in referring to the word "cumulative" said:

"The definition of the word 'cumulative' is that which augments by addition; that is added to something; in law, that augments as evidence, facts, or arguments of the same kind."

Webster:

"It is derived from the latin cumulo to heap, or cumulus a heap."

Again in the case of Regina v. Eastern Archipelago Co., 18 Eng. Law & Eq. 167–183, Judge Coolidge, says:

"The term 'cumulative' is not, I think, very correctly applied here; where one thing is cumulative on another, whether it be remedy, penalty, or power, we are speaking commonly of two things which are at least consistent and might, without incongruity, be applied at the same time, attachment and summary proceeding, fine and imprisonment, action for breach of covenant and ejectment for forfeiture. Two ways of doing the same thing where one or two can in fact be used may make a case of election, but they are hardly cumulative."

The learned judge in that case clearly draws the distinction between where one thing is cumulative on another and where there are two ways of doing the same thing, where only one of them in fact can be used.

Section 23 is a part of an act which is supplemental to the interstate commerce act, and was passed several years after the main body of the act which contained sections 9 and 13 was adopted. This section being intended to supplement the interstate commerce act, and containing as it does a plain proviso that the writ of mandamus shall be cumulative, clearly indicates that it was the intention of Congress that the remedy granted in section 13 should be treated as being consistent with the remedy granted by section 23, and that it could, without incongruity, be applied at the same time. That this was the purpose of Congress is evidenced by the fact that, in every instance where the remedy provided was intended to be exclusive, such intention was made clear and explicit by adding a proviso to that effect as is shown by the proviso contained in section 9. While two remedies are afforded shippers in section 9, it is expressly provided therein "that such person or persons shall not have the right to pursue both of said remedies, and must in each case elect which of the two methods of procedure therein provided for he or they shall adopt." Thus Congress clearly provided that while two remedies were given by section 9 they should not be treated as cumulative, and, in order that there might be no doubt as to the proper construction to be placed upon that section, it was clearly provided

Digitized by Google

that one seeking to avail himself of such remedies should be required to elect, and that the adoption of one excluded the other. However, there is another reason why one who has proceeded under section 23 is not precluded from pursuing his remedy under section 13. The proviso of section 23 not only declares the remedy by mandamus to be cumulative, but it also provides that the remedy by mandamus "shall not be held to exclude or interfere with any other remedy" provided by the act. This obviously means that one who proceeds by mandamus is not precluded from resorting to the other remedies afforded by the act.

If Congress had intended that the remedy afforded by section 23 was to be exclusive, it would have added a proviso similar to the one incorporated as a part of section 9, and not having done so it is manifest that it was the intention of Congress that the remedy provided by section 23 was not to be treated as exclusive, and especially inasmuch as it is expressly provided that the remedy granted therein shall be cumulative, and shall not be held to exclude or to interfere with other remedies granted by the act. Any other construction of this proviso would be in direct conflict with the plain provisions of the law, and, in view of this provision, we are of opinion that the court below was without power to restrain the appellant from proceeding before the Interstate Commerce Commission under the provisions of section 13, and that the court did not have jurisdiction of the subject-matter sought to be litigated in this proceeding.

The decree of the Circuit Court authorizing the issuance of the injunction herein is therefore reversed, and the cause is remanded to the lower court with directions to dismiss the bill filed herein.

Reversed.

(160 Fed. 780.)

SLOSS-SHEFFIELD STEEL & IRON CO. v. DRANE.

(Circuit Court of Appeals, Fifth Circuit. March 31, 1908. On Rehearing, April 20, 1908.)

No. 1,516.

DEATH—CHILDREN—ACTION BY PARENTS—MEASURE OF DAMAGES.

Code Ala. 1896, § 25, provides that a father, or, in certain cases, the mother, may sue for an injury to a minor child, a member of the family. Section 26 declares that, when the death of a minor is caused by the wrongful act of another, the father or mother or personal representative of the minor may sue and recover "such damages as the jury may assess," and section 27 provides that a personal representative may maintain an action and recover such damages as the jury may assess for the wrongful act of another, whereby the death of his testator or intestate was caused, the proceeds of which are distributable under the statute of distributions, without liability for debts. *Held*, that in an action by a father for the wrongful death of his minor son, he was not limited to the recovery of compensatory damages only, but was entitled to recover such damages as the jury might assess under all the facts and circumstances in the case, uninfluenced by passion, sympathy, or feeling.

[Ed. Note.—For cases in point, see Cent. Dig. vol. 15, Death, § 123.]

Newman, District Judge, dissenting.

Digitized by Google

In Error to the Circuit Court of the United States for the Northern District of Alabama.

R. W. Walker and Jno. P. Tillman, for plaintiff in error.
Travis Williams, for defendant in error.

Before McCORMICK, Circuit Judge, and NEWMAN and BURNS, District Judges.

McCORMICK, Circuit Judge. This was a suit by Polk Drane, the defendant in error, to recover damages for the death of his minor son, Carleton Drane, who was alleged to have been employed by the defendant without the plaintiff's knowledge or consent. Each count of the complaint alleges that the minor was employed without the knowledge and consent of the father, and put to work in a dangerous place. There was a judgment in favor of the plaintiff. The plaintiff in error assigns as errors the action of the trial court in overruling demurrers to the complaint, in sustaining demurrers to pleas interposed by the defendant, in declining to give the affirmative charge requested by the defendant, and in giving certain instructions to the jury, to which exceptions were reserved by the defendant.

The demurrers to the complaint were properly overruled. If the trial court erred in his action on the demurrers to any of the pleas (which we do not affirm), we are satisfied from our view of the whole case that it was an error without injury, as the pleas stricken were not supported by any proof, and the record affirmatively shows that all of the evidence that could have been offered or did exist was admitted under the general issue. On the issue as to whether the minor was a member of the plaintiff's family up to the time the injuries were received, the jury were properly instructed, and the proof on this issue was sufficient to sustain their verdict. The trial court did not err in declining to give the affirmative charge requested by the defendant. Whether it erred in giving certain instructions to the jury touching the measure of damages, to which exceptions were reserved by the defendant, is a question which has received studious consideration, and calls for ampler treatment.

The statutes of Alabama provide:

"A father, or (in certain cases) the mother, may sue for an injury to a minor child, a member of the family." Section 25, Code 1896. "When the death of a minor child is caused by the wrongful act, or omission, or negligence of any person or persons, or corporation, his or their servants or agents, the father, or the mother, in the cases mentioned in the preceding section, or the personal representative of such minor, may sue and recover such damages as the jury may assess; but a suit by the father or mother in such case is a bar to a suit by the personal representative." Section 26. "A personal representative may maintain an action, and recover such damages as the jury may assess for the wrongful act, omission, or negligence of any person or persons, or corporation, his or their servants or agents, whereby the death of his testator or intestate was caused, if the testator or intestate could have maintained an action for such wrongful act, omission, or negligence, if it had not caused death; * * * and the damages recovered are not subject to the payment of the debts or liabilities of the testator or intestate, but must be distributed according to the statute of distribution." Section 27, Code 1896.

Digitized by Google

The Legislature of Alabama passed an act "to prevent homicides," approved February 21, 1860, which provided:

"That, when the death of a person is unlawfully caused by another, the personal representative of the deceased may maintain an action against the latter at any time within two years thereafter, and may recover such sum as the jury deem just, and the amount so recovered shall be distributed as the personal property of an intestate is now distributed, and shall not be subject to the payment of the debts of the deceased." Laws 1859–60, p. 42.

The author of the Revised Code, made some years after the passage of this act, overlooked it, and omitted to embrace it in his revision, and retained several sections of the previous law which the omitted statute has repealed. To remedy this oversight, and to restore the statute, "the Legislature, at the session of 1871–2, re-enacted the statute 'to prevent homicides,' with the same title, and, in all material respects, in language identical with that employed in the act of February 21, 1860." Laws 1871–72, p. 83; Railroad v. Shearer, 58 Ala. 678. Immediately after the re-enactment on February 5, 1872, of the act "To prevent homicides," the Legislature provided by statute that, "When the death of any minor child is caused by the wrongful act or omission of any officer or agent of an incorporated company, or private association of persons, the father of such child, or if the father be not living, the mother, may maintain an action against such corporation or private association of persons, for such wrongful act or omission, and may recover such damages as the jury may assess." This act, for reasons given in the opinion of the court, was held to be unconstitutional in the case of Smith v. Railroad, 75 Ala. 449. Soon thereafter the Legislature passed the act, the provisions of which are now embraced in section 26, above set out. The act "To prevent homicides" applied as well to infants as adults, but it did not, as construed by the courts, create any right of action in the father or mother, and, as soon as this became sufficiently known, the law now in force was passed (Acts 1884–5, p. 99), the sole purpose and effect of which was to extend the right of action already lodged in the personal representative to the father, and, in certain contingencies, to the mother. And while there is no express limitation in this statute to cases in which recovery might have been had by the party injured, had not death ensued, the decisions in Alabama measure the father's recovery under this section of the Code by a consideration of what the child's right would have been had he survived, at least to the extent of confining the former to cases in which the latter might have recovered, though not extending it to all such cases. The only effect which section 26 of the Code had is to give the father, and, in the contingencies named in section 25, the mother, or the personal representative, of a minor whose death has been caused by wrong and negligence, the right to recover damages, and to confine the personal representative's right to cases where neither the father nor mother has instituted suit. The parent cannot sue at all on a cause of action arising under the employer's liability act. Sections 1749–51, Code 1896; McNamara v. Logan, 100 Ala. 187, 14 South. 175.

Digitized by Google

The group of statutory enactments in Alabama, to which we have referred, are all, to some degree, in derogation of the common law. The habit of thought in the professional legal mind, both on the bench and at the bar, receives its trend from the classic, and almost sacred, rules and canons of the common law. The opening words of the trial judge's charge to the jury, "At common law in England and in this country no action can lay at all for the death of a human being," constitute a "proof-text" or a known or admitted major premise in most judicial and professional reasoning on this subject, and the reason which he gives also stamps its complexion on such discussions. He says, "The idea was that the injury was merged in the felony." Touching the terms of one of these statutes, we find in an early case (1883) this language:

"The statute is highly penal in its terms, and must be construed as a penal statute." 75 Ala. 449.

In a later case (1898), this language occurs:

"But while the damages recoverable are undoubtedly, under our former rulings, punitive in their nature, and not compensatory, they are not, in a strict sense, a penalty, nor is the action penal, or quasi-criminal, within the meaning of the constitutional provisions as above construed. The statute is remedial, and not penal, and was designed as well to give a right of action where none existed before, as to 'prevent homicides,' and the action given is purely civil in its nature for the redress of private, and not public wrongs." So. Ry. Co. v. Bush, 122 Ala. 489, 26 South. 168.

The cases arising in Alabama on or under these statutes are numerous. We note in the margin those which we have examined and considered.[1]

The very able and distinguished counsel for the plaintiff in error urges in his printed brief, as he did in his oral argument, that the ruling of the trial court on the question we are now considering is directly opposed to the decision in the case of Williams v. S. & N. A. R. R. Co., 91 Ala. 635, 9 South. 77. He insisted with confidence before us in his oral argument, as he also does in his brief, that "In that case the court expressly limited the recoverable damages to compensation to the father for the loss of the minor's services." And the counsel for the defendant in error in his brief concedes that the

[1] Nashville C. & St. L. Ry. Co. v. Hill, 146 Ala. 240, 40 South. 612; Bube v. Br. L. & P. Co., 140 Ala. 276, 37 South. 285, 103 Am. St. Rep. 33; So. Ry. Co. v. Bush, 122 Ala. 489, 26 South. 168; L. & N. R. R. Co. v. Orr, 121 Ala. 489, 26 South. 35; Ala. G. S. R. R. Co. v. Burgess, 116 Ala. 509, 22 South. 913; Buckalew, Adm'r, v. Tenn. C. I. & R. R. Co., 112 Ala. 146, 28 South. 606; L. & N. R. R. Co. v. Markee, 103 Ala. 160, 15 South. 511, 49 Am. St. Rep. 21; Ala. G. S. R. R. Co. v. Dobbs, 101 Ala. 219, 12 South. 770; Tenn. C. I. & R. R. Co. v. Herndon, Adm'r, 100 Ala. 451, 14 South. 287; McNamara et al. v. Logan, 100 Ala. 187, 14 South. 175; Kansas City, M. & B. R. R. Co. v. Sanders, 98 Ala. 293, 13 South. 57; Richmond & D. R. R. Co. v. Freeman, 97 Ala. 289, 11 South. 800; Williams v. S. & N. A. R. R. Co., 91 Ala. 635, 9 South. 77; L. & N. R. R. Co. v. Orr, 91 Ala. 548, 8 South. 360; Lovell v. De Bardelaben C. & I. Co., 90 Ala. 13, 7 South. 756; Stewart v. L. & N. R. R. Co., 83 Ala. 493, 4 South. 373; Smith v. L. & N. R. R. Co., 75 Ala. 449; S. & N. A. R. R. Co. v. Sullivan, Adm'r, 59 Ala. 272; Savannah & M. R. R. Co. v. Shearer, Adm'x, 58 Ala. 672.

Digitized by Google

case of Williams seems to assert a different doctrine from that for which the defendant in error here contends. With much diffidence we feel constrained to announce our belief that the authority of the case of Williams does not go to the extent claimed. And to show and support our view, we will summarize more largely than is usual with us the report of that case. We begin with the syllabus, which, in substance and almost literally, is as follows:

"1. Under the statute defining the liability of the master (or employer) for injuries to the servant (or employé) while in the service, the right of action for injuries which result in death is given only to the personal representative of the decedent, but a right of action is given to the father by another statute, when the death of his minor child is caused by the wrongful act, omission, or negligence of any person or corporation.

"2. Contributory negligence on the part of the person injured, while employed as a brakeman on a railroad, is a defense to an action for damages, unless the evidence further shows that, after his peril was discovered, or ought to have been discovered, the injury might have been avoided by the exercise of due care and diligence on the part of the engineer.

"3. When the father sues to recover damages for the death of his minor son, who was killed while in the employment of the defendant railroad company as a brakeman, without his consent, the contributory negligence of the minor is no defense to the action, though it might be available as a defense to an action by the minor himself, if death had not ensued from the injuries; but, if the father consented, expressly or by implication, to the employment of the minor in the service, the contributory negligence of the minor is imputed to the father, and defeats his right of action.

"4. The use of 'kicking-switches,' or 'running-switches,' in detaching and propelling cars, cannot be said to constitute negligence, as 'they seem to be in general use by well-regulated railroads,' but there may be negligence in connection with their use, by failing to instruct a young and inexperienced brakeman as to the attendant danger.

"5. The damages recoverable by the father, in a statutory action for injuries resulting in the death of his minor son, are compensatory only, and not punitive."

The following language, quoted by counsel, appears in the opinion:

"At common law the father could sue for and recover damages for an injury not resulting in death wrongfully done to his minor son. The damages were to compensate him for the loss of services. If death resulted, the action was not maintainable. The statute (Alabama) confers the right of action on the father, although death may have resulted. * * * We hold that, under section 2588 of the Code (1886), the father may recover in all cases where at common law he might have recovered if the injury had not resulted in death, and the purpose of this statute was to give the father the right of action, although death resulted from the injury."

The following also appears:

"The second, third, fourth, and fifth counts of the complaint do not negative that the employment was with the father's consent; and these counts are evidently founded upon the supposed liability of the defendant under the employer's act. Sections 2590, 2591, Code of 1886; sections 1749–1751, Code of 1896. The father cannot maintain an action to recover under the employer's act (citing authority). As he cannot recover on these counts, under any state of evidence, there was no error in giving the general charge in favor of the defendant, of which plaintiff can complain, so far as it denied his recovery on these counts. * * * The correctness of this charge involves the inquiry whether any count of the complaint, if sustained by proof, entitled plaintiff to recover; and if so, was there any evidence before the jury, which tended to sustain such count of the complaint.

Digitized by Google

"Code, § 2588 (1886) (26, 1896) provides as follows: 'When the death of a minor child is caused by the wrongful act, or omission, or negligence of any person, or persons, or corporation, his or their servants, or agents, the father may sue, and recover such damages as the jury may assess.'"

Then follows more than two full pages, constituting the body of the opinion, of a discussion bearing upon the question of parties and the application of the doctrine of contributory negligence, concluding with this paragraph:

"The first and last counts of the complaint aver that the decedent was a minor son of the plaintiff; that he was wrongfully employed by the defendant to perform the duties of a brakeman, without the knowledge and consent of plaintiff, and that while attempting to obey the orders of his superior in the performance of his duties as brakeman, he was injured and killed by the wrong and negligence of the defendant's agents or servants. These two counts show a good cause of action, and there was evidence tending to sustain the averments of these two counts. It was error to give the general charge for the defendant."

The only language of the court bearing expressly on the measure of damages is contained in the last three lines of the opinion, as a separate paragraph, viz.:

"The damages recoverable by the father are compensatory, and not punitive. L. & N. R. R. Co. v. Orr, 91 Ala. 548, 8 South. 363, and authorities cited."

We will now notice the Orr Case. This was an action brought by Horace Orr, administrator of the estate of Henry Griffin, deceased, to recover damages for the wrongful and negligent acts of the defendant and its servants, which, as alleged, caused the death of Griffin while in the defendant's service as a brakeman. We quote from the opinion in that case:

"In this state, the statute provides that, in certain cases, the master or employer 'is liable to answer in damages' to the servant or employé. Code, § 2591 (1886). The record presents the direct question, as to what is the measure of damages under the statute, where death results."

After a liberal discussion of the English common-law rules and the evolution of the new doctrines and reference to authorities, the opinion proceeds:

"These principles furnish a correct exposition of our statute; and consequently we declare, under the provision of section 2591 of the Code, neither exemplary nor vindictive damages are recoverable. The purpose of this statute is entirely different from that intended by the act of February 5, 1872 (Laws 1871–72, p. 83), the object of which was to 'prevent homicide.'"

The deceased, at the time he was killed, was 35 years of age. The suit was brought under the employer's act. And, in the decision and opinion of the court, no reference to the damage which a parent might recover for the death of a minor child, a member of the family, was made or would have been pertinent.

The distinguished counsel for the plaintiff in error calls our attention to language taken from the opinion of the court in the case of Nashville, etc., Ry. Co. v. Hill, 146 Ala. 240, 40 South. 612, viz.:

"The gravamen of the eighth count is 'the alleged wrong of the defendant in putting the plaintiff's minor son to work at a dangerous place upon a dan-

Digitized by Google

gerous work without her consent.' The count avers that in consequence of such wrong her son was killed, and the plaintiff (thereby) lost his service during his minority, and plaintiff was damaged by reason of said injury. This damage was the deprivation of his service and wages until he attained his majority."

The complaint originally contained seven counts, and count 8 was added by amendment. The suit was brought within a year from the happening of the accident, but count 8 was not filed until more than a year thereafter. The defendant pleaded the statutes of limitations of one year, upon which issue was joined. We quote from the opinion:

"The comparison of count 1 with count 8 shows that the subject-matter of the latter was within the lis pendens of the original suit, and hence said count introduced by amendment is saved from the ban of the statute of limitations by the doctrine of relation back to the commencement of the suit."

The language, "this damage was a deprivation of his service and wages until he attained his majority," has relation logically to the averment in the count "that, in consequence of such wrong, her son was killed, and the plaintiff (thereby) lost his service during his minority, and plaintiff was damaged by reason of said injury." She could not recover more than she claimed.

The only questions before the court in the Hill Case, were, first, whether the cause was removable to the federal court; second, the question of limitations; and, third, whether the amendment changed the form of action. The counsel in his printed brief says:

"This court itself has expressly decided in the case of McGehee v. McCarley, 91 Fed. 462, 33 C. C. A. 629, that in a suit under section 26 of the Alabama Code the damages recoverable are compensatory, and not punitive, following the decision in Williams v. Railroad Co., supra. The result in the McCarley Case was changed on rehearing (McGehee v. McCarley, 103 Fed. 55, 44 C. C. A. 252), but that change was not due to any change in the opinion of the court as to the construction of section 26 of the Code, but to the discovery by the court that the suit was brought, not under section 26, but under section 27 of the Code."

We reply to this suggestion of counsel by quoting in full all that this court said on the subject in the case of McGehee v. McCarley:

On first hearing:

"We find nothing in the statute law of Alabama which would require a departure from the doctrine announced in Railway Co. v. Prentice, 147 U. S. 101, 13 Sup. Ct. 261, 37 L. Ed. 97. On the contrary, we find that the Supreme Court of Alabama, in construing the very statute under which this action was brought (Code Ala. 1886, § 2588), said that the damages recoverable under that statute are compensatory, and not punitive. Williams v. Railroad Co., 91 Ala. 635, 9 South. 77." McGehee v. McCarley, 91 Fed. 465, 33 C. C. A. 629.

On rehearing:

"This cause was fully stated when it was first passed upon by this court. See 91 Fed. 462, 33 C. C. A. 629. An application for rehearing having been made by the defendant in error, and, the same having been granted, the cause has been fully reargued, and the court has again carefully considered it. The single error heretofore found by this court in the cause was that the trial court refused to charge the jury that only compensatory, and not punitive, damages were recoverable in the cause. On the first hearing of this cause the argument and the briefs treated very imperfectly, and in an unintentionally misleading manner, the matter of the statute law upon which this cause was

Digitized by Google

based. Assisted by the argument and briefs on the rehearing, the court has carefully re-examined the point upon which it ordered this cause to be remanded, and has concluded that the statute law of Alabama permits a personal representative to recover punitive damages in such a cause as the one at bar, and that therefore it is not within the doctrine of Railway Co. v. Prentice, 147 U. S. 101, 13 Sup. Ct. 261, 37 L. Ed. 97. The court has also re-examined the other questions involved in this cause, and finds no error in the cause. It is therefore ordered that the former order of this court, reversing the judgment of the lower court and remanding this cause for a new trial, be, and the same is hereby, annulled and set aside. It is further ordered that the judgment of the lower court be, and the same is hereby, affirmed." 103 Fed. 55, 44 C. C. A. 252.

Does our decision sustain the contention of the plaintiff in error? Does it not, to the contrary, support the contention of the defendant in error? We think that it at least does show the danger of mistaking some inadvertent language in an opinion for the authority of the case.

It would unduly extend this opinion to notice ever so briefly all of the numerous cases in the Alabama Reports which relate to the adoption, development, and application, in that state, of the doctrines of Lord Campbell's Act; but one who will examine the cases cited in the margin will be able to discover sufficient grounds to conclude, as we do, that the trial judge did not err in that part of his charge to the jury, wherein he said to them:

"The section of the Code, under which the plaintiff has brought this suit, says that the plaintiff shall recover 'such damages as the jury may assess,' and in that sense, by the letter of the statute under which this suit is framed, the assessment of damages is left to the jury, but it is left to the jury under the control of the law, and under the control of the court, and an excessive verdict produced by appeals to passion, or to prejudice, or to sympathy would of necessity have to be set aside or reduced by the court. I do not say to you in this case that the amount of damages should be limited to the amount of wages or earnings that this lad might have made from the time of the accident to the time he reached his majority. I do not say to you that there is such a limit. The plaintiff can recover 'such damages as the jury may assess,' and you should have regard to all the facts and circumstances of the case which have been so well discussed by counsel, not being influenced by any appeal to passion, sympathy, or feeling. We sit here to decide the case, all of us, according to the proper rules of justice between the parties."

It follows that the judgment of the Circuit Court should be affirmed. And it is so ordered.

NEWMAN, District Judge (dissenting). I am unable to agree with the majority of the court in the conclusion reached in this case. In my judgment, the statutes of Alabama as construed by the Supreme Court of that state, allow only compensatory damages in cases of this character; that is, the loss to the parent of the minor's services during minority. Under the law of Alabama, as I understand it, when a minor child is employed without the knowledge or consent of the parent in a dangerous service, and is injured in such service, and dies from the injuries, the father, and the mother in certain contingencies, may sue and recover against the employer; the measure of damages being the value of the child's services during minority; that is, the parent's pecuniary loss. In such cases the contributory negligence of the deceased is not a defense. In another class of cases, when a minor child is killed in the service of another, the right of action which he

Digitized by Google

would have had if he had been injured and had not died in case of death survives to the personal representative or to the father, or, under certain circumstances, to the mother, and in these cases the defense of contributory negligence may be interposed.

The plaintiff, the father in this case, elected the former cause of action. The pleas of contributory negligence filed by the defendant company were stricken because it was this character of action, and the case was tried on that theory, as the whole record, including the instructions by the court to the jury, shows. There was no evidence in the case as to the value of the services of the deceased. His age was proven, which of course would give the length of time that would elapse until he attained his majority, but this was all. The court instructed the jury that the plaintiff, the father, was entitled to recover such damages "as the jury might assess." The court was careful to tell the jury while stating that the suit provided for such damages as they might assess, that the amount they should find ought to be found as their "calm and deliberate judgment," and under the control of the law, and that they should not be moved to find an undue amount by prejudice or sympathy. All this, however, simply left the jury to find such amount as in their judgment might be fair and reasonable for the killing of the father's minor child. I think the jury should have been restricted to the value of the child's service to the parent during minority. As to what this would have been, as has been stated, there was no evidence.

In my judgment this question is settled by the construction placed by the Supreme Court of Alabama on the Alabama statutes. The most important case on that subject is the case of Williams v. Railroad Co., 91 Ala. 635, 9 South. 77. A brief extract from the conclusion of the opinion in that case will show what was determined as to the question here involved:

"The first and last counts of the complaint aver that decedent was a minor son of plaintiff; that he was wrongfully employed by the defendant to perform the duties of a brakeman without the knowledge and consent of the plaintiff, and while attempting to obey the orders of his superior, in the performance of his duties as brakeman, was injured and killed by the wrong and negligence of the defendant's agents and servants. These two counts show a good cause of action, and there was evidence tending to sustain the averments of these two counts. It was error to give the general charge for the defendant. The damages recoverable by the father are compensatory and not punitive." Citing Railroad Co. v. Orr, 91 Ala. 548, 8 South. 363, and cases there cited.

The rule announced in this case, so far as my examination shows, has never been changed by the Supreme Court of Alabama. On the contrary, in the last case on this subject to which attention has been called, or which I have been able to find (Railway Co. v. Hill, 146 Ala. 240, 40 South. 612), the same view of the measure of damages is announced, as will be seen by an extract from the opinion, in the following language:

"The gravamen of the eighth count is 'the alleged wrong of the defendant in putting the plaintiff's minor son to work at a dangerous place upon a dangerous work without her consent.' Marbury Lumber Co. v. Westbrook, 121 Ala. 179, 25 South. 914. The count avers that in consequence of such wrong her son was killed, and plaintiff (thereby) lost his services during his

Digitized by Google

minority, and plaintiff was damaged by reason of said injury. This damage was the deprivation of his service and wages until he attained his majority; the father being dead, and the son not having been emancipated."

But these statutes of Alabama have been construed by this court. In McGehee v. McCarley, 91 Fed. 462–465, 33 C. C. A. 629, in the opinion of the court, this language is used:

"But the majority of this court finds material error in this cause resulting from the failure of the trial court to charge the jury, as the defendants below requested, that only compensatory, and not punitive, damages were recoverable in the case. It is plain to us that under the doctrine of Railway Co. v. Prentice, 147 U. S. 101, 13 Sup. Ct. 261, 37 L. Ed. 97, no punitive damages could be recovered in this case. It is not claimed that the corporation ever authorized or ratified the alleged negligence or assault. While the corporation may be compelled to make compensation for the tortious act of its servant committed in the scope of his employment, even if the act be willful and wanton, yet, if the corporation be itself innocent, it cannot be punished by the infliction of vindictive damages. See Circuit Court of Appeals, Seventh Circuit, in Railway Co. v. Russ, 6 C. C. A. 597, 57 Fed. 822. We find nothing in the statute of Alabama which would require a departure from the doctrine announced in Railway Co. v. Prentice, supra. On the contrary, we find that the Supreme Court of Alabama, in construing the very statute under which this action was brought (Code Ala. 1886, § 2588), said that the damages recoverable under that statute are compensatory and not punitive. Williams v. Railroad Co., 91 Ala. 635, 9 South. 77. We are clear that the judgment must be reversed because of the error above stated."

There was a rehearing in this case and the judgment of the court was changed, and instead of being reversed it was affirmed, but upon the ground it seems that the suit was found to have been brought under section 27 of the Code of Alabama of 1896, and not under section 26, as was assumed when it was first decided. To this last decision Judge Pardee filed a dissenting opinion. McGehee v. McCarley, 103 Fed. 55, 44 C. C. A. 252.

The case now before the court, it is conceded, is proceeding under section 26. Judge McCORMICK, however, evidently entertained and acted upon the same view in both decisions in the case of McGehee v. McCarley which he has expressed in this case.

I think the distinction I have drawn, which seems to me to be supported by the statutes and decisions in Alabama, is right, and is founded not only in reason, but in justice. If the parent elects to sue in right of the survivorship of the minor child's cause of action, and brings a suit against which any contributory negligence of the deceased may be set up as a defense (if the child has attained such age as that contributory negligence can be pleaded), then the parent would be entitled to, and ought to recover, if liability is shown, a substantial verdict, how to be measured under the law of Alabama it is unnecessary to say, but certainly going beyond any mere value of minority service. If, however, the parent wishes to avoid any defense which the employer might properly set up against the deceased, and chooses to sue in his or her own right as parent, for the child's death, it seems to me that the recovery in justice should be restricted to the parent's pecuniary loss; that is, the value of the child's services during minority. In my judgment this is not only fair and right, but it is the law of Alabama deducible from its statutes and decisions. Certainly a statute undertaking to give any greater right should do so clearly and distinctly.

Digitized by Google

I think the decision of the Circuit Court should be reversed, and the case remanded and a new trial had, in which the law of damage could be stated to the jury in accordance with what has been herein said.

On Petition of Plaintiff in Error for Rehearing.

PER CURIAM. The judges who concurred in the decision of this case are satisfied with the views expressed in the opinion of the court, and see no reason in the petition for rehearing sufficient to induce them to grant the same; and the application therefor is denied.

NOTE.—The following is the charge to the jury:

SHELBY, Circuit Judge (charging the jury orally). At common law in England and in this country no action lies for the death of a human being. The idea was that the injury was merged in the felony, and under that system, although a man could bring a suit in the event he was personally injured and not killed, if it killed him no one at all could sue. But a long time ago an act was passed in England, called "Lord Campbell's Act," which authorized a suit to be brought in the event of death from the wrongful or negligent act of another, and that act has been substantially adopted in all or nearly all the states of the Union, so that the law now is by statute that, wherever death is produced by the wrongful or negligent act of another, an action accrues to some one. We have in Alabama statutes of that kind. We have acts which permit a suit to be brought by the administrator of a person who is negligently or wrongfully killed, and then we have a law, which is section 26 of the present Code of Alabama (Code 1896), which provides that the father, if living, or the mother, if the father is dead, may bring an action for the wrongful or negligent killing of a minor child who is a member of the father's family. It is under that section of the Code that this suit is brought.

The plaintiff alleges that his son, who was a minor, was killed by the wrongful act or the negligent act of the defendant's agents or servants. The wrongful and negligent acts charged are described in the declaration and have been detailed in the evidence. The plaintiff also alleges, as it was necessary for him to allege under the section of the Code under which this action is brought, that his son who was killed was a member of his family. The defendant files a plea of not guilty, which is in effect a denial of all of the wrongs alleged in the complaint. It also pleads specially that the son who was killed was not a member of the plaintiff's family at the time he was killed. Now, the issues joined upon these pleas involve the questions which are submitted to the jury. The burden of proof in the first instance, is upon the plaintiff; that is, the plaintiff must prove in this case the allegations of his complaint. If proved by a preponderance of the evidence and to the satisfaction of the jury, the plaintiff then becomes entitled to a verdict. On the failure of such proof by the plaintiff, the defendant is entitled to a verdict. In this case, as in every case, or in nearly every case, that is litigated and tried, there are many facts which are practically conceded, and but few points that are earnestly contested. Now, there is no controversy here about the proposition that the plaintiff in this case is the father of the young man who was killed. There is no controversy about his employment, and about the fact that he was killed. There is no controversy about the fact that he was killed while in the employment of the defendant. The chief controversy in the case is over the question as to whether or not at the time he was killed he was a member of the plaintiff's family. That he was his son there is no dispute; but the question is submitted to the jury, as a question of fact in this case, whether or not he was a member of the plaintiff's family at the time of the accident. At the beginning of the evidence on this question this young man was residing at the house of his father, and at that time there could be no question about the fact that he would then be a member of the family within the statute. The defendant contends that subsequent occurrences before the killing amounted to an emancipation of the lad, and caused him to cease to be a member of the family of his father. It is argued before

Digitized by Google

you on that line that the father no longer had any interest in him, did not seek to collect his wages, did not make any inquiry as to where he was, and that there was a long absence not accounted for in any way from the paternal roof. The plaintiff, on the other hand, says that the evidence shows that there was some controversy or dispute between the lad and his parents in reference to his attention to a young woman who lived near by, and that that controversy led to the lad's going temporarily away from home, and his father consented to his absence for fear that his return might lead to a marriage between the boy and the young woman. It is contended on the part of the defendant that the absence was intended, so far as the proof shows, to be permanent, and that the boy was no longer a part of the family, and that the family relations were permanently and forever severed. The plaintiff says that the absence was merely temporary, that it was mere prudence and care on the part of his parents to permit him to stay away without any inquiry for some time, and that the disruption of the family relation was not of the character to cause him to cease to be a member of the family. If there was an abandonment of the relation of parent and child, intended to be permanent, or intended to be absolute for the time, though limited, the jury might be justified in concluding that the lad was not at the time a member of the family; but if the absence was only temporary, and was permitted by the father, and not a case of permanent estrangement, but simply in view of the father's idea as to what effect might be produced by the son's presence near the girl whom he did not wish him to marry, if the absence was only of that kind, and permitted for that reason, the jury, I think, would not be justified in holding that he ceased to be a member of the family. That question is left for the jury to determine, whether in the light of the facts he remained a member of the family. You should look at it in the light of your experience, at every fact from the time of the controversy, about his attentions to the girl until the lad was returned home a corpse. If in your view, in the light of this evidence and the inferences you draw legitimately from it, the lad remained a member of the family, then that defense fails; but if you find from the evidence, or draw the inference, that the family relations were severed, and that under the circumstances he was no longer a member of the family, the defense would be good, because it is incumbent on the plaintiff to show that this lad was a member of the plaintiff's family at the time the accident occurred. You will bring your common knowledge and experience to bear upon questions of that kind, and I submit this one to the jury, believing that they are better able to deal with it than lawyers at the bar or the judge on the bench.

I think that I might say to you that a temporary absence with the intention of returning to the family roof would not prevent the lad from remaining a member of his father's family. I think I might say to you that the father might permit, without dissolving the family relation, an absence of this kind, if he did not intend the permanent estrangement and dislodgement from the home, and the lad yet remain a member of the family. It is a question of intention upon the part of the parent and upon the part of the child, to be deduced from the actions and circumstances that surround the case.

One of the averments in several of the counts of the declaration is that the lad came to his death by the wrongful and negligent act of the defendant. Proof is offered on the part of the plaintiff tending to show that there was a defect in a step which was used in getting on the engine. Proof is offered on the part of the defendant to show that the defect was not of such a character as would be negligence on the part of the defendant. You will remember the conflict upon this subject. I will not go into details, because they would enlarge the charge too much. It is the duty of the employer to provide a safe place for his employé to work, and to keep sound implements of labor, or to exercise, I will say, at least ordinary care in keeping the implements and machinery which his employé is to use in a reasonably safe condition. If the jury find from the evidence that the step which was used to get up or down from the engine was so defective as to make its use dangerous, they would be justified in inferring negligence on the part of the defendant from that defect. This and other averments of negligence and wrong that appear in the complaint must be proved, for the burden of proof is upon the plaintiff, and the jury, in considering each of them, will consider

Digitized by Google

all the evidence in ascertaining whether or not due proof is made. If you find, under the instructions which I have given you, that proof is made of the averments of the declaration, or of any count of the declaration, to your satisfaction, including the averment that the lad was a member of the father's family, then it would be your duty to find a verdict in favor of the plaintiff, and the question would then arise as to the mode or rule by which you would estimate the damages to which the plaintiff may be entitled.

There are always in cases of this kind two extreme views submitted to the jury by the parties. It is fortunate that neither the plaintiff nor the defendant is allowed to establish the rule of damages, because either is inclined to go to an extreme. Invariably the plaintiff's tendency is to exaggerate the amount, and to claim the utmost sum, and the defendant's tendency is to make it as small as possible. Now, the plaintiff, gentlemen, can claim what he pleases in his declaration. That is no criterion to go by. He might sue for a million dollars as well as one, and whatever he sues for is usually argued for. I think I should say on that question, if you get to it, that you should exercise a calm and deliberate judgment, not be influenced by any appeals to sympathy, remarks about poverty, nor any remarks about the defendant being a corporation. Whatever sympathy we have, we are not justified in exercising it at the improper expense of others. The section of the Code under which the plaintiff has brought this suit says that the plaintiff shall recover "such damages as the jury may assess," and in that sense, by the letter of the statute under which this suit is framed, the assessment of damages is left to the jury; but it is left to the jury under the control of the law, and under the control of the court, and an excessive verdict, produced by appeals to passion, or to prejudice, or to sympathy, would of necessity have to be set aside or reduced by the court. I do not say to you, in this case, that the amount of damages should be limited to the amount of wages or earnings that this lad might have made from the time of the accident to the time he reached his majority. I do not say to you that there is such a limit. The plaintiff can recover "such damages as the jury may assess," and you should have regard to all the facts and circumstances of the case which have been so well discussed by counsel, not being influenced by any appeal to passion, sympathy, or feeling. We sit here to decide the case, all of us, according to the proper rules of justice between the parties. If, under the instructions I have given you, you conclude the plaintiff is entitled to recover the form of your verdict will be: "We, the jury, find for the plaintiff, and assess his damages at $———," filling up the blank.

If you come to the conclusion that the plaintiff is not entitled to a verdict, but the defendant is, then the form of your verdict would be: "We, the jury, find for the defendant."

That is all, I believe, that I desire to say to you.

The following is section 26, Code Ala. 1896, being section 2485, Civ. Code Ala. 1907, with the note of Code Commissioner Mayfield appended thereto:

"2485. (26) (2588) (2899). Suits for Injuries Causing Death of Minor Child.—When the death of a minor child is caused by the wrongful act, or omission, or negligence of any person or persons, or corporation, his or their servants or agents, the father, or the mother, in cases mentioned in the preceding section; or if the father and mother are both dead, or if they decline to bring the action or fail to do so within six months from the death of the minor, the personal representative of such minor may sue, and in any case shall recover such damages as the jury may assess; but a suit by any one of them for the wrongful death of the minor shall be a bar to another action, either under this section or under the succeeding section."

"Note.—Genesis of Statute. This section first appeared as act approved February 28, 1872 (Acts 1871–72, p. 82), which was codified in the Code of 1876, and appears as section 2899, and a similar statute was enacted January 23, 1885 (Acts 1884–85, p. 99). The act as originally passed was never construed by the Supreme Court. It was very greatly modified, when codified as it appeared in section 2588 of the Code of 1886, and was brought forward as section 26 of the Code of 1896. It was evidently the intention of the Legislature to give the parents, the father and mother, respectively, in the

Digitized by Google

cases mentioned, a right of action for the wrongful death of their infant in the same manner as the right of action was conferred upon the personal representative under the homicide act, section 27 of the Code of 1896, but to make the action by the parent a bar to an action under the homicide act, so as not to allow an action by both the parent and personal representative for the same wrongful act causing death of infant. There was evidently some confusion or lack of clearness as to the relation of this section to the one following. An action by the parent for the wrongful death of the infant would certainly be a bar to an action by the personal representative under section 26. Would it also be a bar to an action by the personal representative under section 27, or was the effect of the statute of January 23, 1885, or the act as codified (section 26 of the Code of 1896), to take away the right of action under section 27 of the Code of 1896 for the wrongful death of infant? There was also some confusion in the decisions of the court construing these two sections. Each statute provides that the damages recoverable shall be such 'as the jury may assess.' The cases, construing section 27 hold that the damages are punitive, while the case of Williams v. S. & N. R. R. Co., 91 Ala. 635, 9 South. 77, construes section 26, holding that the damages are compensatory and not punitive. This would imply that each statute created a different cause of action, and therefore that two actions might be maintained for the sane wrongful death—one under section 26, by the parent or personal representative, and the other under section 27, by the personal representative. There is further confusion for this reason: That section 27 provides that the damages, when recovered, are not subject to the payment of debts of the testator or intestate, but must be distributed according to the statute of distribution, whereas section 26 has no similar provision. In fact, it has no provision as to the status or disposition of the damages when recovered; that is to say, if an action should be brought by the personal representative under section 26, would the damages be distributed between the distributees of the decedent's estate, or would they be for the benefit of the parent exclusively? Another cause for confusion in the statute itself is that it provides that an action by the parent is a bar to a suit by the personal representative, but it does not provide that a suit by the personal representative is a bar to one by the parent; e. g., if the personal representative should bring an action under section 26 of the Code, and recover judgment, would it bar an action by the parent under section 27? The section as now written was intended to make its meaning certain, and not to change it. Amendment of complaint changing cause of action from section 25 or section 26 to section 27. 141 Ala. 325, 37 South. 431. Damages under section 27 held punitive, while those under section 26 held compensatory. Damages under this section should be the same; the language of each as to damages being the same. In action by parent, contributory negligence of the parent may be defense as to simple negligence. A. G. S. R. R. Co. v. Burgess, 116 Ala. 509, 22 South. 913. Damages recoverable under this section held to be pecuniary compensation to parent. Id. Policy of statute. Williams v. S. & N. R. Co., 91 Ala. 635. 9 South. 77; Winslow v. State, 92 Ala. 78, 9 South. 728. Recovery solely for benefit of parents. Tenn. C. I. & R. Co. v. Herndon, 100 Ala. 451, 14 South. 287. Parent can only recover where minor could have recovered at common law, had he survived. Lovell v. De Bardelaben C. & I. Co., 90 Ala. 13, 7 South. 756; Williams v. S. & N. R. Co., 91 Ala. 635. 9 South. 77; Harris v. McNamara, 97 Ala. 181, 12 South. 103. Contributory negligence—effort to avoid injury—when questions for jury. A. G. S. R. Co. v. Dobbs, 101 Ala. 219. 12 South. 770; Williams v. S. & N. R. Co., 91 Ala. 635, 9 South. 77. (See, also, citations to next section.) Damages under this section compensatory and not punitive. Williams v. S. & N. R. Co., 91 Ala. 635. 9 South. 77. (This decision, if not dictum, is wrong and should be corrected.) See Mayfield's Digest, vol. 2, pp. 1029, 1044; vol. 3, p. 978; vol. 5, p. 504."

Digitized by Google

(160 Fed. 866.)

PAULY JAIL BLDG. & MFG. CO. et al. v. JEFFERSON COUNTY.

(Circuit Court of Appeals, Ninth Circuit. February 3, 1908.)

No. 1,473.

1. COUNTIES—ACTIONS—PLEADING—ISSUES—MATTERS TO BE PROVED.

Where, in an action on county warrants given for the construction of certain jail cells and not paid for want of funds, the complaints alleged that the warrants were payable out of a fund raised from the sale of bonds, and that though the money raised from the bonds was authorized to be used for other purposes than for the payment of the courthouse and jail, none of it had been paid out in refunding prior indebtedness, the county having denied its possession of any of the money, it would be presumed that it was paid out for other proper purposes, and hence defendant's admission that it had received the money did not shift the burden of proof to defendant to show what disposition had been made thereof.

2. PLEADING—FORM OF DENIAL—CONSTRUCTION.

A general denial followed by a specific denial of the same fact is improper, and, when pleaded, the general denial may be disregarded, or one of the denials stricken on motion, or defendant may be required to elect on which he will stand.

3. SAME—INCONSISTENT ALLEGATIONS.

In an action on county warrants, payable out of the proceeds of county bonds, a specific denial that defendant had on hand the sum mentioned in the complaint from the proceeds of the sale of the bonds was not inconsistent with a general denial of the allegation that it had not applied any part of such amount to the payment of prior indebtedness of the county.

4. COUNTIES—WARRANTS—SPECIAL FUNDS.

Where county warrants drawn for the construction of jail cells directed the treasurer to pay the payee the sum specified out of county funds not otherwise appropriated, the fact that the warrants also contained the words "for jail cells" did not make them payable from a special fund.

5. SAME—ASSENT OF PAYEE.

Where county warrants for jail cells payable out of funds of the county not otherwise appropriated were accepted by the payee with full knowledge of their terms and of the fact that there were no funds to pay them, the payee would be held to have assented, and agreed to look to the general funds of the county for payment.

6. SAME—"COUNTY WARRANT"—DEFINITION.

A "county warrant," under the statute of Washington, is a promise by the county to pay it when money applicable thereto comes into the treasury, its maturity by analogy to a note being the time when the county treasurer gives notice of his readiness to pay it and stop the running of interest.

[Ed. Note.—For other definitions, see Words and Phrases, vol. 2, p. 1668.]

7. SAME—RIGHT OF ACTION—CONDITION PRECEDENT—DEMAND AND REFUSAL.

Where county warrants payable out of funds not otherwise appropriated were presented for payment, and stamped "not paid for want of funds," and there had been no refusal to pay out of a fund available therefor, the holders were not entitled to judgment against the county, the claim being liquidated, and the holders being entitled to resort to mandamus to compel payment out of funds applicable thereto.

[Ed. Note.—For cases in point, see Cent. Dig. vol. 13, Counties, § 256.]

In Error to the Circuit Court of the United States for the Northern Division of the Western District of Washington.

Digitized by Google

On September 19, 1890, a special election was held by the voters of Jefferson county, state of Washington, whereby it was decided that county bonds in the sum of $225,000 should be issued to provide money to fund the outstanding warrant indebtedness of the county, and to build a courthouse and jail. Between June 23 and December 20, 1891, the county issued and sold the bonds so authorized for the sum of $232,341.29. On December 2, 1890, The Pauly Jail Building & Manufacturing Company, one of the plaintiffs in error, entered into a contract with Jefferson county, the defendant in error, by which the former was to construct certain steel cells in the basement of the county courthouse, then in the course of construction, for the sum of $17,278, payable 10 days after the completion of the work and the acceptance of the same by the board of county commissioners. The contract was performed by the company, and on May 4, 1892, the defendant in error issued to said company its warrants for $17,278. On the same day all of the warrants were presented to the county treasurer of the defendant in error for payment, and that officer indorsed thereon: "Not paid for want of funds." On November 17, 1905, said warrants were again presented for payment, and were not paid for want of funds. Certain of the bonds were transferred to John H. Rausch. The plaintiffs in error brought actions against the defendant in error to recover judgment on said warrants, and the causes were consolidated in the court below and tried as one action. The cases were tried upon the second amended complaints, in which the foregoing facts were set forth, and in addition thereto it was alleged that, under the law of the state of Washington authorizing the issuance of county bonds, it is provided that the money arising from the sale thereof shall be used only for the purpose for which the bonds are issued, and that of the money received by the defendant in error for the sale of said bonds but $110,873.40 was expended in the construction of the courthouse, "leaving of the proceeds of the said bonds unexpended the sum of $121,467.89," and it was alleged "that the defendant county never applied any of the money derived from the sale of said bonds to the payment of the county indebtedness existing when the aforesaid special election was called, nor has it expended or paid out any of the money derived from the sale of said bonds for the purpose for which said bonds were issued, excepting the sum of $110,873.40 as set out in the eighth paragraph of this complaint, and that the defendant has now in its possession the sum of $121,467.89 of the money derived from the sale of said bonds." "That the defendant county has never called any of said warrants for payment, but that it has always refused to pay the same on the alleged grounds that it has no funds to pay the same or any part thereof."

The answers contained, among other matters, the following: "That the said courthouse cost the said defendant, including extras and plans and specifications, the sum of $142,462.30, and said defendant specially denies that it has now on hand the sum of $121,467.89 of the proceeds of the sale of said bonds, and further denies that it has said sum or any sum whatever on hand derived from the sale of said bonds." Replies were filed denying all new matter alleged in the answers. A jury trial was waived, and the cause was tried before the court. No evidence was offered to sustain the allegation that the defendant in error had on hand the sum of $121,467.89 or any sum of the proceeds of the sales of the bonds, and the court among other findings found that at the times of the presentation of said warrants to the county treasurer on May 4, 1892, and November 17, 1905, and at the commencement of the action and at all times since, the treasurer of said county did not have in his custody or control any of the money derived from the sale of said bonds, and that none of said warrants have ever been called for payment. The court entered a judgment of nonsuit, "for the reason that plaintiff's evidence fails to show that there is in the possession or under the control of the said defendant any money or moneys derived from the sale of said bonds, or any money in the fund upon which the warrants in said suit are drawn to pay said warrants or any of them."

John P. Judson, for plaintiffs in error.

U. D. Gnagey, for defendant in error.

Before GILBERT, ROSS, and MORROW, Circuit Judges.

Digitized by Google

GILBERT, Circuit Judge (after stating the facts as above). It is contended that the trial court erred in granting the nonsuit, for the reason that the money derived from the sale of the county bonds was a trust fund to which the plaintiffs in error had the right to look for the payment of their warrants, and which could be used only for the purpose for which the bonds were issued, and that the admission of the defendant in error that it received the money shifted the burden of proof as to the disposition made of the same, and bound the defendant in error to account therefor. We do not understand that by the pleadings the burden of proof was ever shifted. The money raised upon the bonds was authorized to be used for other purposes than for the payment for the courthouse and the jail. It was authorized to be used also in payment of outstanding warrants against the county. The defendant in error, having denied its possession of any of the money, the presumption would arise that it paid out the whole thereof for the purposes for which the bonds were authorized to be issued. The complaints, it is true, alleged that none of the money was paid out in refunding prior indebtedness, but the answers denied those averments, and no proof to the contrary was offered on the trial. The plaintiffs in error question the sufficiency of the denials on the ground that there is in each answer a general denial of the allegation combined with a specific denial that the defendant in error now has on hand the sum of $121,467.89. It is true that such a combination of denials is improper, and that, if an answer contain a general denial and a specific denial of the same fact, the general denial may be disregarded (Philip Schneider Brewing Co. v. American Ice Mach. Co., 77 Fed. 138, 23 C. C. A. 89) or one of the denials may be struck out on motion (Dennison v. Dennison, 9 How. Prac. [N. Y.] 246) or the defendant may be required to elect upon which he will stand (School District v. Holmes, 16 Neb. 486, 20 N. W. 721). But here the specific denial that the defendant in error has on hand the sum mentioned is not at all inconsistent with the general denial of the allegation that it had not applied any thereof to the payment of the prior indebtedness of the county. The theory of Code pleading is that there shall be brought to the attention of the court the real controversy, and that the parties shall be required to show in their pleadings wherein they agree and wherein they disagree. This was sufficiently done in the present case, and the plaintiffs in error, after going to trial on issues as made, cannot now raise the objection that no denial was made to the allegation that no part of the money raised upon the bonds was applied to the former indebtedness of the county.

But there is other ground on which the judgment is sustainable. It is to be observed that the warrants were not drawn on the special fund realized upon the sale of the bonds. The form of the warrants was as follows:

"State of Washington.

"The treasurer of the county of Jefferson will pay to the Pauly Jail Bldg. & Mnfg. Co., or order, the sum of one thousand dollars, out of the county funds not otherwise appropriated. Witness my hand and official seal this 4th day of May, 1892, for jail cells. James Seavey, Auditor of Jefferson County, Wash., By Newton W. O'Rear, Dep."

Digitized by Google

The words "for jail cells" do not make the instruments special fund warrants. Those words are appended evidently for the purpose of specifying the debt for the payment of which the warrants were drawn. They do not control the clearly expressed provision that the warrants are payable out of county funds not otherwise appropriated, and Jones v. Portland, 35 Or. 512, 58 Pac. 657, cited by the plaintiffs in error, is not an authority to the contrary. The warrant in that case was not made payable out of county funds not otherwise appropriated. The decision of the court was that it was payable out of a special fund, because it contained the recital that it was issued to pay for material furnished for a specific improvement, and because there was no claim that the city intended to pay for such improvement out of any fund except the one to be raised by assessment upon the abutting property. In addition to the expressed terms of the warrants in the present case, the time when, and the circumstances under which, they were issued all tend to indicate that they were not warrants upon a special fund. The money upon the bonds was obtained by the county prior to December 30, 1891. On May 4, 1892, the warrants were issued, and on that date were presented to the treasurer of the county, and indorsed by him: "Not paid for want of funds." Under those circumstances they were accepted by the Pauly Jail Bldg. & Mfg. Co., and having been so accepted, with full knowledge of their expressed terms and of the fact that there were no funds to pay them, the payee must be held to have assented and agreed to look to the general funds of the county for their payment.

The plaintiffs in error cite and rely upon Potter v. New Whatcom, 20 Wash. 589, 56 Pac. 394, 72 Am. St. Rep. 135, and New Orleans v. Warner, 175 U. S. 120, 20 Sup. Ct. 44, 44 L. Ed. 96. In the first of these cases, the warrant had been drawn on a special street improvement fund. A portion of the fund had been collected by the city treasurer and converted to his own use. The court held that the money paid in on the special assessment was a trust fund which the city was under obligation to preserve, and that it was liable therefore for the payment of the warrant. The object of the suit was to convert the special warrant into a general liability, the city denying all liability. The decision has no bearing upon the present case, for the reason that here the warrants sued on were not drawn against a special fund, and the city had acknowledged its general liability, and had issued its warrants for the same. Nor does the decision in New Orleans v. Warner add any light to the questions here involved. In that case the warrant sued upon was given for the purchase of a drainage plant, for which the city had promised to pay out of a fund to be created by drainage assessments. The court held that the city could not abandon its duty to create that fund and take steps to prevent the further collection of such assessments, and plead in defense to the warrants that it had, prior to the purchase of the drainage plant, paid off obligations theretofore created against the fund. It was the decree of the court that an account be taken of the drainage assessment and that there be a pro rata decree against the city if such fund were not sufficient to pay all the warrant holders in full. But it is urged that the plaintiffs in error were entitled to a judgment against the defendant

Digitized by Google

in error to the end that thereafter mandamus might issue to compel the payment thereof. But this argument ignores the nature of the liability of the defendant upon its warrants under the laws of the state of Washington. In Cloud v. Town of Sumas, 9 Wash. 399, 37 Pac. 305, the court said:

"If this action can be maintained upon the warrants which have been issued, then a like suit might be maintained upon the warrants issued in satisfaction of this judgment, and so on without limit. Clearly the law contemplates no such proceedings. The plaintiff already has the town's evidences of indebtedness, issued to him in regular form, and, if the treasurer should refuse to pay them in their regular order, he can resort to a mandamus to compel such payment."

But there has been no refusal to pay the warrants involved in the present suit, nor is any such refusal alleged in the complaints. There can be no refusal until there is a fund available, and the complaints alleged and the trial court found, that since the issuance of the warrants, there has been no fund out of which they could have been paid, and that they have not been paid, only for want of funds. In Savings Bank & Trust Co. v. Gelbach, 8 Wash. 497, 36 Pac. 467, it was held that under the statutes of Washington governing the presentation and allowance of claims against counties, and the issuance of warrants for the sums allowed, it was contemplated that the transaction between the claimant and the county was to be merged in the warrant and settled by it "just as fully as is a store account between a merchant and his customer, when the latter gives his note for the balance found due upon the former's books." Said the court:

"A warrant, under our statutes, is a promise to pay it, in its order of issue, when money applicable to it comes into the treasury, and its maturity, by analogy to a note, is the time when the treasurer gives notice of his readiness to pay it, and stops the interest. Respondent says that if a warrant is considered as a contract, it is one which becomes due instantly upon presentation and therefore the interest upon it, like that upon a past due note, is only allowed as damages. But there is this difference, a note can be sued upon, judgment taken, execution issued, and property levied upon and sold, and the debt paid, but no action lies either upon a warrant or the original debt."

In the light of these authorities, we see no escape from the conclusion that the defendant in error was entitled to a nonsuit. The judgment is affirmed.

(160 Fed. 870.)

SHANNON v. UNITED STATES.

(Circuit Court of Appeals, Ninth Circuit. February 3, 1908.)

No. 1,489.

1. WOODS AND FORESTS—RESERVATIONS—GRAZING RIGHTS.

Where defendant drove large bands of cattle into a 320-acre pasture which was inclosed on three sides, but open on the side toward a public forest reserve, knowing that there was no water in the pasture, and that it was insufficient to sustain the cattle, and that they must, of necessity, drift onto the reserve for pasture and water, defendant could not claim freedom from responsibility for the cattle trespassing on the reserve because he at no time drove them there, and because the reserve was not inclosed.

Digitized by Google

2. SAME—IMPLIED LICENSE OF PASTURE.

The creation of a forest reserve severs the reserved land from the public domain, and appropriates it to public use so that it is no longer subject to the implied license to pasture on public lands.

3. SAME—USE—RULES—REASONABLENESS.

The rules promulgated by the Secretary of the Interior regulating the number of cattle and other live stock that may be pastured on a forest reserve, and the manner in which the owners may obtain permission to use the reservation for that purpose, are reasonable and within the power granted by Act Cong. June 4, 1897, c. 2, 30 Stat. 34 (U. S. Comp. St. 1901, p. 1542), giving the Secretary of the Interior power to make rules and regulations, and establish such service as will insure the objects of such reservations, namely, to regulate their occupancy and use, and to preserve the forests from destruction.

4. PUBLIC LANDS—CONGRESSIONAL POWER—STATE LEGISLATION.

The federal Constitution delegates to Congress the general power absolutely and without limitation to dispose of and make all needful rules and regulations concerning the public domain independent of the locality of the land, whether situated in a state or territory, the exercise of which power cannot be restricted in any degree by state legislation.

[Ed. Note.—For cases in point, see Cent. Dig. vol. 41, Public Lands, § 7.]

5. SAME—RELINQUISHMENT—CONGRESSIONAL POWER.

Congress had no power to relinquish any of its jurisdiction over the public domain by a compact with the state of Montana on admission of the state into the Union, nor had the state any power to reserve any such control.

[Ed. Note.—For cases in point, see Cent. Dig. vol. 41, Public Lands, §§ 5-7.]

6. SAME—STATE STATUTES—STOCK AND FENCE LAWS.

Public lands in the state of Montana were not subject to the stock and fence laws of the state which were applicable only to lands subject to the state's dominion.

[Ed. Note.—For cases in point, see Cent. Dig. vol. 41, Public Lands, §§ 5-7.]

7. PUBLIC LANDS—GOVERNMENTAL CONTROL—ACTIONS.

Where the United States brought suit to restrain the trespass of defendant's cattle on a forest reserve, the fact that in such suit it acted in its proprietory capacity, and was subject to the ordinary rules of pleading, practice, and laws applicable to the case, did not operate as a waiver of any of its sovereign rights to the land sought to be protected.

8. INJUNCTION—DEFENSES—BURDEN ON DEFENDANT.

It was no defense to an injunction restraining defendant's use of a United States forest reserve as a pasture that its issuance would impose a grievous burden on him to restrain the cattle in his adjoining close, it also appearing that he could relieve himself of such burden by restoring a fence on one side thereof.

[Ed. Note.—For cases in point, see Cent. Dig. vol. 27, Injunction, § 22.]

Appeal from the Circuit Court of the United States for the District of Montana.

For opinion below, see 151 Fed. 863.

The appellant was the defendant in a suit brought by the United States to enjoin him from driving, conducting, or causing or permitting to be driven or conducted, his live stock on the Little Belt Mountains Forest Reserve, and permitting the same to remain there. The bill alleged that during the month of December, 1904, and at divers times prior thereto, the appellant "wrongfully and unlawfully, and without right or authority, and without the consent and against the wishes of the complainant, the United States of America, and its officers and agents, and without having obtained a permit from the

Digitized by Google

Secretary of the Interior or the Commissioner of the General Land Office or any officer or agent of complainant, and in violation of law, and in utter disregard of the rules and regulations of the Secretary of the Interior, did drive and conduct, and cause to be driven and conducted, and permitted, suffered, and allowed to go onto and upon the said reserve, three hundred head of cattle," and the bill proceeded to allege that said acts would be continued unless enjoined, and would result in permanent and irreparable damage and injury to said reserve and be destructive of the objects for which the reserve was created. Upon the filing of the bill, a citation was issued requiring the appellant to show cause why an injunction pendente lite should not issue against him. On the hearing a temporary injunction was ordered as prayed for. From that order the present appeal is taken.

The Little Belt Mountains Forest Reserve was created by the proclamation of the President on August 16, 1902. The appellant is in the possession of a tract of 320 acres, which adjoins that part of the reserve known as Lone Tree Park, of which 320 acres he acquired 160 acres under the homestead law, and the remaining 160 acres he holds by a lease from one Peterson, the owner who acquired the same under the desert land act. The grazing privileges on the reserve are divided into districts. Lone Tree Park is in District No. 4. It contains about 1,000 acres. On September 3, 1902, shortly after the reserve had been established, the appellant obtained his lease of Peterson's 160 acres. As soon as he had obtained the lease, he turned from 3,000 to 3,500 head of sheep into the 320-acre tract, and later took them out and turned in cattle. When the appellant leased the land from Peterson, Peterson's land and his own were inclosed, but the appellant made openings in the Peterson fence on the side toward the reservation, for the purpose of letting stock through on the reserve. The evidence shows that the fence was down in 7 places, and that the gaps were from 30 to 90 feet wide. In some places the wires were weighted down with poles, in others with rocks. In other places the wires were raised, and placed on top of posts, so as to enable the stock to pass underneath. The evidence shows, moreover, that if the fence were maintained in good condition, stock could not obtain access to Lone Tree Park, because of the natural barriers which surround it. Every year since 1902, the appellant has thus grazed his cattle upon the reserve, without any permit, and has disregarded the rules governing the use of the reserve, and ignored the notices to keep his cattle off the reserve, given him by the forest ranger. The evidence shows that the appellant's tract of 320 acres would not furnish pasture to more than 50 head of cattle, and that there is no water on it, and that he would turn the cattle into the inclosure, and leave them there to drift over onto the reserve where there was pasture and water.

Ransom Cooper, for appellant.
Carl Rasch, U. S. Atty.

Before GILBERT, ROSS, and MORROW, Circuit Judges.

GILBERT, Circuit Judge (after stating the facts as above). The appellant denies that he has at any time driven his cattle upon the reserve, and asserts that if they went there, they did so of their own accord, the reserve not being inclosed by the United States, and that he is not accountable for the acts of the cattle in straying thereupon. We do not so regard the evidence, and we think the injunction issued by the court below may well be sustained on the ground that the evidence shows that the appellant drove his cattle upon the reserve. His home ranch was some 6 to 10 miles distant from the 320 acres inclosed near the reserve. He drove large bands of cattle within the 320 acres, which was inclosed on three sides, but open on the side toward the reserve, and left them there. Of course he knew that they would not and could not remain in the inclosure, for there was no

Digitized by Google

water there, nor sufficient pasture for so large a herd. They did as he evidently expected them to do. They went through the convenient openings which he had made in his fence for that purpose. In Lazarus v. Phelps, 152 U. S. 81–85, 14 Sup. Ct. 477, 478, 38 L. Ed. 363, the court said:

"So, if he lease a section of land, adjoining an uninclosed section of another, and stock his own section with a greater number of cattle than it could properly support, so that, in order to obtain the proper amount of grass, they would be forced to stray over upon the adjoining section, the duty to make compensation would be as plain as though the cattle had been driven there in the first instance. The ordinary rule that a man is bound to contemplate the natural and probable consequences of his own act would apply in such a case."

Counsel for the appellant seek support for their contention in the implied license to pasture on public lands, growing out of the custom by which such use has been permitted from the beginning of the government, and in the decision in Buford v. Houtz, 133 U. S. 320, 10 Sup. Ct. 305, 33 L. Ed. 618, in which the court recognized such license to use the public lands where they are left open and uninclosed, "and no act of the government forbids their use." But the lands included in a forest reservation are no longer public lands within the purport of that decision, and the act of the government does forbid their use. The creation of such a reservation severs the reserved land from the public domain, disposes of the same, and appropriates it to a public use. Wilcox v. McConnell, 13 Pet. 498, 10 L. Ed. 264. In pursuance of its policy of reserving for the public welfare, public lands on which is growing timber or undergrowth, for the preservation of the timber and the water supply, as provided in the act of March 3, 1891, c. 561, 26 Stat. 1103 (U. S. Comp. St. 1901, p. 1537), and, in order to make that act more effective, Congress passed the act of June 4, 1897, c. 2, 30 Stat. 34 (U. S. Comp. St. 1901, p. 1542), whereby it vested in the Secretary of the Interior the power to "make such rules and regulations and establish such service as will insure the objects of such reservations, namely, to regulate their occupancy and use, and to preserve the forests thereon from destruction." It was intended that this statute should be effective, and accomplish the results for which it was enacted. In pursuance of that authority, the Secretary of the Interior has promulgated rules regulating the number of cattle and other live stock that may pasture on the reservation, and the manner in which the owners thereof may obtain permission to use the reservation for that purpose. There can be no doubt that the rules are reasonable and are within the power so granted. In Dastervignes v. United States, 122 Fed. 30, 34, 58 C. C. A. 346, 350, this court said:

"Rule 13, promulgated by the Secretary of the Interior, is in accord with the provisions of the act of Congress, and in our opinion was a valid and legitimate exercise of the authority delegated to him to make such rules and regulations as would insure the objects of such reservations. The Secretary, in adopting this rule, acted simply as the arm that carries out the legislative will. He did not invade any of the functions of Congress. He did not make any law, but he exercised the authority given to him, and made rules to preserve the forests on the reserves from destruction. Such rules, within constitutional limits, have the force and effect of law, and it is the duty of courts

Digitized by Google

to protect and enforce them, in order to uphold the law as enacted by Congress."

But the appellant contends that he was not bound to maintain a fence between his land and the government reservation, nor to keep the fence that was there in repair, that he had the right to destroy or remove a fence which was his own property, and that it was for the appellee, if it desired to exclude live stock from the reservation, to inclose the same, or to take the necessary steps under the statutes of Montana to require adjacent proprietors to join in a division fence, and cites statutes of that state from which it appears that the Legislature has in substance declared that cattle may run at large in Montana, and that all owners who neglect to fence their lands against such stock shall be without remedy against the owners of animals which may trespass thereon, and argues that those laws are binding upon the United States as a landowner to the same extent that they are binding upon the owners of other lands situated within the state, and that the government, although in some positions and under certain defined conditions is a sovereign, it is, nevertheless, in the situation here presented, a mere private landowner, having the same rights, and no others, which are enjoyed by other landowners.

The federal Constitution delegates to Congress, absolutely and without limitations, the general power to dispose of and make all needful rules and regulations concerning the public domain, and this, independently of the locality of the public land, whether it be situated in a state or in a territory. Irvine v. Marshall, 20 How. 558, 15 L. Ed. 994; Jourdan v. Barrett, 4 How. 169, 11 L. Ed. 924; United States v. Gratiot, 14 Pet. 526, 538, 10 L. Ed. 573; Gibson v. Chouteau, 13 Wall. 99, 20 L. Ed. 534. The exercise of that power cannot be restricted or embarrassed in any degree by state legislation. This is the effect of the constitutional provision, unaided by the special provision usually incorporated in the compact by which the states are admitted into the Union. The provision in the Constitution of Montana, under which that state was admitted, declares "that the people of the proposed state of Montana do agree and declare that they forever disclaim all right and title to the unappropriated public lands lying within the boundaries thereof." The appellant contends that the portion of the ordinance just quoted is limited by the remainder thereof which follows:

"And to all lands lying within said limits owned or held by any Indian or Indian tribes, and until the title thereto shall have been extinguished by the United States, the same shall be and remain subject to the disposition of the United States, and said Indian lands shall remain under the absolute jurisdiction and control of the Congress of the United States."

It is argued that from this latter provision, expressly acknowledging that the Indian land shall remain under the absolute jurisdiction and control of Congress, it was not the intention that other lands should be subject to such jurisdiction and control. But it is wholly unnecessary to enter into a discussion of the construction of this provision of the Constitution of the state of Montana. Congress had not the power to relinquish any of its jurisdiction over the public domain by any compact with that state, nor had that state the power to reserve any such control.

Digitized by Google

It is true that in Pollard's Lessee v. Hagan et al., 3 How. 212–223, 11 L. Ed. 565, concerning the powers vested in the state of Alabama on her admission into the Union, the following language was used in the opinion of the majority of the court:

"Nothing remained to the United States according to the terms of the agreement, but the public lands. And if an express stipulation had been inserted in the agreement, granting the municipal right of sovereignty and eminent domain to the United States, such stipulation would have been void and inoperative; because the United States have no constitutional capacity to exercise municipal jurisdiction, sovereignty, or eminent domain within the limits of a state or elsewhere, except in the cases in which it is expressly granted."

But the doctrine so announced that the United States has no general power to take lands within the boundaries of a state by the exercise of the right of eminent domain was expressly denied in the subsequent decision in Kohl v. United States, 91 U. S. 367, 23 L. Ed. 449, and in Gibson v. Chouteau, 13 Wall. 92, 99, 20 L. Ed. 534, the court said:

"As legislation of a state can only apply to persons and things over which the state has jurisdiction, the United States are also necessarily excluded from the operation of such statutes. With respect to the public domain, the Constitution vests in Congress the power of disposition and of making all needful rules and regulations. That power is subject to no limitations. Congress has the absolute right to prescribe the times, the conditions and the mode of transferring this property or any part of it, and to designate the persons to whom the transfer shall be made. No state legislation can interfere with this right or embarrass its exercise."

In Camfield v. United States, 167 U. S. 519, 525, 17 Sup. Ct. 864, 867, 42 L. Ed. 260, the court said:

"The general government doubtless has a power over its own property, analagous to the police power of the several states, and the extent to which it may go in the exercise of such power, is measured by the exigencies of the particular case. * * * While we do not undertake to say that Congress has the unlimited power to legislate against nuisances with a state which it would have within a territory, we do not think the admission of a territory as a state deprives it of the power of legislating for the protection of the public lands, though it may thereby involve the exercise of what is ordinarily known as the police power, so long as such power is directed solely to its own protection. A different rule would place the public domain of the United States completely at the mercy of state legislation."

In the light of these decisions, it is clear that the state of Montana had no dominion over the public lands lying within its borders, and no power to enact legislation directly or indirectly affecting the same. It could not give to the people of that state the right to pasture cattle upon the public domain, or in any way to use the same. Its own laws in regard to fencing and pasturing cattle at large must be held to apply only to land subject to its own dominion. No one within the state can claim any right in the public land by virtue of such a statute. The United States have the unlimited right to control the occupation of the public lands, and no obligation to fence those lands, or to join with others in fencing them for the purpose of protecting its rights can be imposed on it by a state. The rights given by the state statutes to the subjects of the state extend only to the lands of the state. They end at the borders of the government lands. At that border the laws of the United States intervene, and it is within their province to forbid

Digitized by Google

trespass. Such laws being within the power of Congress, it is not necessary to discuss the question whether it is sovereign power or police power, or what may be its nature, for there is no power vested in the state which can embarrass or interfere with its exercise.

The appellant makes the further point that a court of equity cannot recognize any sovereign right or power in a suitor appearing at its bar, and that the United States, having voluntarily come into court in its proprietary capacity as a landowner, seeking a remedy, must ask and receive equity upon the same terms and conditions that any private person or corporation may. We may concede this to be true. When the United States consents to be sued in a civil court, or resorts thereto for the protection of government property, or redress for injury to the same, it becomes subject to the rules of pleading, practice, and law applicable to the case. But it does not and cannot waive any of its rights in the subject of the controversy, and those rights must be protected by the court. The government does not appear here in a sovereign capacity or otherwise than as other suitors in a court of equity. The question for adjudication is, what are its rights under the averments set forth in the bill, and has the Legislature of Montana the power to enact legislation which shall affect the public lands within the borders of that state, or interfere with the right of the government to protect those lands? In Cotton v. United States, 11 How. 229, 13 L. Ed. 675, the court said:

"Although, as a sovereign, the United States may not be sued, yet as a corporation or body politic, they may bring suits to enforce their contracts and protect their property in the state courts or in their own tribunals administering the same laws."

The appellant argues that the maintenance of the injunction will impose a grievous burden upon him. But that objection is answered in the Camfield Case, in which the court said:

"The inconvenience, or even damage, to the individual proprietor, does not authorize an act which is in its nature a purpresture of government lands."

And, besides, the appellant may relieve himself of the grievous burden by restoring the Peterson fence.

The order of the Circuit Court is affirmed.

(160 Fed. 876.)

THE ROBERT DOLLAR.

THE TIGER.

(Circuit Court of Appeals, Ninth Circuit. December 2, 1907.)

No. 1,413.

COLLISION—STEAM VESSELS CROSSING—CONTRIBUTORY FAULT.

A steamship navigating San Francisco Bay on a bright moonlight night after exchanging crossing signals of one whistle with a tug with a tow approaching her course ahead from her port side, being the privileged vessel under article 19 of the Inland Navigation Rules, Act June 7, 1897, c. 4, § 1, 30 Stat. 101 (U. S. Comp. St. 1901, p. 2883), was required by article 21 to keep her course and speed, and where she continued porting her helm, and although her master was watching the tug and knew that it did not port in compliance with the signal, and was uncertain as to its intended course, failed to slow down and signal such fact as required by

Digitized by Google

rule 3 of the pilot rules, she is chargeable with contributory fault for a collision with the tow, although the initial fault was that of the tug.

Appeal from the District Court of the United States for the Northern District of California.

Page, McCutchen & Knight, for appellants.

F. R. Wall and Walter H. Robinson, for appellees.

Before GILBERT and ROSS, Circuit Judges, and HUNT, District Judge.

ROSS, Circuit Judge. We think this a plain case. The collision which was the subject of the action occurred between the steamer Robert Dollar and a laden barge at the time in tow of the tug Tiger, on the Bay of San Francisco, between 12 and 1 o'clock of a perfectly bright night—the moon being nearly full. There was a strong ebb tide flowing at the time. The tug was confessedly at fault in more than one particular—first, in not having a lookout; second, in not having any light on the barge; third, in not porting her helm and going to starboard in accordance with the single blast that she gave. The real question in the case is whether the Robert Dollar was also at fault as was held by the court below.

It appears that the steamer left her berth on the northerly side of Steuart Street Wharf at 12:45 a. m. with a cargo for a northern port, and, after turning, headed out into the bay with helm amidships, and moving under a slow bell. About the same time that the Robert Dollar started, the steamer Harold Dollar left her berth on the southerly side of the same wharf, and proceeded out into the bay on the starboard side of the Robert Dollar. The captain of the latter was on the open bridge of that vessel, with the first officer and two men on the forecastle head. "The first officer," said the captain in his testimony, "had instructions from me to keep a good lookout. The two men were up there with him ready to lower the yard down when we got clear of the docks, as we do, but not before we get clear of the docks." The men started to lower the yard under the instruction of the first officer after the steamer had cleared Harrison Street Wharf and before the collision. When the Robert Dollar had cleared the Steuart Street Wharf and was about opposite Harrison Street Wharf, her captain saw two bright lights, one above the other, about half a mile distant and about four points off the Robert Dollar's port bow. He knew that they were the lights of a tug, and with his night glasses "looked plainly to see in what position they were." On leaving the dock he had given the customary "one long whistle" to indicate that his steamer was going out, and when about 1,000 yards from the wharf he heard one whistle from the tug Tiger and answered with one. The testimony of the captain of the Robert Dollar is to the effect that at the time the Tiger gave the one whistle she was from 1,000 to 2,000 yards from his steamer, and the testimony of the captain of the Harold Dollar is that the two vessels in question were then about a third of a mile apart. It is certain that they were a long distance apart, and as the night was so bright and clear, according to the testimony of the captain of the Robert Dollar himself, that he could see all over the bay, and as he further testified that with his night glasses

Digitized by Google

he steadily watched the movements of the tug and saw that her course was not changed, surely good seamanship on his part should have prevented the collision, notwithstanding the clear and conceded faults on the part of the tug. Since the latter had the Robert Dollar on its starboard side, the rule of the road imposed upon the tug the duty of keeping out of the way of the steamer, and upon the latter the duty of keeping her course and speed. Articles 19 and 21 of Act June 7, 1897, c. 4, 30 Stat. 101 (U. S. Comp. St. 1901, p. 2883); Rule 2 of Supervising Inspectors. That the Robert Dollar did not keep her course is distinctly and repeatedly stated in the testimony of her captain. The fact that he continually ported the helm of the steamer and threw her further to the starboard, from the time the tug gave her one whistle until the danger of collision became immediate and imminent, thinking that in view of the condition of the tide such action would be more apt to avoid the tug, does not change the fact that he violated the rule of the road which required him to keep his course. And since the case shows that the collision barely occurred at it was, it seems highly probable that but for the deviation of the course of the steamer by her captain the collision would not have occurred, notwithstanding the gross faults of the tug. Moreover, it clearly appears from the testimony of the captain of the Robert Dollar that the two vessels were gradually coming together and that notwithstanding the tug had signaled that she would port her helm so as to cross the stern of the steamer, it had not in fact changed its course, for he still saw the two perpendicular lights, and could not see either the red or green light of the tug. During all of this time the captain of the steamer, according to his own testimony, was uncertain as to the course the tug would take. He said: "I expected him (the captain of the tug) to turn at any moment. I knew he was not turning. I was watching him closely with my glass, I could see the barge but not the tug. I could see they were coming close together." Notwithstanding this, the captain of the steamer gave no indication by whistle or otherwise of his uncertainty as to the course or intention of the tug, but continued to deviate from his own course, in further violation of rule 3 of the pilot rules, which provides, among other things, as follows:

"If, when steam vessels are approaching each other, either vessel fails to understand the course or intention of the other, from any cause, the vessel so in doubt shall immediately signify the same by giving several short and rapid blasts, not less than four, of the steam whistle; and if the vessels shall have approached within half a mile of each other, both shall be immediately slowed to a speed barely sufficient for steerageway until the proper signals are given, answered and understood, or until the vessels shall have passed each other."

It is unnecessary to decide or consider whether there was still other and further fault upon the part of the steamer, as is contended on behalf of the libelant and intervener, as, for the reasons above stated, we are of opinion that the court below was clearly right in finding both vessels in fault.

Accordingly, the judgment is affirmed.

Since the foregoing opinion was prepared, the proctors for the appellant have called our attention to the recent case of Owners of the

Digitized by Google

Albano v. Allan Line Steamship Company, Ltd., decided by the Privy Council of England on appeal from the Supreme Court of Canada (Maritime Law Cases, New Series, October, 1907, 365), in which case it appeared that two steamships—the Parisian and the Albano—were approaching each other on courses which converged almost at right angles at the point where the collision took place, which point was about the place where each of the vessels expected to pick up a pilot.

The case made on behalf of the owners of the Parisian, as stated by the court, was as follows: The Parisian was a screw steamship of 3,385 tons net register, and 440 ft. in length, belonging to the Allan Line Steamship Company, Limited, and, whilst bound from Liverpool with passengers and general cargo, was proceeding towards Halifax Harbor on the afternoon of the 25th March, 1905, to pick up a pilot and proceed under his charge into Halifax. The weather was fine and clear, the sea calm, the wind southerly and very light, and there was no perceptible tide. Shortly before 4:40 p. m. the Parisian was steering N. W. ¾ N. magnetic, and, with engines working at full speed, was making about 14 knots. She was coming in along the western shore in the ordinary and usual way to the pilot station, and was flying flags for a pilot. A good lookout was being kept on board of her. At about 4:40 p. m. those on board of her saw the pilot cutter at the pilot station, just outside the entrance to the harbor. The engines were accordingly rung "stand by" at 4:52, at 4:57 they were reduced at half speed, and 4:58 they were slowed, and at 4:59 they were stopped and remained stopped until 5:6, and the helm was ported a little to bring the Parisian's head more on to the pilot cutter. After the engines were stopped the Parisian quickly lost headway, and a row boat accordingly left the cutter with a pilot on board for the Parisian, and was rowed to her. The Parisian was then lying practically stopped in the water with her head about N. by W. magnetic. When the row boat came along the starboard side of the Parisian a rope was thrown to her, and the pilot, at about 5:6 was just about to step onto the ladder, which had been put over side for him, to come on board. Whilst the Parisian was thus engaged the steamship Albano, after mistaking her course for Halifax Harbor and running too far to the eastward on a north by easterly course, had turned around and was approaching the harbor on a westerly and southerly course. Those on board the Parisian first saw the smoke from the funnel of Albano close to the northeast land, and at 4:45 made out her hull about 5¾ miles distant and more to the westward. The Albano afterwards approached on the starboard side of the Parisian with the Parisian and the pilot cutter and the row boat in full view. At about 5:6 p. m., after sounding three short blasts on her whistle, she came on at a high rate of speed, heading for the starboard side of the Parisian about amidships, and making a collision unavoidable. The Parisian, to avoid being struck in the engine room, promptly put her engines full speed ahead, and about half a minute later was struck by the stem of the Albano a very heavy blow on the starboard side aft. The vessels met at about a right angle, and the Parisian was cut into so deeply that to avoid sinking in deep water she had to run into Halifax Harbor, where she immediately sank.

Digitized by Google

The case made on behalf of the owners of the Albano was that the Albano, a screw steamship of 2,423 tons net register, whilst on a voyage from Hamburg to Halifax, was, about 20 minutes before the collision, standing across from the eastward on a course of W. S. W. ¾ W. magnetic, towards the pilot station at the entrance to Halifax Harbor, and with engines working at full speed was making about 9 knots. The weather was fine and clear, the wind a moderate southerly breeze, and the tide was flood setting towards the harbor at less than half a knot per hour. In these circumstances those on board the Albano saw the Parisian coming up from the south seven or eight miles distant, and about six points on the port bow. The course was afterwards altered to W. ¼ S. for the pilot cutter, and as the Albano approached it the engines were rung "stand by" and afterwards reduced to half speed and slow. When the Albano was distant about five lengths from the Parisian immediate danger of collision first appeared to those on board the Albano, and she at once stopped and reversed her engines full speed, and at the same instant sounded three short blasts of her whistle. The rudder was kept amidships and she kept her course with diminishing momentum. The engines worked full speed astern for two minutes before and up to the time of collision, and the Albano at the time of the collision was almost dead in the water, and the starboard side of the Parisian came in contact with the stem of the Albano.

The regulations in force in the waters where the collision took place, so far as applicable to the case, were as follows:

"Art. 19. When two steam vessels are crossing so as to involve risk of collision the vessel which has the other on her own starboard side shall keep out of the way of the other."

"Art. 21. Whereby any of these rules one of two vessels is to keep out of the way the other shall keep her course and speed.

"Note.—When in consequence of thick weather or other causes such vessel finds herself so close that collision cannot be avoided by the action of the giving-way vessel alone, she also shall take such action as will best aid to avert collision.

"Art. 22. Every vessel which is directed by these rules to keep out of the way of another vessel shall, if the circumstances of the case admit, avoid crossing ahead of the other.

"Art. 23. Every steam vessel which is directed by these rules to keep out of the way of another vessel shall, on approaching her, if necessary, slacken her speed, or stop or reverse."

"Art. 27. In obeying and construing these rules due regard shall be had to all dangers of navigation and collision, and to any special circumstances which may render a departure from the above rules necessary in order to avoid immediate danger."

The judgment of their Lordships was that although the Parisian arrived at the point of collision first, and was there almost without motion, the consideration of the situation should be carried back to the time when the two vessels were approaching the spot where the collision took place and the controlling fact considered that "they were, in fact, converging on a spot on courses and at speeds which would probably bring them to that spot so as to present a danger of collision when they reached it, which each of them would do in the course of her navigation," in which circumstances the vessels were vessels crossing so as to involve risk of collision, and that articles 19, 22, and 23 were applicable. It was therefore held that it was the duty of the

Digitized by Google

Parisian to have kept out of the way of the Albano. But the court also held that the Albano was also bound to comply with article 21, "and to keep her course and speed until she found herself so close to the Parisian that the collision could not be avoided by the action of the latter vessel alone." Upon the facts of the case, however, the Albano was held without blame, the court saying, among other things:

"It must always be a matter of some difficulty for the master of a vessel which has to keep her course and speed with regard to another vessel which has to keep out of her way to determine when the time has arrived for him to take action, for if he act too soon he may disconcert any action which the other vessel may be about to take to avoid his vessel, and might be blamed for so doing, and yet the time may come at which he must take action. Therefore he must keep his course and speed up to some point and then act, but the precise point must necessarily be difficult to determine, and some little latitude has to be allowed to the master in determining this."

In conclusion, the court observed:

"That the regulations are the outcome of experience and of conferences held by representatives of the maritime nations, and if firmly acted on and applied are more likely to obviate the doubts and difficulties by which those navigating vessels may be assailed—for instance, in cases similar to the present case, which may not infrequently arise where vessels are making for the entrance of a port at the same time—than if the actions of those in charge are to be guided by rough estimates of courses and speeds to determine which vessel is slightly ahead of the other, and considered afterwards by the light of conflicting evidence as to whether these estimates were right or wrong."

We think the decision of their Lordships in the case cited in line with our conclusion in the present case that both the tug Tiger and the steamer Robert Dollar were in fault in the particulars hereinbefore indicated.

The judgment is affirmed.

NOTE.—The following is the opinion of De Haven, District Judge:

DE HAVEN, District Judge. The collision between a barge in tow of the tug Tiger and the steamer Robert Dollar, which is the subject of this action, occurred about one o'clock on the morning of July 13, 1905, in the Bay of San Francisco. The night was clear. In view of this fact, it is evident the collision would not have been possible without the fault of one or both of the vessels, and upon consideration of all of the evidence my conclusion is that both were in fault. The Tiger was in fault in having no lookout, and in not going to starboard as indicated by her signal of one whistle, given at the time she was first observed by the Robert Dollar, and while it is true the Tiger was the obligated vessel, having the Robert Dollar on her starboard side, still the Robert Dollar was in fault in continuing to go ahead after her master saw that there was no change of course on the part of the Tiger, and after it ought to have been apparent to him that the strong ebb tide was carrying his vessel so far out of her course that a collision was likely to occur, unless her engines were stopped and reversed; but the order to stop the engines of the Robert Dollar was not given until the collision was inevitable. As both vessels were in fault, the libelant and intervener are entitled to recover against both; the damages to be equally apportioned between them, and any balance of such moiety which the libelant or intervener shall be unable to collect or enforce against either vessel shall be paid by the other vessel or stipulators, to the extent of the stipulated value thereof beyond the moiety due from said vessel. The Alabama and The Gamecock, 92 U. S. 695, 23 L. Ed. 763.

2. On October 21, 1905, the libelant paid to the intervener the sum of $2,734.80 for its loss under the policy of marine insurance referred to in the libel, and, in consideration of such payment, it was agreed that the said libelant should become "subrogated in full to all of the rights of the insured (the

Digitized by Google

intervener) in and about the subject-matter of the insurance * * * and to all of the rights of said insured against the wrongdoer causing said loss, in such proportion as the amount of the insurance in said policy bears proportionately to the insured valuation, in said policy, with full privilege and authority to sue in the name of the insurer, but at the expense of the insurer, but in no event to exceed $3,000."

The libelant is entitled in this action to recover no greater sum, with interest and costs, than is provided for in the agreement just referred to, and the decree will provide that the whole amount of damages recovered in this action shall be divided between the libelant and the intervener in accordance with the terms of such agreement.

Let a decree be entered in favor of the libelant and intervener against the tug Tiger and the steamer Robert Dollar, for damages and costs in accordance with the foregoing opinion. The amount of damages recovered to bear interest from the date of the filing of the libel herein, and the matter will be referred to United States Commissioner Brown, to ascertain and report the damages sustained by the libelant and the intervener.

(160 Fed. 882.)

BABCOCK et al. v. DE MOTT et al.*

(Circuit Court of Appeals, Eighth Circuit. March 10, 1908.)

No. 2,609.

1. PRINCIPAL AND AGENT—EXECUTION OF AGENCY—FRAUD OF AGENT.

An agent for the sale of real estate, who receives a price in excess of that reported and accounted for to his principal, is liable to such principal for the difference.

[Ed. Note.—For cases in point, see Cent. Dig. vol. 40, Principal and Agent, §§ 130–133.]

2. APPEAL AND ERROR—REVIEW—ISSUES OF FACT.

The decision of a chancellor on an issue of fact is presumptively correct, and will not be disturbed by an appellate court except for a clear and palpable mistake.

[Ed. Note.—For cases in point, see Cent. Dig. vol. 3, Appeal and Error, §§ 3970–3978.]

3. EQUITY—REFERENCE WITHOUT CONSENT.

The reference of a case to a master, without the consent of parties, to make findings of fact, is not error where such findings are treated as advisory only, and the ultimate findings are made by the court.

4. ABATEMENT AND REVIVAL—ANOTHER ACTION PENDING—IDENTITY OF PARTIES.

It is not ground for abatement of a suit in a federal court that a suit between the defendants, involving some of the same issues, is pending in a state court, where the complainants are not parties to such suit, and the court therein has not assumed custody of property.

[Ed. Note.—For cases in point, see Cent. Dig. vol. 1, Abatement and Revival, §§ 73–91.

Pendency of action in state or federal court as ground for abatement of action in the other, see notes to Bunker Hill & Sullivan Mining & Concentrating Co. v. Shoshone Min. Co., 47 C. C. A. 205; Barnsdall v. Waltemeyer, 73 C. C. A. 521.]

Appeal from the Circuit Court of the United States for the District of Kansas.

Milton Brown, for appellants.

A. B. Jetmore and Gardenhire & Jetmore, for appellees.

Before SANBORN, HOOK, and ADAMS, Circuit Judges.

*Rehearing denied April 17, 1908.

Digitized by Google

ADAMS, Circuit Judge. This was a bill in equity brought by Anna M. De Mott, Mary E. Justin, and Julia G. Brooks, citizens of New York and New Jersey, against W. P. Taylor and J. E. Taylor, composing the firm of real estate agents known as W. P. Taylor & Son, Ralph L. Maxson, Lewis A. Withers, Henry Schlichting, George E. Babcock, and William Franke, citizens of Kansas and Iowa, for an accounting and other equitable relief. The Circuit Court rendered a decree in favor of the complainants, from which defendants Taylor, Babcock, and Franke alone appeal.

The great features of this case are so prominent and controlling that little consideration is due to the numerous smaller matters to which our attention seems to be seriously directed. The facts found by the trial judge which are abundantly supported by the proof are substantially as follows: In 1901 the complainants, who owned a section of land in Woodson county, Kan., employed Taylor & Son as their agents to sell it for them on an agreed commission for such service. The asking price was fixed at $9,000, but the agents afterwards induced their principals to accept $6,000 for the land. Before doing so, they had secured an offer from defendant Babcock of $8,500, provided they could arrange to procure and carry for him a loan of $6,500, to be secured by a mortgage on the land. In other words, Babcock offered to pay $2,000 in cash for the land incumbered by mortgage or mortgages securing loans to the extent of $6,500. The agents had some misunderstanding with Babcock which will be considered later; but for the present we will assume the foregoing facts to be true.

How to make the sale for $8,500, appropriate $2,500 to their own use, and account to complainants for $6,000, and do these things without exposure, seems to have been the problem confronting the agents. They proceeded in this way: They got complainants to execute a deed to one of their relatives, the defendant Maxson, in which the consideration was stated to be $6,000. This deed was forwarded to the agents for delivery on receipt by them of the consideration mentioned. After they received the deed, the consideration was changed to read $12,000, and, as so changed, the deed was delivered to Maxson and recorded in the office of the register of deeds for Woodson county. The agents procured a loan from an insurance company secured by a first mortgage on the land, executed by Maxson, for $4,500, persuaded Babcock to temporarily advance $2,000 on his purchase, forwarded $6,000 less deduction for their agreed commission to the complainants and pocketed $500 on this initial transaction. They then got Maxson, the owner of record, to execute a second mortgage on the land to secure a promissory note of $2,000 made by him payable to defendant Withers. Withers had no interest in the matter and acted exclusively for the benefit of the agents. He indorsed this note and delivered it to them, who claim to have subsequently pledged it to defendant Schlichting to secure the payment of some antecedent debt. With these two incumbrances aggregating $6,500 resting on the land, the agents caused Maxson to convey it to Babcock in execution of the original agreement to sell.

Digitized by Google

Babcock subsequently conveyed the same to defendant Franke subject to the same incumbrances. The result of the maneuver was that Babcock and his grantee got title to the land incumbered by mortgages securing notes amounting to $6,500. The complainants got $6,000, and their agents got $500 in money and the note of $2,000.

Defendant Babcock and his grantee set up a special defense to the effect that Taylor & Son had cheated and defrauded Babcock by agreeing to cause the land in question to be conveyed to him upon his paying $2,000 in cash and assuming the payment of a prior mortgage debt of $5,000 only. It is claimed that after Babcock had advanced the $2,000 to the agents, they caused the property to be conveyed to him subject to prior mortgages of $6,500, instead of $5,000, as agreed; that he inadvertently accepted a deed to that effect; that he was thereby defrauded out of $1,500; and that that amount, at least, should be credited upon the $2,000 note before a lien should be decreed against the land for its payment.

On the foregoing facts the Circuit Court entered a decree divesting Schlichting, Taylor & Son, and all other defendants of title to the note of $2,000, vesting the same in complainants, establishing a lien for the payment thereof against the land in question, and rendered a personal judgment in favor of the complainants against W. P. and J. E. Taylor for $500 and interest. The court further decreed that, unless the note of $2,000 be paid within a time fixed, the land should be sold subject to the lien of the first mortgage, for the purpose of raising a fund to pay the note.

The facts of this case clearly warranted the decree so far as the Taylors are concerned. They, while acting for and in the name of their principals, secured not only the $6,000 for which they accounted, but also $2,500 more for which they did not account. No justification is attempted to be made or can be made of their conduct. They were perfidious and false to their principals, took advantage of their confidential relation to secure personal benefits, and must, on most familiar principles of equity, be held responsible for all they personally acquired by their perfidy. 1 Perry on Trusts, § 206; Bent v. Priest, 86 Mo. 475. No principle of equity is better settled than this, and none should command a more vigorous or effective enforcement at the hands of this or any other court.

As no appeal is taken by Schlichting or any other claimant of the note in question, all that remains for our consideration is the special defense set up by Babcock and his grantee. Babcock contends and testifies that his contract with the Taylors was to pay $2,000 in cash for the land subject to incumbrances securing the payment of $5,000 only instead of $6,500 as it turned out to be when the deed was delivered to him. In other words, he contends that his agreement was to pay $7,000 for the land, instead of $8,500, and that he was overreached by leaving it in the power of the Taylors to fix the amount of incumbrances after they had received the cash payment of $2,000 and before the deed was finally executed. If this contention is correct, the land should not be charged with a lien of $2,000, but with a lien of $500 only, and complainants' recovery

Digitized by Google

should be reduced accordingly. If, on the other hand, Babcock agreed to pay $8,500, $2,000 in cash and $6,500 in assumption of prior mortgage debts, as found by the trial court, the decree below is right and should not be disturbed. This presents a single issue of fact for determination. We have examined the proof on this issue with much care, with the result that we are satisfied with the conclusion reached below. Under well-recognized practice the conclusion of the chancellor on an issue of fact is presumptively correct and ought not to be disturbed except for a clear and palpable mistake. No such mistake appears in this case.

The trial court, without consent of the parties, referred the case to a special master to read and examine the evidence as taken and report the facts to the court. There was no reversible error in this, because there was no abdication of the judicial function by the trial judge. Mastin v. Noble, 85 C. C. A. 98, 157 Fed. 506. His opinion affirmatively shows that he found the facts as a result of a personal consideration of the proof filed in the case.

The fact that Babcock had commenced a suit in the state court of Kansas to secure a reformation of his deed from Maxson and a cancellation of the Withers mortgage to secure the payment of the note for $2,000, and that such suit was pending and undetermined when this suit was instituted, afforded no ground of defense or abatement of this suit, for the reason that complainants were not a party to it, and custody or dominion of specific property was not sought or taken in it. City of Mankato v. Barber Asphalt Paving Co., 73 C. C. A. 439, 142 Fed. 329, 340, and cases cited.

The numerous other assignments of error have been sufficiently considered to convince us that nothing was done or left undone in the trial below which prejudicially affected the result reached.

The decree of the Circuit Court was clearly right, and is affirmed.

NOTE.—The following is the decision of Pollock, District Judge, on exceptions to report of special master:

POLLOCK, District Judge. The material facts in this case, as gathered from the proofs, are as follows:

In May, 1901, complainants, the owners of a section of land in Woodson county, this state, placed it in the hands of defendants W. P. Taylor and son, J. E. Taylor, partners as Taylor & Son, for sale at the price of $9,000. Taylor & Son were unfaithful to the trust reposed in them by complainants and commenced scheming to make a profit to themselves by a sale of the property over and above the commission which they agreed to receive from complainants for making the sale, and in the execution of this scheme proceeded in this manner:

They opened negotiations for the sale of the land to defendant Geo. E. Babcock, a citizen of Iowa, and having learned he would pay much more than $6,000 for the land, they knowingly and falsely represented to complainants that said sum of $6,000 was all the land was worth, and all they could procure for the same, and on the strength of these false representations induced complainants to part with title to the land for the sum of $6,000, less their commission for the making of the sale. The manner in which this was carried into effect was this: They caused the deed from complainants to be executed to defendant Ralph L. Maxson, a relative who at no time had any interest in the transaction, for their benefit. The true consideration of $6,000 expressed in the conveyance from complainants to Maxson, when it left the hands of complainants, was changed by Taylor & Son, or at their instance,

Digitized by Google

to $12,000, and the purchase price of $6,000 agreed to be paid complainants was procured by Taylor & Son in this manner: Under an arrangement by which defendant Babcock was to secure the land, they induced him to advance $2,000 of the purchase money, and caused Maxson to execute a first mortgage on the land to secure the payment of a present loan of $4,500, secured from the Union Central Life Insurance Company. Also, causing Maxson to execute a second mortgage on the land to secure a promissory note made to one Lewis A. Withers for their benefit, Withers at no time having any interest in the transaction, and then causing Maxson to convey the land to Babcock in consideration of the $2,000 he had paid subject to the two mortgages made by Maxson thereon, aggregating $6,500, which mortgages, according to the terms of the conveyance, Babcock assumed and agreed to pay.

Of the $4,500 loan secured from the life insurance company, Taylor & Son put $500 in their pocket and forwarded the remaining $4,000 and the $2,000 secured from Babcock, less their commission charged complainants for making the sale, to complainants, and then procured Withers to indorse and deliver to them the note of $2,000 secured by the second mortgage on the land, and then pledged this note with defendant, Henry Schlichting, to secure the payment of a pre-existing debt owed by Taylor & Son. The conveyance made by Maxson to Babcock was caused to be recorded by Taylor & Son and then forwarded to Babcock at his post office address in the state of Iowa. When Babcock received this conveyance, not being satisfied with it, because, as he claimed, he was to have a conveyance direct from complainants and was to pay only $7,000 as the purchase price of the land, he came to Kansas, took possession of the property, commenced an action in the state court to cancel the second mortgage placed on the land by Maxson, and to cancel his contract of assumption of this mortgage in the conveyance to him.

Complainants having learned their unfaithful agents, Taylor & Son, had secured the sum of $8,500 in the sale of their land, and not the sum of $6,500 as represented by their unfaithful agents, commenced this suit for an accounting with Taylor & Son, and prayed for recovery of the sum of $500 appropriated by Taylor & Son from the purchase price, and also a decree declaring the promissory note of $2,000 and the second mortgage executed by Maxson, now held by defendant Schlichting to secure a pre-existing debt, to be their property, because received by Taylor & Son as part of the purchase price for their land, and to have said mortgage foreclosed subject to the rights of the Union Central Life Insurance Company in the land.

Babcock defends in this suit on the theory and claims that under his oral agreement with Taylor & Son he was to pay but $2,000 in cash and accept a conveyance for the land subject to a mortgage of only $5,000. Before this suit was commenced, Babcock, in recognition of his title to the property, sold and conveyed it to defendant William Franke, who now owns the land. The master found from all the proofs that Babcock agreed to pay $8,500 for the land, $2,000 in cash and accept a conveyance subject to mortgages thereon aggregating $6,500, all as expressed in the conveyance from Maxson to him, and not the sum of $7,000, as contended by Babcock. To this finding Babcock excepts, and this is the only question of merit arising for decision presented by the record.

It is clear beyond all doubt as between complainants, Taylor & Son and Taylor & Son, Maxson, and Withers, complainants are entitled to receive on this accounting all of the purchase price of their land received by their unfaithful agents, Taylor & Son. Therefore, as against these defendants, complainants are undoubtedly entitled to a decree as prayed. It is equally true that as the defendant Henry Schlichting holds the promissory note of $2,000 made by Maxson, secured by the second mortgage on the land as security for a pre-existing debt, he is not a bona fide holder thereof, and the complainants are also entitled to a decree as prayed as against him.

As between complainants and defendant Geo. E. Babcock, I am of the opinion the same conclusion must be reached. If the conveyance made to Babcock by Maxson at the instance of Taylor & Son, the unfaithful agents of complainants, was not in accordance with their prior agreement, as claimed, by Babcock, he had his remedy to refuse the conveyance tendered and to recover back the $2,000 cash theretofore paid by him as part purchase price

Digitized by Google

of the land, or, if so advised, and his contract for the purchase of the land was valid and enforceable, he could have refused the conveyance tendered by Taylor & Son as executed by Maxson and compelled specific performance of his contract. However, he did not elect either of these remedies, but, while attempting to repudiate the conveyance as made by Maxson, he has parted with the title to the property thereby conveyed to him in recognition of its validity as a conveyance. Having thus recognized the validity of the conveyance, his contract in writing, as expressed by the conveyance, must control.

From all the evidence in the record the master found the price to be paid by Babcock for the land was the sum of $2,000 and the acceptance of a conveyance of the land subject to the mortgages, aggregating $6,500, and not the sum of $7,000, as contended by Babcock. From an examination of the record I am convinced the report of the special master in this regard is correct, and therefore the exceptions to the report must be overruled, and the same confirmed.

A decree will be entered in favor of complainants against Taylor & Son for the sum of $500, and interest received by them as part purchase price of complainants' land.

A further decree in favor of complainants awarding to complainants the promissory note of $2,000, and second mortgage executed by Maxson to Lewis A. Withers, received by Taylor & Son as part purchase price of complainants' lands.

A further decree will enter foreclosing this mortgage subject to the lien of the mortgage held by the Union Central Life Insurance Company.

The decree will further provide if the amount of this promissory note of $2,000 and the costs of this litigation are not paid within 30 days from the date of the decree, a special master to be appointed by the court will, in conformity with the practice in this court, advertise and sell the real estate in satisfaction of the amount found due upon said promissory note and the costs of this litigation.

It is so ordered.

(160 Fed. 887.)

LAKE v. SHENANGO FURNACE CO.

(Circuit Court of Appeals, Eighth Circuit. March 14, 1908.)

No. 2,614.

1. MASTER AND SERVANT—NEGLIGENCE—ASSUMPTION OF RISK—NUMBER OF SERVANTS—FACTS.

The deceased and two fellow servants had been operating a hand hoist and lowering timber with it into the shaft of a mine for about a month, when the master directed him to operate it with one co-workman, and he did so without objection. The hoist consisted of a chain attached to a rope which ran over a pulley suspended to a tripod above the shaft, and the other end of the rope was attached to a drum by which the rope was wound up by the use of adjustable cranks on the ends of the drum, and the descent of the load was controlled by a friction brake applied to the drum by a lever. After the chain was fastened around the load, it was necessary to wind the rope up until it was taut, and to apply the brake upon a signal from the chainman before the load slid or swung into the shaft, because it was so heavy that the workmen could not hold it up with the cranks. After six or seven loads had been safely lowered by the two men, the deceased, who was acting as chainman, directed his fellow workman to continue to wind up the rope so long that it slid the load into the shaft before the brake was applied. *Held*, the deceased assumed the risk of operating the machine in this way with but one assistant.

[Ed. Note.—For cases in point, see Cent. Dig. vol. 34, Master and Servant, §§ 559–566.

Assumption of risk incident to employment, see note to Chesapeake & O. R. Co. v. Hennessey, 38 C. C. A. 314.]

Digitized by Google

2. SAME—EVIDENCE OF CHANGE AFTER ACCIDENT INADMISSIBLE.

Evidence that after an accident a master employed more men, repaired his machinery, or adopted a different method in the conduct of his business, is inadmissible to prove his negligence at the time of the accident.

[Ed. Note.—For cases in point, see Cent. Dig. vol. 34, Master and Servant, § 918.]

3. EVIDENCE—OPINION EVIDENCE WHEN INADMISSIBLE.

When an issue, its subject-matter, and the facts which condition its decision are simple and open to the common understanding so that no special skill or experience is requisite to form a correct judgment upon it, the opinions of witnesses regarding it are not admissible.

4. NEGLIGENCE—TRUE TEST OF DOUBTFUL ACT CARE PERSONS OF ORDINARY PRUDENCE USE UNDER SAME CIRCUMSTANCES.

An act or omission may be in itself clearly negligent or clearly free of negligence. If its character is doubtful, the test of actionable negligence is the degree of care which persons of ordinary intelligence and prudence commonly exercise in the same circumstances. If the care exercised in such a case rises to or above that standard, there is no actionable negligence; if it falls below that standard, there is.

[Ed. Note.—For cases in point, see Cent. Dig. vol. 37, Negligence, §§ 1-7.]

5. SAME—EVIDENCE OF ORDINARY PRACTICE OF REASONABLE MEN IN SAME CIRCUMSTANCES GENERALLY COMPETENT.

In such a case the evidence of the ordinary practice and of the usual custom, if any, of ordinarily prudent and intelligent persons in the performance under the same or like circumstances of the same or like acts, is ordinarily competent upon the issue of negligence in the performance or omission of an act.

(Syllabus by the Court.)

In Error to the Circuit Court of the United States for the District of Minnesota.

This is an action for damages that resulted from the death of John K. Laurila, which the plaintiff below alleged was caused by the negligence of the defendant company, his master, in that it employed only two when it should have hired three servants to operate the drum used at its shaft No. 2 to lower timber into its mine. The defenses were that the defendant was not negligent, that the deceased asssumed the risk of operating the drum with two men, and that he was guilty of negligence which contributed to his injury. At the close of the evidence the court instructed the jury to return a verdict for the defendant, on the grounds that the deceased assumed the risk of the work in which he was engaged, and that he was guilty of contributory negligence. This and many other rulings are specified as errors. The evidence relative to the place and circumstances of the accident was practically without contradiction, and it disclosed this condition of things:

The accident happened while Laurila and his companion, Tikka, were preparing to let a load of lagging down into the shaft during the afternoon of January 17, 1906. Laurila had been engaged in this work during the afternoons since about the middle of December, 1905, but prior to this day he had been one of three men operating the drum to lower the timber into this shaft, while on the day of the accident he was one of two. The shaft was about 6 feet by 8 feet, 137 feet deep, planked inside, and it had a crib or collar of timber which extended up above the ground a few inches. It was known as shaft No. 2. A tripod made of three posts rose over the shaft, and from it a bolt depended directly over the center of the shaft and about 19 feet above its mouth, to which a pulley was attached, over which the rope ran that was used to lower the timber. A small chain which was used to fasten the timber together and to hold it as it descended into the shaft was fastened to the end of this rope which hung from the pulley over the shaft, and the oth-

Digitized by Google

er end of the rope was secured to a drum which stood upon posts about three feet above the ground on one side of the shaft and about four feet distant from it. This drum was about 7 feet long and 16 inches in diameter where the rope wound about it. Upon one end of this drum was a friction brake operated by a lever five or six feet long, which rested upon the drum, and was made effective by pressing the outer end of it down. When the drum was used to wind up the rope, this lever was held above it by hand or by a stick placed under it, and, when a load was about to be lowered, the support was removed, the lever placed the brake upon the drum, and the descent of the load was controlled by an operator who pressed down upon the outer end of the lever. There was an adjustable iron crank about 18 inches long upon each end of the drum which was used to wind up the rope and to prepare the loads of timber for their descent, but which was removed before these loads were let down into the mine. Treating the apparatus from the station of a person standing on the side of the shaft opposite the drum and facing the latter, there was a stick of timber about six feet long and four inches thick which lay parallel to the collar on the right side of the shaft. The load to be lowered at the time of the accident was about two feet square, and it consisted then, and the loads were generally made up of posts and lagging from six to nine feet long which were laid across the collar of the shaft and the stick of timber so that they projected over the collar about a foot and rested upon the timber and upon the collar which was somewhat worn away, or upon the ice or snow which had gathered between the collar and the stick, so that the chain could be readily passed around each of the ends of the loads without raising them. It was winter, and some ice and snow had gathered about the shaft and upon the posts and lagging, and the surface where the load was placed sloped at the rate of about six inches to eight feet toward the shaft. The load which caused the accident weighed from 750 to 1,500 pounds. The loads lowered into this and other like shafts were generally so heavy that two workmen at the cranks could not hold one of them up after it swung over the shaft, and the only means of controlling its descent was the friction brake. When three men operated the drum, the first held up and upon a signal from the chainman applied the brake, the second adjusted the chain first around the end of the load in the mouth of the shaft, and next around the other end, and then held on to it with his hand until the third man, who operated one of the cranks, took the slack out of the rope and drew it taut by winding it upon the drum. When the rope was thus drawn sufficiently taut, upon a signal from the chainman, the first man pressed down upon his lever, and held the load, the third man removed his crank, the chainman let the rope go, went behind the load, and by lifting its rear end slid or pushed it into the shaft, and the first man then lowered it and controlled its descent by operating the brake. When two men used it, the brake lever was held up by a stick beneath it. One of the men adjusted the chain about the ends of the load, then held on to the rope or chain to steady it with one hand and on to one of the cranks with the other until under his direction the second man had wound the rope sufficiently taut by the use of the other crank. Then, upon a signal from the chainman, the second man removed his crank, removed the stick beneath the lever, seized the lever, and held the load with it until the chainman removed his crank, and slid or pushed the load into the shaft, when the second workman controlled and lowered it by the manipulation of the brake lever.

At the time of the accident the brake was held off the drum by a stick beneath the lever. Tikka and Laurila had lowered six or seven loads down the shaft without the aid of any third workman, with Tikka at the chain and Laurila at the crank, when Tikka took the crank and Laurila adjusted the chain and held onto it with one hand to steady it and onto the crank on his end of the drum with the other until the rope was wound up on the drum to some extent when Tikka inquired of Laurila if it was good, or in other words, if the rope was sufficiently taut, and Laurila replied: "No; wind it a little more." Tikka did so, the load slid into the shaft, the drum and the cranks escaped from the workmen as the load descended, one of the revolving cranks struck Laurila, threw him into the shaft, and killed him.

Digitized by Google

Theodore Hollister (John R. Heino, on the brief), for plaintiff in error.

H. H. Grace (George B. Hudnall, on the brief), for defendant in error.

Before SANBORN, HOOK, and ADAMS, Circuit Judges.

SANBORN, Circuit Judge (after stating the facts as above). The evidence in this case conclusively proved that there was one and only one indispensable condition of safety in the doing of the specific act in the performance of which Laurila lost his life in the lowering of the loads of timber into the shaft, and that condition was that the load should not be slid, or pushed, or swung into or over the shaft until the brake was applied to the drum by means of its lever. If the load went into the shaft before the brake was applied, it would as certainly descend and produce danger of injury and death when three as when two men were operating it, for the law of gravity is uniform and incessant in its work. The loads differed in size and weight, but both at this and at other shafts where similar devices were used they were generally, if not universally, so heavy that they could not be held up by the cranks upon the drums after they swung over the shafts, and this fact was well known to all the workmen about them, and was clearly proved to the jury. This was the reason why the friction brake was provided and used.

The evidence was uncontradicted that it was necessary before the load was swung over the shaft and after the chain had been thrown around its ends that the rope should be wound up so that it was taut, to the end that the timber might be drawn together in a compact body before it started to descend, so that sticks of it would not slip out of the chain and fall down the shaft. The evidence was clear and undisputed that it was the duty of the chainman to steady the chain with his hand as the rope was wound up, to determine when the tension upon it was sufficient to hold the timber together, and insufficient to slide, or tip, or swing the load into the shaft, and then to give the signal to take off the crank and put on the brake, and, after that was done, to push or slide the load into the shaft. This entire duty devolved upon the chainman whether there were two or three men at the shaft, and, in the discharge of this duty, was the one place where the exercise of judgment conditioned the safety of the operation. If the chainman failed to give the signal that the chain was sufficiently taut until the tension became so great that the load slid or swung into the shaft, immediate danger of injury was produced, and that danger was greater when but two men were operating than when there were three, because, if there was a third man at the lever, it was possible that he might catch and hold the load after it swung into the shaft, although he did not receive any signal to apply the brake.

The apparatus was simple. It was nothing but a windlass with a crank and a rope attached, the latter of which ran over a pulley above. No workman of intelligence sufficient to use the simplest tools could have assisted in operating this windlass with two la-

Digitized by Google

borers for a month and with one for an hour as Laurila did without plenary knowledge that the law of gravity would draw the load down the shaft if it was permitted to swing over it; that in such an event it could not be held up with the cranks; that the application of the brake before the load slid or swung into the shaft was indispensable to the safe operation of the machine; that he had but one assistant at the time of the accident; that, when he operated the chain, the timely application of the brake depended entirely upon his judgment and his signal; and that, if he failed to rightly exercise the former or to give the latter in time, disaster and injury were the natural and probable consequences of his dereliction. Yet, without objection or protest, he entered upon the discharge of the duty of chainman with a single assistant, and by his failure to give the signal to his companion to cease winding up the rope and to put on the brake until the latter had wound it so taut that it lifted or slid the load into the shaft he brought down upon himself the direful result.

A servant by entering or continuing in the employment of a master without complaint assumes the risks and dangers of the employment which he knows and appreciates. St. Louis Cordage Co. v. Miller, 61 C. C. A. 477, 490, 493, 126 Fed. 495, 508, 511, 63 L. R. A. 551, and cases there cited; Glenmont Lumber Company v. Roy, 61 C. C. A. 506, 510, 126 Fed. 524, 528; Burke v. Union Coal & Coke Co., 84 C. C. A. 626, 157 Fed. 178, 180, 181. Counsel argue that the deceased did not fall under this rule because he did not know the weight of the load, because he did not know how much tension on the rope would raise the load or slide it into the shaft, and because he did not appreciate the danger from the act that he and his companion were performing that the load would slide into the shaft. They call attention to the testimony of the superintendent of the defendant that if the load lay as stated by the witnesses, and if it weighed 1,500 pounds, it could not have been sent into the mine by the use of one of the cranks by a workman because he could raise only about 300 pounds thereby, and to the testimony of the surface boss that in his opinion one man at the crank could not slide a load into the shaft if it rested on a few little projections on the top of a round surface of timber and to varying estimates made by witnesses of the weight of the load. There were, however, two men at the cranks—Tikka, who devoted all his energy to one of them, and Laurila, who used one hand upon the other. The superintendent testified that in his opinion the load weighed only 750 pounds, that a lift of 400 pounds on the rope would have sent it into the shaft, and that one man could lift 300 pounds upon the rope by the use of the crank. It follows that two men could lift 600 pounds, and, if both men exercised their powers, they could have thrown the load into the shaft. Moreover, an appreciation of the risk and danger was not conditioned by an exact knowledge of the weight of the load, or of the amount which one man could lift upon the rope by the use of one of the cranks. There was a crank upon each end of the drum and there was a man at work at

Digitized by Google

each crank. The fact that whether there was one man or there were two men at the cranks a signal was given when the rope was sufficiently taut demonstrates the knowledge and the appreciation by the workmen of the danger of permitting any man to exert all his force upon the crank without any limitation by a sign from the chainman. The only reason for the signal was to prevent the danger of sliding or swinging the load into the shaft before the brake was applied. It was the risk of this danger in the absence of the third man that confronted Laurila. He knew that the third man was not there, and that the brake could not be applied until he gave the signal to stop the winding of the rope. He knew that the load lay by the side of the shaft on an inclined plane upon the worn collar, the parallel timber, or ice and snow between them, that the load was so heavy that, if he permitted it to swing or slide into the shaft, he and his associate could not hold it with the cranks. He had assisted to operate that drum for many days. He knew that a signal had always been given to stop turning the crank before the load was pushed into the shaft, and the danger that he and his companion might slide it in there by turning the cranks if the signal was not given, or, if it was given too late, was too obvious, too plainly observable for denial. A servant cannot be heard to say that he did not appreciate or realize the danger or the risk where the defect is obvious or readily observable, and the risk and danger are apparent. St. Louis Cordage Co. v. Miller, 61 C. C. A. 477, 493, 126 Fed. 495, 511, 63 L. R. A. 551; Glenmont Lumber Company v. Roy, 61 C. C. A. 506, 510, 126 Fed. 524, 528.

It is said that the risk of the master's negligence is not one of the ordinary risks of the employment, and hence that the servant does not assume it, and this is doubtless true when the master's negligence and its effect are not known or obvious to the servant and the risk and danger from them are not appreciated; but if the servant knows of the failure of his master to completely discharge his duty to exercise ordinary care to furnish sufficient servants or ordinarily safe appliances, and if he appreciates its effect, or if the failure and its effect are obvious or plainly observable and he continues in the employment without objection, he elects to assume the risk of them and he cannot recover for the damages they cause. Texas & Pacific Railway Co. v. Archibald, 170 U. S. 665, 672, 18 Sup. Ct. 777, 42 L. Ed. 1188; Choctaw, Oklahoma & Gulf Railroad Co. v. McDade, 191 U. S. 64, 68, 24 Sup. Ct. 24, 48 L. Ed. 96; Burke v. Union Coal & Coke Co., 84 C. C. A. 626, 157 Fed. 178, 181.

Counsel argue that the deceased did not assume the risk and danger of operating this machine with but one workman because his master did not warn him of them; but no duty rests on the master to warn a servant of risks and dangers that are so apparent that a person of his ability and experience in his station may reasonably be held to have known and appreciated them. Bohn Manufacturing Company v. Erickson, 5 C. C. A. 341, 344, 55 Fed. 943, 946; Glenmont Lumber Company v. Roy, 126 Fed. 524, 528–529, 61 C. C. A. 506; King v. Morgan, 48 C. C. A. 507, 510, 109 Fed. 446, 449; Railroad Company

Digitized by Google

v. Miller, 43 C. C. A. 436, 104 Fed. 124; Mississippi River Logging Company v. Schneider, 20 C. C. A. 390, 392, 74 Fed. 195, 197.

The next objection is that assumption of the risk was not pleaded by the defendant, but it rests on the maxim, "Volenti non fit injuria," and inheres in the contract of hiring, and, if it were necessary to plead it, a proposition that is not conceded, the answer contains an averment that "Laurila assumed the risks of injury incident to carrying on said work," which would have been sufficient in the absence of objection in the court below. The result is that the uncontradicted evidence disclosed the fact that the defect in the company's method of operation, of which the plaintiff complains, was obvious, and the danger from it was apparent, and he continued in the service without complaint. The defense of assumption of risk is conclusively established in such a case, no question remains for the jury, and the court rightly instructed them to return a verdict for the defendant. This conclusion rests upon the mere assumption, and not upon any decision or opinion, that there was substantial evidence at the trial below of the alleged negligence of the defendant. The question whether or not there was such evidence and the question whether or not the evidence of the contributory negligence of the deceased was conclusive are no longer material, and will not be farther discussed than to say that the testimony and the considerations which have already been set forth amply sustain the decision of the court below upon the latter question. We turn to the rulings upon the admission and rejection of evidence.

Specifications 1, 2, 3, 6, and 7 are leveled at the refusal of the trial court to receive testimony of the method of operation of the drum by the defendant and of the number of men employed by it for that purpose at shaft No. 2 after the accident. But evidence that, after the accident, a master repaired his machinery, adopted a different method of operation, or employed a larger number of men in conducting his business, is incompetent because it has no legitimate tendency to prove that the number of men employed, the method pursued, or the machinery used before the accident was not reasonably safe and sufficient, and because the reception of such evidence would deter the master from improving his methods and machinery. Railroad Company v. Hawthorne, 144 U. S. 202, 208, 12 Sup. Ct. 591, 36 L. Ed. 405; Motey v. Pickle Marble & Granite Company, 20 C. C. A. 366, 371, 74 Fed. 155, 159; Railway Company v. Parker, 5 C. C. A. 220, 222, 55 Fed. 595, 597; Camp Bird v. Larson, 81 C. C. A. 412, 414, 152 Fed. 160, 162.

The trial is attacked because the court below rejected the proffered testimony of witnesses familiar with the operation of the apparatus in the use of which the accident occurred that it was in their opinion dangerous to operate it with less than three workmen. But the rule is that witnesses must state facts, and not opinions. There is an exception to it that the opinions of witnesses who possess peculiar skill or knowledge may be received when the facts are such that inexperienced persons are likely to prove incapable of forming a correct judgment from them in the matter at issue without such opinions.

Digitized by Google

But there was nothing in the facts or in the subject of the issue in this case that was not open and plain to men of common understanding. When the facts were established it was as evident to the jury, or to any one of ordinary comprehension who knew them, as to the most experienced operator of the drum, whether or not the crucial signal could be given at the proper time with safety when only two men were operating the drum, and that was the real issue which conditioned the defendant's negligence. There was no necessity for the opinions of witnesses upon this question, and, when the necessity does not exist, the exception to the rule does not operate and the rule prevails. The testimony of the experts was properly excluded. Motey v. Pickle Marble & Granite Co., 20 C. C. A. 366, 370, 74 Fed. 155, 159; W. J. Lemp Brewing Co. v. Ort, 113 Fed. 482, 483, 51 C. C. A. 317; Ft. Pitt Gas. Co. v. Evansville Contract Co., 123 Fed. 63, 64, 59 C. C. A. 281; Mississippi River Logging Co. v. Schneider, 20 C. C. A. 390, 396, 74 Fed. 195.

Counsel assert that, while the court rejected the opinions of witnesses offered by the plaintiff below, it received the opinion of one of the witnesses for the defendant, in that it permitted him to testify that, if there was only a normal demand for timber underground, only four men would be set at work prior to the last of January doing all the labor connected with lowering down the timber in either or both shafts No. 2 and No. 3; but this charge is not sustained by the record. When the entire testimony of this witness is read and the statement challenged is considered in connection with the questions and answers which preceded it, the fact clearly appears that the meaning which this evidence must have conveyed to the jury was not that four men ought, in the opinion of the witness, to have been employed, but that four men were actually employed at the time and under the circumstances mentioned. The testimony was rightly received.

After the defendant had proved that the general conditions relative to the tripod and the drum were the same at defendant's shaft No. 3 as at shaft No. 2, where the accident happened, and that two men had ordinarily operated the drum and lowered the timber with it at the former shaft, a witness was permitted to testify over the objection of the plaintiff that it did not appear that the place for getting the timber down into the shaft was the same at No. 3 as at No. 2, that no accident had ever occurred at shaft No. 3 while two men were operating the apparatus. But this was competent testimony, because the real issue was whether or not the signal to apply the brake and remove the crank could be safely given at the proper time when two men were operating the drum, and that issue was conditioned by the tripod, the drum, the brake, the cranks, the rope, the pulley, and the chain rather than by the particular place where the load happened to lay before it was swung into the shaft.

Finally, complaint is made that the court permitted the defendant to prove that prior to this accident machines which were in principle, in method of operation, and in construction practically identical with that used by the defendant at shaft No. 2 had been, and at that time

Digitized by Google

were, commonly used by mine owners and their workmen in the mines in the vicinity of the defendant's mine, for the purpose of lowering timber into the shafts, and that ordinarily two men operated them. It is said that this testimony was inadmissible because the defendant failed to prove that the particular places on the sides of the shafts where the respective loads lay before they were lowered into the shafts were in the same condition as was that upon which Laurila's load was placed. But this was not an insuperable objection to the evidence, for the conditions of the places where such loads are placed necessarily vary with the times, the seasons and the locations of the shafts, and these places were not determinative of the question whether or not the employment of two rather than three men to operate shaft No. 2 was a failure to discharge the defendant's duty to exercise reasonable care to employ a sufficient number of men to operate it with reasonable safety.

There are cases in which the act or omission at issue is in itself so clearly negligent that the fact that other persons in the same or like circumstances have been guilty of it is insufficient to modify its character or effect. Dawson v. Chicago, R. I. & P. Ry. Co., 52 C. C. A. 286, 288, 114 Fed. 870, 872; Gilbert v. Burlington, C. R. & N. Ry. Co., 63 C. C. A. 27, 32, 128 Fed. 529, 534. The defendant's act or omission was not of that character; and in such a case the true test of actionable negligence is the degree of care which persons of ordinary intelligence and prudence commonly exercise under the same circumstances. If in a given case the care exercised rises to or above that standard, there is no actionable negligence; if it falls below it there is. Hence, in an action for damages for negligence, evidence of the ordinary practice and of the uniform custom, if any, of such persons in the performance under similar circumstances of acts like those which are alleged to have been negligently done is generally competent evidence, for it presents to the jury the correct standard for their determination of the issue whether or not the defendant was guilty as charged. Grand Trunk Ry. Co. v. Ives, 144 U. S. 408, 416, 417, 12 Sup. Ct. 679, 36 L. Ed. 485; Union Pac. Ry. Co. v. Daniels, 152 U. S. 684, 691, 14 Sup. Ct. 756, 38 L. Ed. 597; Washington, etc., Ry. Co. v. McDade, 135 U. S. 554, 569, 10 Sup. Ct. 1044, 34 L. Ed. 235; Texas & Pac. R. Co. v. Barrett, 166 U. S. 617, 619, 620, 17 Sup. Ct. 707, 41 L. Ed. 1136; Choctaw, etc., R. Co. v. McDade, 191 U. S. 64, 67, 24 Sup. Ct. 24, 48 L. Ed. 96; Charnock v. Texas & Pac. R. Co., 194 U. S. 432, 437, 24 Sup. Ct. 671, 48 L. Ed. 1057; Chicago Great Western Ry. Co. v. Egan, 86 C. C. A. 230, 159 Fed. 40.

There was therefore no error in the admission of this evidence, and the judgment below is affirmed.

Digitized by Google

(160 Fed. 896.)

FAIRBANKS, MORSE & CO. v. WALKER.

(Circuit Court of Appeals, Eighth Circuit. March 27, 1908.)

No. 2,611.

1. MASTER AND SERVANT—INJURY TO SERVANT—NEGLIGENCE—INSUFFICIENT HELP.

Plaintiff and two others engaged in taking down certain machinery were ordered by their foreman to roll a five-inch rim fly wheel, weighing between 1,800 and 2,200 pounds, to a point where it could be hoisted from a basement. Plaintiff and his fellow workmen were intelligent, and made no complaint that the number of men allotted was insufficient to do the work, but proceeded to roll the wheel on the concrete floor until the wheel encountered the raised surface of a water pipe partially buried in the floor, when the lower part of the wheel slid laterally along the pipe and fell on plaintiff's leg, causing the injuries complained of. The surface of the floor was exposed when they began work, and the partially buried pipe was plainly observable until it was covered with water and grease that came from the machine they were dismantling. *Held*, that the neglect of plaintiff and his fellow servants rather than the lack of sufficient men to perform the work, was the proximate cause of his injury, and that defendant was not negligent in failing to provide a sufficient number of workmen.

[Ed. Note.—For cases in point, see Cent. Dig. vol. 34, Master and Servant, §§ 162, 257-263.]

2. SAME—DUTIES—PERFORMANCE—PRESUMPTIONS.

While employés are entitled to rely on the performance by the employer of his positive duties to them, the employer is also entitled to presume that the employés will exercise ordinary care in doing their work; neither being required to anticipate or make provision for the other's default.

[Ed. Note.—For cases in point, see Cent. Dig. vol. 34, Master and Servant, §§ 135-142.]

3. SAME—SAFE PLACE TO WORK.

Where defendant was engaged in taking down and removing machinery from premises which did not belong to it, and such work was not usually performed there, the ordinary rule as to an employer's duty to furnish a safe place to work did not apply as between defendant and its servants engaged in such work.

[Ed. Note.—For cases in point, see Cent. Dig. vol. 34, Master and Servant, §§ 171-174, 193.]

In Error to the Circuit Court of the United States for the Eastern District of Missouri.

Albert Walker sued Fairbanks, Morse & Co., a corporation, for damages for personal injuries sustained in its service. The negligence charged was that defendant failed to provide a sufficient number of workmen to do the work in which plaintiff was engaged when injured. It was averred that the service reasonably required "the active work of at least four men or more." The defense was a general denial, contributory negligence, and assumption of the risk. The facts were these: The defendant sent four men, including the plaintiff and a foreman, to remove an engine from the basement of a building. The engine was dismantled, and one of the fly wheels and other parts were moved across the engine room and hoisted out by means of block and tackle. In all this work the plaintiff participated. The accident occurred while plaintiff and two of the men were enaged in rolling the second fly wheel over the basement floor to the point of hoist. The foreman having directed them to move the wheel over went to the floor above to get the block and

Digitized by Google

tackle ready. The wheel was six feet in diameter, had a five-inch rim, and weighed from 1,800 to 2,200 pounds. It stood upright when the men started to move it. The plaintiff was at one end and walked backward as the wheel rolled, another man was at the other end and walked forward, while the third walked at the side of the wheel grasping the spokes to steady it. When they were rolling it, the wheel encountered the raised surface of a water pipe partly buried in the concrete floor, the lower part slid laterally along the pipe, and plaintiff and one or both of his associates moved to the falling side and tried to support it but were unable to do so. Plaintiff was then so near another engine in motion he could not escape and the wheel fell on his leg. The pipe was concealed by water and grease which came from machinery dismantled by them, but the plaintiff had been about the basement for a day and a half prior to the accident and during part of the time the floor was not in that condition and the pipe was visible. The plaintiff was 26 years of age, and had several months' experience in repairing, taking down, and erecting engines, though none in handling a wheel as large as the one in question. He made no complaint about the number of men allotted to the task and heard none from the others. The conversations of the others on that subject are not material to the case. When the foreman before going above to fix the block and tackle directed them to move the wheel, defendant made no response, but set about the work. It was easy for the three to perform the duty assigned them, and it could have been done successfully had it not been for the exposed pipe. A motion of defendant at the close of the evidence for a directed verdict was denied. The plaintiff obtained a verdict upon which judgment was rendered.

William R. Gentry (Millard F. Watts and John E. McKeighan, on the brief), for plaintiff in error.

John M. Goodwin (Vincent McShane, on the brief), for defendant in error.

Before SANBORN, HOOK, and ADAMS, Circuit Judges.

HOOK, Circuit Judge (after stating the facts as above). The movement of the wheel in connection with which the accident occurred involved ordinary manual labor, the dangers incident to which were open and obvious. With knowledge that three men were assigned to the task the plaintiff, who was an intelligent workman, engaged in it without complaint or objection. That three men could easily roll the wheel across the floor if unobstructed was plain to a man of his experience. It was equally plain that it might escape their control if run against an obstruction, and that, if it escaped their control, it would fall. The surface of the concrete floor over which they rolled the wheel was exposed when they began work, and the partly buried pipe on which the wheel slid was plainly observable until it was covered with the water and grease that came from the machinery they themselves dismantled. This was a condition that should have been provided against by plaintiff and his associates in the exercise of ordinary care, but they seem to have paid no attention to it. The accident was the result of their neglect rather than the lack of men to perform the service. The number of men furnished being reasonably sufficient to do the work in safety if they exercised ordinary care in doing it, defendant was under no obligation to furnish more. Just as employés may rely upon the performance by the employer of his positive duties to them, so may he rely upon their exercise of ordinary care in doing their work and neither is required to anticipate and make provision for the other's default.

Digitized by Google

In respect of the controlling principles the case is quite similar to Gust Lake, Adm'r, v. Shenango Furnace Co. (decided at this term) 160 Fed. 887, 88 C. C. A. 69.

It may be further observed that the premises did not belong to defendant, and the work of taking down and removing machinery was not that usually performed there. The ordinary rule as to the duty of an employer in respect of the safety of the place where his work is being done does not apply. Westinghouse, Church, Kerr & Co. v. Callaghan, 83 C. C. A. 669, 155 Fed. 397; American Bridge Co. v. Seeds, 75 C. C. A. 407, 144 Fed. 605. In view of the conclusion reached, it is immaterial whether the foreman is to be regarded as a fellow servant or as a vice principal; nor is it necessary to consider the complaints as to the admission of evidence and the instructions.

The judgment is reversed, and the cause remanded for a new trial.

(160 Fed. 898.)

GRAND TRUNK WESTERN RY. CO. v. REDDICK.

(Circuit Court of Appeals, Seventh Circuit. January 14, 1908. Rehearing Denied May 6, 1908.)

No. 1,389.

1. COURTS—JURISDICTION OF CIRCUIT COURT OF APPEALS—JURISDICTIONAL QUESTIONS.

   Where a judgment of a Circuit Court is taken by writ of error to the Circuit Court of Appeals for review on the merits, that court may certify the question of the jurisdiction of the Circuit Court to the Supreme Court for decision, or it may itself determine such question.

2. SAME—FAILURE TO ALLEGE JURISDICTIONAL FACTS—EFFECT OF ADMISSIONS ON TRIAL.

   An admission made on the trial of an action in the Circuit Court of "the liability of defendant in this case and everything as alleged except the measure of damages" does not cure the omission of the declaration to allege facts giving the court jurisdiction.

   [Ed. Note.—For cases in point, see Cent. Dig. vol. 13, Courts, § 816.]

3. DEATH—ACTION—DAMAGES—EVIDENCE.

   Upon the question of the damages sustained by the wife and children of a person killed by reason of his death, it was not error to permit the health, character, and earning capacity of the deceased to be shown for the period extending back from the time of his death to his young manhood; and in such connection evidence showing his earnings during the time of a partnership formed for carrying on his trade as a skilled workman 15 years before his death was admissible.

   [Ed. Note.—For cases in point, see Cent. Dig. vol. 15, Death, § 88.]

4. WITNESSES—CROSS-EXAMINATION—LIMITATION TO SUBJECT OF DIRECT EXAMINATION.

   The sustaining of an objection to a question asked on cross-examination of a witness, relating to a matter gone into only on such cross-examination, *held* not error.

   [Ed. Note.—For cases in point, see Cent. Dig. vol. 50, Witnesses, §§ 949–954.]

5. APPEAL AND ERROR—REVERSAL—REMAND TO TRY QUESTION OF JURISDICTION.

   Where a cause has been properly tried on the merits in a Circuit Court and a judgment rendered for plaintiff, on a reversal because of the fail-

Digitized by Google

ure of the declaration to allege the requisite diversity of citizenship between the parties to give the court jurisdiction, it is competent for the appellate court to remand with leave to permit an amendment, and to try the question of jurisdiction alone, if issue is taken thereon according to the practice with respect to pleas in abatement.

In Error to the Circuit Court of the United States for the Eastern Division of the Northern District of Illinois.

Leiferman was killed in an accident in Illinois on the railroad of plaintiff in error, defendant below. Suit by Reddick, as administrator, was begun in the court below and prosecuted to judgment. The only rulings of the court that are challenged in the assignments of error concern the admissibility of evidence. Reversal is also sought on the further grounds that the verdict of $10,000 is larger than the evidence warranted the jury in returning, and that the record fails to show that the citizenship of the parties was of the requisite diversity.

George W. Kretzinger, for plaintiff in error.

Oliver R. Barrett, for defendant in error.

Before BAKER, SEAMAN, and KOHLSAAT, Circuit Judges.

BAKER, Circuit Judge. The declaration is wanting in proper averments respecting the citizenship of the parties, and defendant contends that the record nowhere supplies the omission. Preliminarily it is necessary to consider plaintiff's insistence that we lack the power to determine the question of the Circuit Court's jurisdiction.

The subject-matter of this suit was not governed nor affected by federal law, and so, if jurisdiction existed, it rested wholly on diversity of citizenship. In cases of this character, if the defeated defendant is content to rest his writ of error upon the question of the Circuit Court's jurisdiction, he may go directly to the Supreme Court with that question alone. But he cannot present the merits of the controversy to the Supreme Court for review, because the Courts of Appeals are given exclusive and final jurisdiction of the writ of error in that respect. Sections 5, 6, Act March 3, 1891, c. 517, 26 Stat. 827 (U. S. Comp. St. 1901, p. 549). "The general intention of the act was to distribute the appellate jurisdiction and to permit an appeal to only one court." Huguley Co. v. Galeton Mills, 184 U. S. 290, 295, 22 Sup. Ct. 452, 454, 46 L. Ed. 546. Conceding that the record has been properly brought here, plaintiff puts his denial of our right to decide the jurisdictional question which is presented by this record (and which inheres, whether raised or not, in every record) upon his contention that the Supreme Court has construed our power to deal with the question as being limited to certifying it to that court. The contention, which is supported by decisions of the Court of Appeals for the Second Circuit (Sun Ptg. Ass'n v. Edwards, 121 Fed. 826, 58 C. C. A. 162; Boston, etc., R. Co. v. Gokey, 149 Fed. 42, 79 C. C. A. 64), finds its ultimate base in what appears to us to be a mistaken interpretation of the following quotation from McLish v. Roff, 141 U. S. 661, 669, 12 Sup. Ct. 118, 120, 35 L. Ed. 893:

"When that judgment is rendered, the party against whom it is rendered must elect whether he will take his writ of error or appeal to the Supreme

Digitized by Google

Court upon the question of jurisdiction alone, or to the Circuit Court of Appeals upon the whole case. If the latter, then the Circuit Court of Appeals may, if it deem proper, certify the question of jurisdiction to this court."

Clearly the contention comes to this: The power to certify excludes the power to decide. But whence comes, and what is the nature of, the power to certify? Beyond doubt this court has only the powers that are expressly conferred by the organic act and its supplements. One of the provisions of section 6 is that:

"In every subject within its appellate jurisdiction the Circuit Court of Appeals at any time may certify to the Supreme Court of the United States any questions or propositions of law concerning which it desires the instruction of that court for its proper decision."

The decision, the adjudication between the parties, must come from the Court of Appeals. The Supreme Court in such a matter limits its pronouncement to answering the certified questions, so that the Court of Appeals in the light of that instruction may properly decide what it had authority to decide without advice. This, it seems to us, is the reason of a matter that should also be taken to have been settled by authority when the Supreme Court said:

"The power to certify assumes the power to decide." American Sugar Co. v. New Orleans, 181 U. S. 277, 282, 21 Sup. Ct. 646, 648, 45 L. Ed. 859.

The omissions of the declaration are supplied, so plaintiff claims, by the following admission made at the trial:

"Counsel for defendant admit the liability of defendant in this case and everything as alleged, except the measure of damages."

The claim is that the defendant could not be liable "in this case" unless the Circuit Court had jurisdiction. This seems to us a mere verbal catch. For the purpose of shortening the trial, the defendant admitted the cause of action as alleged. The merits of a case is a matter quite apart from the court's jurisdiction. The fair meaning, we believe, is that the defendant admitted the truth of all the allegations of the declaration except those concerning damages.

Over defendant's objection a witness was permitted to say that 15 years ago he and the deceased were in partnership, and to state what the deceased's earnings then were. Deceased was a designer in lithography, and such was the business of the partnership. Of course, the question was: What pecuniary loss did the widow and four children suffer by the death of husband and father? The health and character and earning capacity of deceased were traced from his death at 48 years of age back to his young manhood. The partnership and deceased's earnings therein were included in the story. We think the whole of it was relevant to the question of damages, and that it was within the court's discretion to permit deceased's life history to be carried back to the extent stated.

On cross-examination of one of plaintiff's witnesses defendant brought out the fact that deceased had bought a house and two lots about 14 years before his death. "Q. Did he pay for it all at one time? A. He did not. Q. Did you say he did not pay for it at the time he bought it?" The court did not permit the defendant to

Digitized by Google

have an answer to the last question. If the ruling is to be taken for more than a disapproval of the bad habit of repeating a witness's answer in the form of a question, it was not erroneous. The subject-matter of the question was not gone into on direct examination, and we fail to perceive how any possible answer would have tended to deny or discredit the testimony in relation to damages.

Nothing in the record indicates that the jury were swayed by passion or prejudice. Deceased was 48 years old, in perfect health, a good provider, a skilled workman, with an expectancy of 19 years, turning $30 a week over to his wife for the support of the family.

The trial was free from error throughout. But the judgment must be reversed on account of plaintiff's omission respecting citizenship. A question remains. How far ought the proceedings to be opened up? Defendant confessed the cause of action. The damages were properly proved and assessed. The justice of the matter is that plaintiff should not be required to go through another trial unless that course is unavoidable. Jurisdiction and merits are separate questions, and may properly be determined separately. Want of jurisdiction, by the very nature of the question, is merely a matter of abatement. If plaintiff had averred that he was a citizen of Illinois and defendant a corporation organized and existing under the laws of Michigan, and if defendant could honestly have challenged those allegations or either of them, the issue could have been determined in advance of a trial on the merits. We see no just reason why, after a trial on the merits, the logically separable matter of jurisdiction should not be determined. Fitchburg R. Co. v. Nichols, 85 Fed. 869, 29 C. C. A. 464; Watson v. Bonfils, 116 Fed. 157, 53 C. C. A. 535; Everhart v. Huntsville College, 120 U. S. 223, 7 Sup. Ct. 555, 30 L. Ed. 623; Menard v. Goggan, 121 U. S. 253, 7 Sup. Ct. 873, 30 L. Ed. 914. If, after plaintiff amends, the jurisdictional averments should be denied, the issue may be tried according to the practice with respect to pleas in abatement.

The judgment is reversed, with the direction to proceed in conformity with this opinion.

(160 Fed. 901.)

JOHANSON v. WHITE.

(Circuit Court of Appeals, Ninth Circuit. February 3, 1908.)

No. 1,459.

MINES AND MINERALS—CLAIMS—PRIORITY OF RIGHTS.

If plaintiff's location of a placer mining claim on May 25th, unaccompanied by discovery at the time, gave him no right to return June 9th, after an absence to procure supplies, etc., and after defendant had made due location of the claim and taken possession for the purpose of exploration, defendant's remedy was to protect his possession against plaintiff's entry; and, plaintiff having re-entered peaceably and both being in possession by common consent after June 8th, it became a race of diligence between them to discover gold, and he who first discovered it obtained the prior right. His discovery did not relate back to the date of his location; but his location was made valid by discovery, and took effect from that date, and it gave him the full right to the claim, to the exclusion of all others.

Digitized by Google

In Error to the District Court of the United States for the Third Division of the District of Alaska.

In the court below, on the trial of an action in ejectment brought by the plaintiff in error against the defendant in error to recover the possession of a placer mining claim, evidence was introduced to show that on the morning of May 25, 1905, the plaintiff in error located and staked the claim in controversy, and thereafter departed to get supplies and necessary equipment to proceed with the development work, and on returning on June 9, 1905, found the defendant in error in possession; the latter having in the meantime located and staked the claim. It was proven that the plaintiff in error, on returning to the mining claim, entered peaceably upon the same, built a cabin thereon, and proceeded to sink a shaft. During the same time the defendant in error remained on the claim, living in a tent thereon, and was engaged likewise in sinking a shaft. The plaintiff in error, on reaching gravel, found sufficient gold therein to warrant him in the further expenditure of time and money in the development of the claim, and immediately proceeded to bring the present action. The defendant in error made a discovery of gold at a date subsequent to the discovery of the plaintiff in error. Upon this evidence the court, at the close of the testimony, instructed the jury to return a verdict for the defendant in error, "for the reason that the testimony in the case, which is admitted and which is not controverted, shows that the defendant in this action took possession of this mining property on the 8th day of June, 1905, and upon the 8th or 9th day of June, 1905, marked the boundaries of the claim by posting out corner stakes, and that he entered into the possession of the property and has remained in the actual possession of it ever since that time, and that upon the 11th or 12th day of June, when defendant was in actual possession of it, and working it for the purpose of making a discovery of gold, or to ascertain whether or not gold was in the claim, the plaintiff here, without any right, and without having any title whatever to the property, entered upon it and trespassed upon the rights of the defendant."

Bion A. Dodge and T. C. West (F. De Journel, of counsel), for plaintiff in error.

John L. McGinn and Martin L. Sullivan (J. C. Campbell, W. H. Metson, C. H. Oatman, F. C. Drew, and J. A. MacKenzie, of counsel), for defendant in error.

Before GILBERT, ROSS, and MORROW, Circuit Judges.

GILBERT, Circuit Judge (after stating the facts as above). The court, in charging the jury to return a verdict for the defendant in error, evidently regarded the case as one falling within the rule, expressed in numerous decisions, that one who in good faith makes his location, remains in possession, and with due diligence proceeds to make discovery, is fully protected against all forms of forcible, fraudulent, surreptitious, or clandestine entries or intrusions upon his possession. It may be conceded that the rule would be applicable here, if the entry and possession of the plaintiff in error were of the character so described. But there is nothing in the evidence to show that the plaintiff in error entered into possession secretly, or by force or fraud, or that the defendant in error took any steps to protect his possession. It is not denied that the latter told the former that he "could go ahead and work," but it would be at his own risk. Conceding, for the purposes of this case, that the location made by the plaintiff in error on May 25, 1905, unaccompanied by discovery at the time, gave to him no right subsequently to return and take pos-

Digitized by Google

session of the claim after another had made due location thereof and taken possession for the purpose of exploration, the remedy of the latter was to protect his possession against the entry of the former. Both the locaters being in possession by common consent, as they were after June 8th, it became a race of diligence between them to discover gold, and he who first discovered it undoubtedly obtained the prior right. His discovery did not relate back to the date of his location; but his location was made valid by discovery, and took effect from that date, and it gave him the full right in the claim, to the exclusion of all others. This is well established by the authorities. Lindley on Mines (2d Ed.) § 216; Horswell v. Ruiz, 67 Cal. 111, 7 Pac. 197; Garthe v. Hart, 73 Cal. 541, 15 Pac. 93; Gemmell v. Swain, 28 Mont. 331, 72 Pac. 662, 98 Am. St. Rep. 570; Belk v. Meagher, 104 U. S. 279, 26 L. Ed. 735; Crossman v. Pendery (C. C.) 8 Fed. 693. In the case last cited, Miller, Justice, said:

"It is the opinion of the court that, inasmuch as the plaintiffs allowed the defendants to enter upon their claim and within their boundaries and there sink a shaft, in which they discovered mineral in rock in place before a discovery by plaintiffs, and make location thereof, without protest, the defendants now have the better right. But the plaintiffs might have protected their actual possession of their entire claim by proper legal proceeding prior to the discovery of mineral by the defendants, or by either party. A prospector on the public mineral domain may protect himself in the possession of his pedis possessionis while he is searching for mineral. His possession so held is good as a possessory title against all the world, except the government of the United States. But, if he stands by and allows others to enter upon his claim and first discover mineral in rock in place, the law gives such first discoverer a title to the mineral so first discovered, against which the mere possession of the surface cannot prevail."

In the light of these authorities it was error to instruct the jury to return a verdict for the defendant in error.

The judgment is reversed, and the cause is remanded for a new trial.

(160 Fed. 903.)

In re L. RUDNICK & CO.

(Circuit Court of Appeals, Second Circuit. March 10, 1908.)

No. 184.

1. BANKRUPTCY—RIGHT TO PROPERTY—REPLEVIN—STAY—BANKRUPTCY JURISDICTION.

Where a sheriff took possession of certain personal property under a replevin writ, in an action pending in a state court prior to the filing of a bankruptcy petition against the defendant, plaintiff in such replevin suit claiming title on the ground that the property was purchased by means of the bankrupt's fraudulent representations, the bankruptcy court had no jurisdiction by a summary order to compel the sheriff to deliver the property to a receiver in bankruptcy, under Bankr. Act July 1, 1898, c. 541, § 67f, 30 Stat. 565 [U. S. Comp. St. 1901, p. 3450], invalidating levies, judgments, attachments, and liens obtained within four months against a person who is insolvent, and providing that the property so affected shall pass to the trustee, as such section only applies to property of the bankrupt.

2. REPLEVIN—REQUISITION—DISTINCTION FROM ATTACHMENT.

The distinction between a requisition in replevin and a lien created by an attachment levy is that the former deals primarily with the property of the plaintiff in replevin, and the latter with the property of the debtor.

Digitized by Google

Petition to Review Order of the District Court of the United States for the Southern District of New York, in Bankruptcy.

For opinion below, see 158 Fed. 223.

On petition to review an order directing the sheriff of New York county to deliver to the receiver in bankruptcy merchandise seized by said sheriff by virtue of a writ of replevin in an action duly commenced in the City Court of New York wherein Simon and Lewis Brinn (the petitioners for review herein) were plaintiffs and the bankrupt was defendant.

Alexander S. Marcuson and Samuel J. Rawak, for petitioners.

Stern, Singer & Barr (E. W. Tyler and Henry B. Singer, of counsel), for receiver.

Before LACOMBE, COXE, and WARD, Circuit Judges.

COXE, Circuit Judge. Prior to the proceedings in bankruptcy the petitioners herein commenced an action of replevin in the City Court of New York against L. Rudnick & Co., a corporation, alleging that they were the owners of property, described in a schedule annexed to the complaint, which was unlawfully taken and detained by the defendant, demand for its return having been made and refused. An undertaking in double the value of the property, approved by the sheriff, was given, the sureties agreeing to be responsible for the return of the property if the plaintiffs failed in establishing title to the same. In short, the property in question had been taken April 19, 1907, and was in the control of a court having jurisdiction prior to the filing of the petition in bankruptcy, which was on the following day, April 20, 1907.

It is undisputed that the replevin suit complied in all respects with the provisions of the New York Code and that the question of ownership of the property can be fully tried and determined in that action. On the 6th of May, 1907, upon petition of the receiver in bankruptcy and after hearing on said petition, the district court directed the sheriff of the county of New York to deliver the property taken by him to the receiver in bankruptcy. We are therefore confronted squarely with the question: Where the sheriff in an action pending in a state court holds property in replevin taken by him prior to bankruptcy proceedings under claim of ownership, has the district court jurisdiction by summary order to compel the sheriff to deliver the property to a receiver appointed by said District Court? It is contended on behalf of the receiver that the sheriff seized property not included in the requisition and in excess of the amount necessary to satisfy the plaintiff's claim; but the question thus suggested is not before us for determination. The order directs the delivery to the receiver of all the property taken, without distinction or qualification, and it is this order that is the subject of review. If the court in bankruptcy, after investigation, had directed certain designated property of the bankrupt not sold to it by the plaintiffs in replevin, or property in excess of their demand, to be delivered to the receiver, a different question might be presented.

It is also argued for the receiver that the affidavits presented by him tend to show that the property belonged to the bankrupt. The plaintiffs in replevin, on the contrary, allege that they were induced to sell

Digitized by Google

the property to the bankrupt by false and fraudulent representations and that the title never passed. These allegations of fraud are not denied by the bankrupt. It is obvious, therefore, that the question of the title to the goods is one of fact, which can be fully determined in the pending action, and if the bankrupt's successor in interest (the receiver or trustee) can prove his contention, he will be entitled to the return of the goods or their value.

The argument of convenience and expediency is not properly before us, but it cannot be denied that a question which involves the title to property can, to say the least, be determined as well in a plenary suit, where witnesses are seen, examined and cross-examined, as in a summary proceeding based solely upon affidavits. There is no form of action known to the common law in which the rights of both parties can be safeguarded so thoroughly as in an action of replevin. The jurisdiction of the District Court is purely statutory and unless the bankruptcy act permits the taking of property from a state official holding it under process duly issued, the right to do so cannot be maintained.

It is contended that section 67f of the act (Act July 1, 1898, c. 541, 30 Stat. 565 [U. S. Comp. St. 1901, p. 3450]), invalidating levies, judgments, attachments and liens obtained within four months against a person who is insolvent and providing that the property so affected shall pass to the trustee as part of the estate of the bankrupt, vests the necessary power in the District Court. We cannot accede to this view. It is manifest that the section in question deals with the property of the bankrupt. Assuming that Congress might lawfully pass a law requiring the property of third parties, found in the possession of the bankrupt, to be turned over to his trustee as part of his estate; it is sufficient for the purposes of this review that Congress has not done so in the present act. If A. leaves his coat with B. to be repaired and B. refuses to return it, A. can reclaim it in an action of replevin, and the status of that suit is not affected by the fact that B. subsequently becomes a bankrupt. The mere assertion by B. of ownership in the coat does not oust the court of jurisdiction and transfer the controversy to the bankruptcy court. It presents a question of fact merely, to be tried in the court first obtaining possession of the property.

The distinction between a requisition in replevin and a lien created by levy or attachment is that the former deals primarily with the property of the plaintiff in replevin and the latter with the property of the bankrupt. It is of no moment that the title is in dispute. This is true in every contested replevin suit, and it is this question which the court must determine before judgment can be rendered. In the case of Russell and Birkett, 101 Fed. 248, 41 C. C. A. 323, decided April 3, 1900, this court early recognized as applicable to the bankruptcy act of 1898 the general principle that where a court of competent jurisdiction duly obtains possession of property, the title to which is in dispute, it is entitled to retain possession and no other court can lawfully interfere. The court said:

"When property is in the actual possession of a court this draws to it the right to decide upon conflicting claims to its ultimate possession and control (Rouse v. Letcher, 156 U. S. 47, 49, 15 Sup. Ct. 266, 267, 39 L. Ed. 341), and as between two courts exercising concurrent jurisdiction, the court which

Digitized by Google

first acquires possession will maintain its possession intact. * * * A federal court will neither interfere with property in the lawful custody of a state court, nor tolerate interference by a state court with property in its custody. Summers v. White, 36 U. S. App. 395, 71 Fed. 106, 17 C. C. A. 631; Louisville Trust Co. v. City of Cincinnati, 47 U. S. App. 36, 76 Fed. 296, 22 C. C. A. 334."

This view is sustained by the following authorities: Metcalf v. Barker, 187 U. S. 165, 23 Sup. Ct. 67, 47 L. Ed. 122; Louisville Trust Co. v. Comingor, 184 U. S. 18, 22 Sup. Ct. 293, 46 L. Ed. 413; Jaquith v. Rowley, 188 U. S. 620, 23 Sup. Ct. 369, 47 L. Ed. 620; In re Baudouine, 101 Fed. 574, 41 C. C. A. 318.

The order of the District Court is reversed.

(160 Fed. 906.)

THE GRACE DOLLAR.

(Circuit Court of Appeals, Ninth Circuit. February 3, 1908.)

No. 1,461.

SEAMEN—RIGHT TO WAGES—DESERTION—CONSTRUCTION OF SHIPPING ARTICLES.

Libelants signed shipping articles for a voyage "from the port of San Francisco, Cal., to Portland, Or., and other Columbia river ports, and return to San Francisco for final discharge, either direct, or via one or more ports on the Pacific coast, north or south of the port of discharge, as the master may direct, voyage not to exceed six calendar months." The vessel proceeded to Portland, where she took on a cargo of lumber for Los Angeles, and after its discharge proceeded north, past San Francisco, to Gray's Harbor for another cargo of lumber for San Francisco. *Held*, that she did not deviate from the stipulated voyage, and that, in leaving the vessel at Gray's Harbor against the master's protest and after having served only 26 days, libelants were deserters and forfeited their right to wages.

[Ed. Note.—For cases in point, see Cent. Dig. vol. 43, Seamen, §§ 104, 106.]

Appeal from the District Court of the United States for the Western Division of the Western District of Washington.

For opinion below, see 149 Fed. 793.

Marquis & Shields and H. W. Hutton, for appellants.

Nathan H. Frank and Walter D. Mansfield, for appellee.

Before GILBERT, ROSS, and MORROW, Circuit Judges.

GILBERT, Circuit Judge. The appeal in this case is from a decree of the District Court in which the libel of the appellants to recover wages as seamen was dismissed on the ground that the wages were forfeited by an abandonment of the voyage before its conclusion. On or about May 10, 1906, the appellants shipped for a voyage on the steamer Grace Dollar. Seven of them signed as able seamen, three as firemen, one as cook, one as waiter, and one as second mate. The shipping articles described the voyage as follows:

"From the port of San Francisco, Cal., to Portland, Or., and other Columbia river ports, and return to San Francisco for final discharge, either direct or via one or more ports on the Pacific coast, north or south of the port of discharge, as the master may direct; voyage not to exceed six calendar months."

Digitized by Google

On or about May 11, 1906, the vessel, with her master and crew, went from San Francisco to Portland, where she took on board a load of lumber. Thence she proceeded southward to Los Angeles. There the cargo was discharged. Thence she went northward, past the port of San Francisco, to Aberdeen, in Gray's Harbor, in the state of Washington, arriving there on June 5, 1906. At that port the seven sailors claimed that their contract had been completed, and they went ashore after the master had informed them that, if they did so, they would be considered deserters. Later in the same day, on the instructions of an agent of the Sailors' Union, the three firemen, the cook, and the waiter quit the vessel, and on the following day the second mate did likewise. The master refused to pay any of said crew their earned and unpaid wages, on the ground that they had deserted the ship without just or reasonable cause before their term of service had expired, or the voyage for which they had signed had been completed.

The sole question involved is whether or not there was such deviation from the voyage as to justify the libelants in abandoning the ship. The statute requires that the shipping articles set forth "the nature and so far as practicable the duration of the intended voyage or engagement, and the port or country at which the voyage is to terminate." This is one of the many provisions that have been enacted for the protection of seamen, who are regarded as the wards of the nation. Its object is to prevent the entrapping of seamen into a voyage of greater length or of more peril or labor than that which they have assented to and for which they ought to receive increased wages. Such a statute should receive a reasonable construction. Obviously, it is important that the mariner shall be informed in a general way of the general course of the voyage, but the essential requisites of the statute are that he shall know the duration of the voyage and the port of his final discharge. The Mermaid, 115 Fed. 13, 52 C. C. A. 607. It is not always feasible to name, at the outset of a voyage, all the ports to which the demands of trade may carry the vessel, and it is not necessary that the seamen be advised of all the operations of the voyage, and especially is this true of a coastwise voyage. To hold otherwise would be to impose burdensome and destructive restrictions on commerce without conferring any substantial benefit on seamen. British legislation on this subject has been influenced by the same protective policy as our own. The English merchant shipping act of 1854 (section 149) provided that the shipping articles should, among other things, set forth "the nature and, so far as practicable, the duration of the intended voyage or engagement." But in 1873 the section was so amended that the agreement, instead of stating the nature and duration of the intended voyage or engagement, may "state the maximum period of the voyage or engagement, and the places or ports of the world (if any) to which the voyage or engagement is not to extend." In The Moslem, Olc. 289, Fed. Cas. No. 9,875, it was said:

"A change of voyage which may discharge mariners from the obligation of their contract must be willfully made by the master and enforced against their consent or acquiescence."

Digitized by Google

By the shipping articles in the present case the crew consented that, after loading at Portland, the vessel might go to other ports on the Pacific Coast, either north or south of San Francisco, or both, within the prescribed six months, as the master might direct. The vessel was engaged in the lumber trade. The ports of supply were north of San Francisco, and the markets were at San Francisco, or at ports south thereof. The vessel, having loaded at Portland, sailed to Los Angeles and discharged her cargo there. It had not yet touched at a port north of San Francisco, and it proceeded north to obtain another cargo for the purpose of carrying the same to San Francisco, the port of final discharge. We think that this was within the intendment of the articles and that there was no deviation. At the time when the appellants left the vessel, they had served but 26 days of the 6 months specified in the articles. There is nothing in the record to show that on leaving Los Angeles they demanded to be taken to San Francisco, or that they made any objection or protest against going to Gray's Harbor for a cargo. Their first objection appears to have been made after the vessel had been made fast to the wharf at Aberdeen. All that then remained to be performed of the voyage was to load a cargo of lumber and take the same to San Francisco, a service that could not have occupied more than 10 days.

In Magee et al. v. The Moss, Gilp. 219, Fed. Cas. No. 8,944, the voyage described was from Philadelphia to South America, or any other port or ports, backwards and forwards, when and where required, and back to Philadelphia, unless sooner discharged. The ship went to Buenos Ayres, thence to Havana, thence to Marseilles, thence again to a port in South America, and returned to Philadelphia. The court, in holding that a desertion of seamen at the port of Havana was not justifiable, said:

> "It will not do to tie down these contracts, made sometimes in a counting house, and sometimes in the cabin of a ship, to the strict rules of composition. We must endeavor to come at the true meaning of the parties and to give the contract a reasonable construction; to take care to put upon general words a just and reasonable limitation, but not lightly to destroy and avoid the whole contract, because the generality or breadth of the expressions may be in a degree uncertain or might be used to impose an oppressive service. * * * In the present case I can see nothing unreasonable or oppressive in the construction the captain has put upon these articles."

Of similar import is the decision of the same court in Wood et al. v. The Nimrod, Gilp. 83 Fed. Cas. No. 17,959, in which the voyage was described as from the port of New York to Darien, thence to St. Thomas, thence to New Orleans, or as the master may direct, and back to New York, her port of discharge. The vessel sailed from New York to Darien, thence to St. Thomas, thence to Maricaibo, and from there sailed for Philadelphia not going at all to New Orleans. At Philadelphia the seamen deserted. It was held that thereby they forfeited their wages.

The case of The J. M. Griffith (D. C.) 71 Fed. 317, cited by the appellants, involved the construction of shipping articles different from those which are here presented. In that case, the voyage was to be

Digitized by Google

"from the port of San Francisco to Port Hadlock, and thence to San Francisco for final discharge, either direct or via one or more ports of the Pacific coast." There was no express provision for touching at a port south of San Francisco, and there was ground for holding that San Pedro, which lies several hundred miles south of San Francisco, was not a port which could be said to be by way of the route from Port Hadlock, Wash., to San Francisco. In Rury v. McKay (D. C.) 84 Fed. 360, and The Laura Madsen (D. C.) 84 Fed. 362, the courts, we think, went further than authority and sound reason warrant, and we are unable to agree with the conclusions which they reached.

The decree is affirmed.

(160 Fed. 909.)

READER v. HAGGIN.

(Circuit Court of Appeals, Second Circuit. March 10, 1908.)

No. 176.

1. EXCEPTIONS, BILL OF—SETTLEMENT—TIME.

After the expiration of the term at which the cause was tried, the court cannot allow a bill of exceptions nunc pro tunc unless control over the case has been reserved by rule or order.

[Ed. Note.—For cases in point, see Cent. Dig. vol. 21, Exceptions, Bill of, §§ 72½, 73.]

2. APPEAL AND ERROR—REVIEW—OBJECTIONS NOT MADE AT TRIAL.

An objection that plaintiff did not have his day in court in that the case should have been submitted to the jury, and even if a verdict were directed, it should not have been on the merits, was not available on a writ of error, where not made in the trial court.

3. SAME—SCOPE OF REVIEW.

The inquiry of the Circuit Court of Appeals on writ of error must be confined to the pleadings and proof as embodied in a bill of exceptions, and, where the record so made up is free from error, the judgment must be affirmed.

[Ed. Note.—For cases in point, see Cent. Dig. vol. 3, Appeal and Error, § 2867.]

4. SAME—MOTION FOR NEW TRIAL.

The denial of a motion for a new trial presents no question which can be considered by the Circuit Court of Appeals.

[Ed. Note.—For cases in point, see Cent. Dig. vol. 3, Appeal and Error, §§ 3860-3865.]

5. SAME—BILL OF EXCEPTIONS—INSERTION OF EXCEPTION.

A motion that an exception be inserted in a bill of exceptions, where no exception was in fact taken, is addressed to the discretion of the trial judge, and his denial of the motion cannot be reviewed on a writ of error.

[Ed. Note.—For cases in point, see Cent. Dig. vol. 3, Appeal and Error, § 3891.]

In Error to the Circuit Court of the United States for the Southern District of New York.

Dittenhoefer, Gerber & James (A. J. Dittenhoefer and Dudley F. Phelps, Jr., of counsel), for plaintiff in error.

Alexander and Green (Francis L. Wellman and Sumner B. Stiles, of counsel), for defendant in error.

Before LACOMBE, COXE, and NOYES, Circuit Judges.

Digitized by Google

PER CURIAM. The action was brought to recover $250,000 as commissions, under an alleged oral agreement by which the defendant promised to pay the plaintiff 10 per cent. on the price of certain mines in Peru which were purchased by the defendant through the plaintiff as defendant's broker.

The bill of exceptions shows that plaintiff was the only witness. Upon his cross-examination numerous letters, cablegrams, and other documents signed by the plaintiff were produced by the defendant, and the plaintiff was interrogated regarding them. It is unnecessary to characterize these papers further than to say that many of them are quite inconsistent with the theory upon which the action was prosecuted. When the court adjourned on Wednesday, December 19, 1906, the plaintiff was still on the stand with his cross-examination unconcluded. On the assembling of the court on Thursday morning the following proceedings took place.

"The Court: I think we are ready to take up Reader against Haggin. Mr. Stanchfield: In Reader against Haggin the plaintiff rests his case. Mr. Wellman: The defendant rests if your honor please. The defendant now moves for the direction of a verdict on the merits in favor of the defendant. The Court: I think you are entitled to it. Take the verdict Mr. Clerk. By direction of the court the jury returned a verdict for the defendant."

The plaintiff did not ask to submit any question to the jury. This, then, is all that took place on the trial, the plaintiff was examined and partly cross-examined. He then rested his case. The defendant also rested and asked for the direction of a verdict, which was granted. To this action of the court no exception was asked for and none appears in the record. Exceptions were noted to rulings of the court admitting several of the letters heretofore referred to, but they are so manifestly untenable that it is unnecessary to discuss them in detail. The cause was tried at the October term, and no bill of exceptions was signed, filed, or served during that term. The time in which to file a bill of exceptions was not extended by order or otherwise, and the bill was not presented for signature until August 28, 1907, five months after the expiration of the October term, when it was signed nunc pro tunc as of March 30, 1907. This court has repeatedly held that after the expiration of the term at which the cause was tried, unless the court reserves control over the case by rule or order, it is too late to allow a bill of exceptions. If, however, we assume the bill of exceptions to be properly before us, it does not aid the plaintiff for the reason that it is absolutely barren of any exception which would justify a reversal of the judgment. The grievance of which the plaintiff particularly complains is that he did not have his day in court, that the question in dispute should have been submitted to the jury, and, even if a verdict were directed, it should not have been upon the merits. The short and conclusive answer is that the plaintiff made no such contention in the trial court. On the contrary he permitted the verdict to be directed without objection or exception. Our inquiry upon writ of error must be confined to the pleadings and the proof, as embodied in a bill of exceptions, and where the record, so made up, is absolutely free from error the judgment must be affirmed. A reversal in such circumstances would be a gross abuse

Digitized by Google

of power. Although we might end the discussion at this point with propriety, the unusual circumstances attending the direction of the verdict lead us to examine briefly the other contentions advanced by the plaintiff.

No motion for a new trial was made at the trial, but in January thereafter the plaintiff made such a motion, and at the same time moved that an exception might be entered to the direction of the verdict. This motion was denied, and the plaintiff appealed to this court. No rule of practice has been adhered to with greater uniformity than the rule that the denial of a motion for a new trial, even if made at the trial, presents no question which this court can consider. Our latest decision reaffirming this rule was made January 7, 1908. Denison v. Shawmut Mining Co., 159 Fed. 102.* A motion that an exception be inserted in a bill of exceptions is clearly addressed to the discretion of the trial judge, and his denial of the motion presents no question which can be reviewed by this court, and especially so when it is conceded that no exception was in fact taken.

A large part of the record is taken up with the affidavits read on the motion for a new trial, the plaintiff contending that the action of his counsel in submitting to the direction of a verdict for the defendant was without his consent; the defendant contending that the plaintiff not only consented to, but actually directed, the course followed by his counsel. As before stated, these affidavits are wholly irrelevant to any question legitimately before us, and should not have been included in the record. We have, however, examined them, thinking that they might reveal some aspect of the controversy which would enable us to give the plaintiff relief. The affidavits disclose a clear contradiction between the plaintiff and his wife on the one side and two counselors of the circuit court on the other, but present no facts which are of the least avail on this review. It is proper to say that counsel who appear for the plaintiff in error in this court did not appear for him in the court below.

After careful consideration of all the questions presented, we find ourselves powerless to grant a new trial unless we are prepared wholly to disregard the practice which has been uniformly followed since this court was established.

The judgment is affirmed with costs.

(160 Fed. 911.)

THE STANLEY DOLLAR.†

(Circuit Court of Appeals, Ninth Circuit. February 3, 1908.)

No. 1,287.

1. ADMIRALTY—JURISDICTION—MARITIME CONTRACTS — PASSENGER CONTRACTS BINDING VESSEL.

A corporation of Washington contracted with a dock company to bring 600 Japanese laborers from Honolulu to Seattle on respondent steamship, owned by a steamship company, for which the corporation was to pay a stated sum per head for carriage. A Japanese agent of the dock company in Honolulu advertised for laborers and contracted with libelants and

*86 C. C. A. 292. †Rehearing denied June 10, 1908.

Digitized by Google

others to transport them to Seattle, collecting from them a part of the passage money agreed upon, and taking their notes for the balance. A representative of the steamship company went to Honolulu and there received from the agent a portion of the passage money, and issued tickets for carriage to Victoria, B. C., the vessel being of Canadian register and not entitled to carry passengers from there to any United States port. Libelants being unable to read the tickets, which were in English, did not know that they were not to be taken to Seattle until after they had gone on board, but on learning such fact left the vessel, and libeled her for breach of the contracts. *Held*, on evidence showing that the arrangement between the dock company and the steamship company was not a charter but a joint enterprise in the profits of which each was to share, and that the Japanese agent who made the contracts also represented the owner of the vessel, that the contracts were maritime and gave a right of action in admiralty against the ship.

[Ed. Note.—Admiralty jurisdiction as to matters of contract, see notes to The Richard Winslow, 18 C. C. A. 347; Board of Com'rs v. Howard, 27 C. C. A. 530.]

2. CARRIERS—DAMAGES—BREACH OF CONTRACT OF CARRIAGE—SUIT BY PASSENGER.

Libelants were not entitled to recover damages for loss of time after breach of the contracts and while waiting for the trial of the case.

3. ADMIRALTY—COSTS—DOCKET FEE IN CONSOLIDATED CASES.

Where libels against a vessel are similar in character and are consolidated for trial, but one docket fee is taxable for the libelants.

[Ed. Note.—For cases in point, see Cent. Dig. vol. 1, Admiralty, §§ 851, 853.]

Appeal from the District Court of the United States for the Territory of Hawaii.

E. C. Peters, John W. Cathcart, Nathan H. Frank, and Walter D. Mansfield, for appellants.

Charles Page, Edward J. McCutchen, Samuel Knight, and J. J. Dunne, for appellees.

Before GILBERT and ROSS, Circuit Judges.

ROSS, Circuit Judge. The case shows that a Japanese named Kikutake, in the early part of June, 1905, caused to be inserted in certain Japanese newspapers published at Honolulu and circulated in the Islands, an advertisement for laborers to go to Seattle and Tacoma, state of Washington, by a certain steamship called the "Stanley Dollar," to sail June 19th of that year direct to Seattle, stating the wages such laborers would receive, and the fare each was to pay, and further stating that if any such laborer should not be able to pay the full fare, he (Kikutake) would lend him $20 of the amount. In response to that advertisement, each of the 36 appellees, among a large number of other Japanese, contracted with Kikutake for transportation on board the Stanley Dollar from Honolulu to Seattle, at the time paying to Kikutake $20 in money on account of his passage, and executing to Kikutake his promissory note for the balance of the passage money, and receiving from Kikutake a receipt therefor. At this time the ship mentioned was in the waters of the Orient. Prior to her arrival at Honolulu, Mr. Robert Dollar arrived at that place as the representative of the steamship company owning the vessel, and for the purpose, in part, of issuing tickets to the laborers secured by Kikutake by means and

Digitized by Google

in pursuance of the advertisements. After his arrival in Honolulu Dollar and Kikutake had several conferences upon the subject, resulting in the issuance by Dollar to each of the libelants of a ticket printed entirely in English, entitling him to transportation from Honolulu to Victoria, B. C.—Dollar thereupon collecting from Kikutake $14 for each of such tickets. The steamship in question did not reach Honolulu from Yokohama until June 27, 1905, and then it was discovered that she was without a license or certificate to carry passengers. Moreover, she was of Canadian register, and was consequently not entitled to carry passengers from Honolulu to Seattle or any other American port. A survey was made at the instance of the collector of customs at Honolulu, resulting in the making of certain repairs and additions to the equipment of the ship, deemed essential to the granting of a license to her to carry passengers. The day before she was finally ready to sail, which was about midnight of July 15, 1905, the libelants went on board with their baggage, and then for the first time discovered that they were not to be taken by the ship to Seattle, in accordance with their agreement with Kikutake, but to Victoria, in accordance with the tickets which had been issued to them, which tickets they could not read, not understanding any English, and which had not been theretofore explained to them. The appellees thereupon left the ship and filed the libels which were in the court below consolidated, and which formed the basis of the appellees' recovery there.

From the record it seems that a corporation called the "Construction & Maintenance Company" had entered into an agreement with another corporation called the "Commercial Dock Company," doing business at Tacoma, for the transportation by the latter of 600 Japanese in the steerage of the steamship Stanley Dollar, from Honolulu to Victoria, for $26.50 each ($28 to Seattle), to leave Honolulu on or about June 15, 1905, and to arrive at Victoria on or about June 30th, and that Mr. Dollar, before going to Honolulu, had been directed by the Stanley Dollar Steamship Company, and authorized by the Commercial Dock Company, to collect from Kikutake, who seems to have been originally acting for the dock company, one-half of the total amount which the dock company was to receive from the Construction & Maintenance Company per passenger, to be applied on account of the money due to the steamship company under its agreement with it. The balance of the money due to the steamship company from the Commercial Dock Company, and which was to be determined by the number of passengers carried by the ship, was payable before or at the time the vessel should sail from Honolulu. It is not pretended that the Japanese laborers in question had any notice of the agreement between these corporations, and even if they had, we think it very clear from the record that their agreement was a common venture, each to share in the profits to be derived therefrom, and that in no true sense was it a charter party. It was, in effect, a common venture for the transportation of the laborers from Honolulu, to which the owner of the steamship was a party along with the other corporations mentioned; and we think from the evidence in the case that the court below was quite right in holding that Kikutake, in his dealings with the

Digitized by Google

appellees, was all the time representing the owner of the ship, as well as the other parties interested in the enterprise. United States v. Shea, 152 U. S. 178, 186, 14 Sup. Ct. 519, 38 L. Ed. 403.

It is equally clear, we think, that the temporary acceptance of the tickets by the appellees, not at the time understood by or explained to them, and which were repudiated and transportation thereunder declined as soon as their contents were discovered, did not create a new contract between the appellees and the ship, or annul or in any way change that made by them with Kikutake, which was the contract sued on, strictly maritime in character, and therefore clearly within the jurisdiction of the court below, and which contract was violated by the delivery, under the circumstances stated, by Dollar to the appellees of the tickets providing only for their transportation to Victoria, and by the inability of the vessel to transport them to Seattle.

We are of the opinion, however, that the court below erred in allowing the appellees damages for loss of time after the breach of the contract and while awaiting the trial of the case, and also in allowing a docket fee in each of the libels. Where the libels are consolidated, as in the present instance, but one docket fee can be allowed. The Mount Eden (D. C.) 87 Fed. 483.

The cause is remanded to the court below with directions to modify the decree as above indicated, and, as so modified, it will stand affirmed.

(160 Fed. 914.)

LEARY et al. v. TALBOT et al.

(Circuit Court of Appeals, Second Circuit. April 14, 1908.)

No. 191.

SHIPPING—DEMURRAGE—LIABILITY OF CHARTERER FOR DELAY IN DISCHARGING.

The owners of a schooner *held* entitled to recover demurrage from a charterer for delay in discharging a cargo of lumber in New York under a charter providing for customary dispatch where the vessel was required by the charterer to discharge portions of the cargo at different docks, and the delay resulted from her detention at the first for a longer time than was anticipated through no fault of the vessel, which threw her behind in reaching the others, and in consequence the berths reserved for her there were occupied and she was obliged to wait, the charterer being bound by the custom of the port to furnish her berths when ready.

[Ed. Note.—For cases in point, see Cent. Dig. vol. 44, Shipping, § 576. Demurrage, see notes to Harrison v. Smith, 14 C. C. A. 657; Randall v. Sprague, 21 C. C. A. 337; Hagerman v. Norton, 46 C. C. A. 4.]

Appeal from the District Court of the United States for the Southern District of New York.

For opinion below, see 151 Fed. 355.

Hagen, Goodrich & Coughlan and H. W. Goodrich, for appellants.
Armstrong, Brown & Boland and P. M. Brown, for appellees.

Before Judges LACOMBE, WARD, and NOYES.

WARD, Circuit Judge. This libel is filed by the owners of the schooner Persis A. Colwell to recover 21 days' demurrage at the port

Digitized by Google

of discharge. The charter party provided as to lay days and demurrage:

"Customary dispatch at port of discharge where vessel can safely get and discharge. And that for each and every day's detention by default of said party of the second part (the charterers) or agent ($44.00) forty-four dollars per day, shall be paid by said party of the second part, or agent, to the said party of the first part, or agent. The cargo or cargoes to be received, and delivered alongside, within reach of the vessel's tackles."

Though the vessel does the loading and discharging, this provision for lay days is an engagement of the charterers that they will take the cargo within that time, and the provision for demurrage is an engagement that thereafter they will pay at the rate of $44 per day for every day of detention due to them. The purpose of lay days is to fix the period during which the charterer may detain the vessel in discharging for the agreed freight and beyond which he must pay her an extended freight in the form of demurrage, or of damages in the nature of demurrage. Carver, at section 608 of his work on Carriage of Goods by Sea, states the law thus:

"The work of putting the goods into the ship and of taking them out again, whether under a charter party, or in a general ship, is in nearly all cases done by the servants of the shipowner. But the duty of bringing the goods to be shipped, and of receiving them at the port of discharge, lies upon the freighter. And in these matters defaults are apt to occur which lead to detention of the ship, and consequent loss to the shipowner. It is, therefore, usual in charter parties, and sometimes in bills of lading, to fix times within which the ship is to be loaded and discharged; and, where that is done, the provision is understood as an undertaking by the freighter that the ship shall be loaded or discharged within the time so fixed. The shipowner must not be in default; he must by his servants do his part of the work of receiving and stowing, or unloading, with diligence and with the proper number of men; but the undertaking as to the time which the loading or discharge shall occupy is given by the freighter, not by the shipowner. This is commonly marked in the charter party by saying that so many days 'are to be allowed the said merchant for loading, etc.' But the effect is the same whether the clause is in that form, or states, generally, that the cargo 'shall be loaded' in so many days. The promise is made by the freighter, for the benefit of the shipowner. Exceptional cases, however, occur. A charter party provided that the cargo should be 'received from alongside ship at port of discharge as customary as fast as steamer can deliver in ordinary working hours. * * * Not less than 100 standards a day loading or discharging, and ten days on demurrage over and above the said laying days at £70 per day.' The Court of Appeals, affirming Wills, J., held that the stipulation as to 100 standards a day was for the protection of the charterers; and did not amount to an undertaking by them that the ship should be discharged at that rate."

It is stipulated in this case that the vessel carried 411,040 feet of lumber, and that the customary discharge at the port of New York for such a vessel is 25,000 feet per day, making 16½ lay days. After these lay days had expired the charterers were bound to pay demurrage for every day of detention in discharging the cargo which was in any way due to them.

The charterers having sold the cargo to four different persons had, in accordance with a rule of the Maritime Exchange of this port which was received in evidence, one full calendar day after the vessel had reported in which to furnish her a berth, and were bound to furnish her a berth where she could discharge each subsequent consignment

Digitized by Google

after receiving 24 hours' notice from the master that he would be ready to discharge it at the expiration of that time. The vessel reported on October 17th at 11 a. m., and, under the rule, the charterers were entitled to one full calendar day in which to furnish a berth, which would have given them until the morning of October 19th, a calendar day extending from midnight to midnight. Chapter 677, Laws of New York, § 27. In point of fact the discharge began on the morning of October 18th, so that lay days should be calculated from that time, and omitting Sundays, because the lay days contemplated are evidently working days, the 16½ days expired November 7th at noon. Thereafter the discharge continued at two subsequent berths designated by the charterers until November 25th at 5:30 p. m., during which time every working day seems to have been used except 7, on which the designated berth was occupied by other vessels.

Respondents claim that this detention resulted from delay of half a day in discharging the vessel at the first berth, on account of rain, which disarranged the schedule they had provided for the subsequent berths, so that other vessels got into them. We do not think the schooner had anything to do with this schedule. The charterers were bound to furnish berths, and were responsible for any delay caused by their not doing so. If the vessel was at fault for any delay during the lay days the legal consequence would be simply to extend the lay days pro tanto, and not to make her liable for the disarrangement of the charterers' schedule, but the delay in question was due to the refusal of the custom house inspector to work in the rain and not to the fault of the vessel at all, so that the half day must be included in the lay days.

All the subsequent detention except Sundays was due to the charterers, so that as demurrage began to run on the afternoon of November 6th, and parts of demurrage days are treated as whole days, the libelants were entitled to recover for 18 days, but, as they have not appealed, the decree of the District Court giving them 15½ days is affirmed, with interest and costs.

(160 Fed. 916.)

In re STROBEL.

(Circuit Court of Appeals, Second Circuit. February 28, 1908. On Rehearing, March 9, 1908.)

Nos. 170, 171.

1. BANKRUPTCY—RECEIVERS—ATTORNEY.

Where a debtor is declared a bankrupt at the instance of a creditor, and a receiver is appointed, the attorney for such petitioning creditor should not be employed as attorney for the receiver.

2. SAME—ORDERS—MODE OF REVIEW.

A receiver in bankruptcy having turned over to the petitioning creditor certain of the bankrupt's property on the creditor's claim that the bankrupt was a bailee thereof only, a special commissioner recommended that the receiver's action be not approved, which recommendation was affirmed by an order of the district court. Another order was thereafter made.

Digitized by Google

referring to the same commissioner the duty to ascertain the value of the property, and the sum the creditor should pay to the bankrupt's trustee, and, on the commissioner's finding being filed, an order was entered confirming his report and directing payment to the trustee or clerk of the court. *Held*, that none of such orders were appealable or reviewable otherwise than by a petition for review, as authorized by Bankr. Act July 1, 1898, c. 541, § 24b, 30 Stat. 553 (U. S. Comp. St. 1901, p. 3432).

[Ed. Note.—Appeal and review in bankruptcy cases, see note to In re Eggert, 43 C. C. A. 9.]

3. SAME—TIME.

A petition to review such orders could not be sustained, unless taken within 10 days after the entry of the order, under Circuit Court of Appeals rule 38, providing that a petition for review shall be filed within 10 days after the entry of the order, unless by an order filed within such 10 days the District Court enlarges the time.

4. SAME—OBJECTIONS—WAIVER.

A stipulation that two petitions to review orders in bankruptcy, with certified copies transmitted by the clerk of the District Court should be printed in one appeal book, was not sufficient to constitute a waiver of any legal objection to the petitions.

Petitions for Revision of Proceedings of the District Court of the United States for the Eastern District of New York, in Bankruptcy. See 155 Fed. 692.

This cause comes here upon petitions to review two orders of the bankruptcy court. The facts are sufficiently set forth in the opinion.

Frank Trenholm (Garrard Glenn, of counsel), for petitioner.
B. F. Edsall, for respondents.
A. C. Aubrey, for bankrupt.

Before LACOMBE, COXE, and WARD, Circuit Judges.

LACOMBE, Circuit Judge. On July 17, 1905, the present petitioner for review, Bachrach, filed a petition praying that Strobel, whose business was the making of gold watch cases, be adjudged a bankrupt. He claimed to be a creditor for goods, wares, and merchandise sold between August 26, 1904, and August 15, 1905. In due course Strobel was adjudged a bankrupt and trustee was appointed; Bachrach on the trial testifying that Strobel was indebted to him for gold sold and delivered. After petition was filed a receiver was appointed, who took possession of the bankrupt's property. Said receiver appointed as his attorneys the firm of lawyers who had represented Bachrach as petitioning creditor. The latter is represented on the hearing in this court by a lawyer in no way connected with that firm. It would have been well had Congress in the bankrupt act expressly prohibited receivers from selecting as attorneys or counsel lawyers who had appeared for either the bankrupt or the petitioning creditor. Such selection affords a ready opportunity for chicanery, fraud, and perjury; and it would seem desirable for bankruptcy courts generally to adopt the wholesome rule in force in the Southern district of New York forbidding such selection, and to enforce such rule rigidly.

Digitized by Google

Having secured the appointment of his own lawyer as the legal adviser of the receiver, Bachrach changed his position, claiming that Strobel was a bailee of the gold, which he had let him have solely to be made into watch cases and returned to himself (Bachrach). Thereupon the receiver under the advice of the lawyer who represented both sides—receiver and petitioning creditor—allowed the latter to take into his possession all the watch cases, some completed, some in course of manufacture, all material for the making of such cases, all sweepings and cleanings, gold nuggets, gold from water tanks, and even the tar paper floor covering, in which was gold filings; in fact everything but the machinery, tools and safe. After appointment of the trustee the receiver filed his account, and objections were made to his delivery of the property to Bachrach, whereupon, on the latter's petition, it was referred to a special commissioner to examine and report thereon. He recommended that the action of the receiver in that respect be not approved, and his report was confirmed by an order of the District Court August 2, 1906. On November 19, 1906, an order was made referring it to the same special commissioner to ascertain the value of said property and what sum Bachrach should be required to pay to the trustee. The special commissioner found the value of said property to be $3,015.76, and on August 12, 1907, the District Court confirmed his report and entered an order directing Bachrach to pay said sum, with interest and costs, to the trustee or to the clerk of the court.

None of these three orders was appealable, or could be reviewed otherwise than by petition to review, under Act July 1, 1898, c. 541, § 24b, 30 Stat. 553 (U. S. Comp. St. 1901, p. 3432). The bankrupt act does not limit the time within which such petition to review shall be filed and served; but this court by rule 38 has, in analogy to the provisions of the act touching appeal, fixed such time as "within 10 days after the entry of the order sought to be reviewed," with the proviso that by order filed within such 10 days the District Court may enlarge the time for filing petition for review. In the case of these three orders, entered, respectively, August 2, 1906, November 19, 1906, and August 12, 1907, we find in the record no such order enlarging time; and, since the petition to review these three orders was not filed until September 28, 1907, more than 10 days after the entry of the last of them, they cannot now be reviewed. On May 27, 1907, Bachrach applied to the District Court, on petition, for an order vacating the several reports of the special commissioner and also the orders of August 2, 1906, and November 19, 1906. That application was denied by an order entered August 12, 1907, and a petition to review this last-mentioned order was filed and is now presented. But such petition was not filed till September 28, 1907, and no order enlarging time to file is found in the record.

Petitioner contends that his adversary cannot take advantage of these technical defects, because of some stipulation entered into in this court. But upon examination it appears that the stipulation is only that the two petitions to review, with the certified copies transmitted by the clerk of the District Court, "be printed in one appeal book." That is

Digitized by Google

not sufficient to constitute a waiver of any legal objection to such petitions, and they are therefore dismissed.

On Rehearing.

Attention has been called to the stipulation extending time to file petition for review. A reargument, however, should not be ordered, since, upon the merits, we were satisfied that the order of the District Court should be affirmed.

(160 Fed. 919.)

BORDEN'S CONDENSED MILK CO. v. LOUISIANA PURCHASE EXPOSITION CO.

(Circuit Court of Appeals, Eighth Circuit. March 27, 1908.)

No. 2,445.

EQUITY—JURISDICTION—REVIEW OF ACTION OF SPECIAL TRIBUNAL—AWARD BY EXPOSITION JURY.

Under the rules and regulations adopted and promulgated by the Louisiana Purchase Exposition Company for the government of exhibitors and the making of awards, which created a superior jury, with power to finally pass upon the recommendations of department and group juries and to make awards after notice to exhibitors affected and an opportunity to be heard, an award so made after a full hearing is conclusive, and cannot be reviewed by the courts, unless some ground of equitable jurisdiction, such as fraud, accident, or mistake, is shown; nor can the company be compelled to change its records or enjoined from publishing the true purport of its proceedings at suit of an exhibitor.

Appeal from the Circuit Court of the United States for the Eastern District of Missouri.

Frederick N. Judson, for appellant.

Franklin Ferriss (Nathaniel S. Brown, on the brief), for appellee.

Before HOOK, Circuit Judge, and PHILIPS, District Judge.

HOOK, Circuit Judge. This is an appeal from a decree dismissing the bill of complaint of the Borden's Condensed Milk Company against the Louisiana Purchase Exposition Company to establish an award for a collective exhibit of its products and to annul and enjoin the publication of a separate award for a member of the collection.

The Exposition Company, in connection with a commission organized under an act of Congress, conducted the Exposition at St. Louis, Mo., in 1904, held in commemoration of the purchase of the Louisiana Territory. Rules and regulations for the conduct of the exposition, the government of exhibitors, and the making of awards were promulgated by the Exposition Company and approved by the commission. A system of classification into departments and subordinate groups and classes was adopted for the exhibits. One of the great departments was that of Agriculture, and among the groups composing it were No. 85, relating to animal food products, and No. 87, relating to farinaceous products and their derivatives. Each group was in turn subdivided into minor classes. There were also provisions for the examination of the exhibits by juries and a system of

Digitized by Google

awards of merit indicated by diplomas of four classes: Grand prizes, gold medals, silver medals, and bronze medals. A decimal scale was used in judging the exhibits, in which 100 points indicated perfection, and the points were apportioned among various matters, some of which had no relation to the intrinsic excellence or worth of the articles exhibited. A scale of markings determined the standard attained, thus, for example, a marking of from 75 to 84 points, inclusive, entitled an exhibit to a bronze medal, the lowest award. There were group juries, department juries, and one superior jury. It was the duty of a group jury to examine the competing exhibits in the group to which it was assigned, and, having determined their rank or class in order of merit, to recommend awards accordingly. The recommendations were then reported to the department jury of the department in which the group belonged, whose duty it was to review the reports, to harmonize differences between the recommendations of the several group juries, and to make them conform to the rules and regulations of the exposition. After being approved or changed by the department jury, the recommendations for award were certified to the superior jury, which was given power to "determine finally and fully the awards to be made." Provision was made for notice to exhibitors of their awards, for their protests in writing setting forth their grounds of dissatisfaction, and for decision thereof by the superior jury. What a group jury and a department jury did was merely advisory. It was the superior jury that made awards and determined controversies about them.

Borden's Company, the complainant, entered in group 85 exhibits of its condensed milk, evaporated cream, and malted milk as animal food products. It may be assumed that it duly asked an award for the exhibit as a collective one. It is certain that it applied for a separate award for each kind of product. Horlick's Food Company entered its malted milk in group 87 as a farinaceous product. Both brands of malted milk, Borden's and Horlick's, might properly have been entered in either group. They were similar in composition and commercially competitive. The superior jury made the Borden's Company the following awards: On condensed milk a grand prize, on evaporated cream a gold medal, and on malted milk a silver medal—all in group 85. It awarded the Horlick's Company a gold medal on malted milk in group 87. The complaint of the Borden's Company is twofold: It says it either had or is entitled to a grand prize on its exhibit considered as a collective one, and it asks that one be established by decree of court. It also says that the plan of the exposition contemplated competition between exhibitors, the determination by juries of the comparative excellence of competing articles, and the making of awards accordingly; also that its malted milk in group 85 and Horlick's malted milk in group 87 were examined by different group juries, thereby ignoring the basic rule of competition, and that a higher award to Horlick's Company indicates to the world a greater merit, and is therefore unjust and injuriously affects the value of its product. In this connection the Borden's Company seeks a decree annulling its own award on malted milk and enjoining the publication thereof.

Digitized by Google

The claim for an award of a grand prize for a collective exhibit cannot be sustained. Though the group jury recommended one, it conclusively appears that the superior jury never made such an award. Whether this was due to the fact that the recommendation was never before the superior jury, or to the position of that jury that the rules and regulations of the exposition prohibited such an award, is immaterial. There was no award by the specially constituted board which alone had authority, and a court cannot, in a case like this, assume its functions and decree one. Nor can the Exposition Company be compelled to change its records relating to the awards for exhibits of malted milk, or be enjoined from publishing the true purport of its proceedings. It is true the malted milk of Borden's Company and that of Horlick's Company were examined by different group juries; but that fact, indicating the absence of individual competition in the examination, must have been known to the department jury when it acted on the recommendations, and also to the superior jury when it made the awards. Moreover, Borden's Company made specific complaint in writing of this very matter to the superior jury, as it was authorized to do by the rules and regulations of the exposition; but, notwithstanding the complaint, the original awards were adhered to. When we refer to the superior jury, we include the committee upon which the powers of that jury devolved after its dissolution. In the scheme of the exposition, to which the Borden's Company consented when it entered its exhibits, the superior jury was the tribunal of last resort, in the absence of recognized grounds for interference by a court of equity. Power to determine awards finally and fully was given it. There were provisions for notice to the exhibitors and for a hearing of complaints. Notice was given, complaint made, and hearing had, and the decision was adverse to complainant. Courts of equity will grant relief in cases of fraud, accident, or mistake from the awards, reports, and acts of special tribunals, whether created by law or by the convention of the parties; but we can discover no such grounds here. The final decision of the superior jury proceeded upon a full knowledge and consideration of the essential facts. It was not the result of misapprehension of conditions. In their brief counsel charge fraud on the part of certain exposition officials. The bill contains no averments of fraud sufficiently direct and particular to invite an issue; but it is proper to say that we think the evidence discloses no ground whatever for the imputation. The matters to which attention is directed are consistent with the utmost honesty and good faith, and that they occurred is not surprising, considering the complicated details of procedure and the immense amount of labor connected with an exposition of that magnitude.

It may be said, in conclusion, that the view prevailed with the superior jury that the competition contemplated in the plan of the exposition was primarily with fixed standards, and not a competition of each exhibit with its commercial competitor, though it does not clearly appear that this was the moving reason for the final result.

The decree is affirmed.

Digitized by Google

(160 Fed. 922.)

HOLMES v. BAKER & HAMILTON et al.

(Circuit Court of Appeals, Ninth Circuit. February 24, 1908.)

No. 1,513.

1. PARTNERSHIP—DISSOLUTION—CONTINUANCE FOR PAYMENT OF DEBTS.

Where assets or debts of a partnership remain after dissolution, the partnership is considered as subsisting as to its creditors until its property is subjected to the satisfaction of their claims.

[Ed. Note.—For cases in point, see Cent. Dig. vol. 38, Partnership, §§ 624–644.]

2. BANKRUPTCY—PARTNERSHIP—ACT OF BANKRUPTCY—DUTY OF RETIRING PARTNER.

Bankr. Act July 1, 1898, c. 541, § 5a, 30 Stat. 547 [U. S. Comp. St. 1901, p. 3424], declares that a partnership during the continuance of the firm business or after its dissolution and before final settlement may be adjudged a bankrupt, and section 5c provides that the bankruptcy court which has jurisdiction of one of the partners may have jurisdiction of all of the partners and of the administration of the partnership and individual property. *Held* that, where a partnership was insolvent at the date of its dissolution, and thereafter an execution was levied on the firm's property for a partnership debt, the duty devolved on the retiring partner to discharge such levy, as well as on any other members of the firm, and a failure so to do constituted an act of bankruptcy, justifying an adjudication against the firm, and also against its members, including such retiring partner.

Appeal from the District Court of the United States for the Eastern Division of the Eastern District of Washington.

In a petition of the creditors of the firm of C. H. Holmes & Co., filed on August 18, 1906, praying that the firm and each member thereof be adjudged bankrupt, it was alleged that the said partnership and each of its members are and have been insolvent since May 1, 1906, that the said firm committed an act of bankruptcy in permitting one of its creditors to obtain a preference through legal proceedings against the firm, resulting, on July 12, 1906, in a judgment upon which execution was issued and levy made on the stock of goods of the said firm, which goods were advertised to be sold by the sheriff on August 21, 1906, and that neither the firm nor any of its members have done aught to vacate or discharge said preference. The appellant, C. H. Holmes, who was one of the members of said partnership, answered the petition, alleging that on March 27, 1906, for a good and valuable consideration he had sold and transferred to his copartner Park all his interest in the firm and severed his connection with the same and its business. On these pleadings and the stipulation that at the time of its dissolution on March 27, 1906, the partnership was insolvent, the said partnership and each member thereof was adjudged bankrupt.

O. C. Moore, D. W. Henley, and A. G. Kellam, for appellant.

W. H. Winfree and B. C. Mosby, for appellees.

Before GILBERT, ROSS, and MORROW, Circuit Judges.

GILBERT, Circuit Judge (after stating the facts as above). It is assigned as error that the District Court adjudged the appellant a bankrupt. It is contended that the failure of the appellant to release and discharge the preference of the execution creditor was not an act of bankruptcy on his part, the debt not being his debt, nor the merchandise levied on his property, but that of a firm with which he had severed his connection months prior thereto, and it is argued that at

Digitized by Google

the time of the alleged act of bankruptcy the firm had long ceased to exist, and that no act can be committed by a nonexisting entity. The vice of this argument is that it assumes that an insolvent partnership at the time of its dissolution ceases to be an entity. The rule is well settled that, where assets or debts of a partnership remain after dissolution, the partnership is considered as subsisting as to its creditors until its property is subjected to the satisfaction of their claims. In re Crockett et al., 2 Ben. 514, Fed. Cas. No. 3,402; In re Foster, 3 Ben. 386, Fed. Cas. No. 4,962; In re Noonan, 3 Biss. 491, Fed. Cas. No. 10,292; In re Stowers et al., 1 Lowell, 528, Fed. Cas. No. 13,516; In re Hirsch et al. (D. C.) 97 Fed. 571. The bankruptcy act of July 1, 1898, c. 541, 30 Stat. 544 [U. S. Comp. St. 1901, p. 3418], in recognition of this rule, provides in section 5a that a partnership during the continuance of the partnership business or after its dissolution, and before the final settlement thereof, may be adjudged a bankrupt, and section 5c provides that the court of bankruptcy which has jurisdiction of one of the partners may have jurisdiction of all the partners and of the administration of the partnership and individual property. See In re L. Stein & Co., 127 Fed. 547, 62 C. C. A. 272.

It is true that an individual member of a firm cannot be adjudged a bankrupt for an act of bankruptcy not committed by him or in which he did not participate (In re Meyer, 98 Fed. 976, 39 C. C. A. 368); but that is not the case here presented. The act of bankruptcy in this case was committed by all the members of the firm. It was an act of omission, the failure to discharge the levy of the execution, a duty which rested as much upon the appellant as upon any member of the firm. Notwithstanding the dissolution of the copartnership, it remained, as it was before, the appellant's duty to see that the property of the copartnership was devoted to the payment of the partnership debts, as to which he had not been released.

The adjudication is affirmed.

(160 Fed. 923.)

NEW LIVERPOOL SALT CO. v. WELLBORN, District Judge.

(Circuit Court of Appeals, Ninth Circuit. March 7, 1908.)

No. 1,568.

APPEAL AND ERROR—EFFECT OF APPEAL—CORRECTION OF JUDGMENT—CLERICAL ERRORS.

Where, a decree, enjoining defendant therein from diverting water from a river so that it should flow on complainant's land, by clerical error failed to describe the land, the court, after the term and after an appeal had been taken, had power to correct the mistake, and, having done so pursuant to a stipulation of the parties, had no power thereafter to vacate the corrected order.

[Ed. Note.—For cases in point, see Cent. Dig. vol. 2, Appeal and Error, § 2201.]

Petition for Writ of Mandate.

Page, McCutchen & Knight, for petitioner.

John S. Chapman, for respondent.

Before GILBERT, ROSS, and MORROW, Circuit Judges.

Digitized by Google

PER CURIAM. The petitioner herein having filed its petition for a writ of mandamus to the above-named respondent, directing him to entertain an application made in said Circuit Court in a cause wherein the petitioner herein is complainant and the California Development Company is the defendant, for an order upon said defendant, its officers and agents, to show cause why they should not be dealt with as for contempt of said court in disobeying its decree of injunction in said cause, and an order having been made by the court in response to said petition that the respondent show cause why said petition should not be granted, and the respondent having answered said petition and appeared herein by his counsel John S. Chapman, the petitioner appearing by E. J. McCutchen, and it appearing from the said petition and answer that on January 10, 1908, a decree was entered in the said Circuit Court of the United States for the Southern District of California in the case of New Liverpool Salt Company, Complainant, v. California Development Company, Defendant, enjoining the defendant therein from diverting water from the Colorado river in any way so that the same should flow upon the lands of the complainant described in the bill of complaint, and that by clerical mistake in the entry of the decree so made the lands of the complainant were incorrectly described; that on February 8, 1908, said mistake was discovered by complainant's counsel, whereupon a stipulation was made and signed by counsel for the respective parties that a manifest clerical error had been made in such description of said lands in said decree, and that an order be made by said Circuit Court directing the clerk thereof to correct the said description by inserting and changing the necessary words to render the same correct and in accordance with the judgment of the court; that on February 10, 1908, an order was accordingly made by the court directing said clerk to correct the original decree and the record thereof in accordance with the stipulation, and said clerk did then and there make said correction by interlineation in the text of the said decree and the record thereof; that on said February 10, 1908, the said complainant filed in said court and cause a petition for a judgment for a contempt, setting forth that said injunction embodied and contained in said decree had been violated and disobeyed by the defendant and others, officers and agents of the defendant, and on said day an order was made by the court directing said defendant and its said agents and officers to appear before the said Circuit Court at a time therein named to show cause, if any they had, why they should not be punished for contempt for disobeying said injunction; that on February 19, 1908, while a motion made by the defendant for the interpretation of said final decree was pending and on hearing before said court, the judge thereof stated to counsel representing the respective parties that he entertained grave doubt as to the validity of the order made on February 10, 1908, for the correction of error in said final decree, for the reason that said order was made after the expiration of the term at which the decree was signed and after an appeal had been perfected by the defendant from said decree to this court; that thereafter the said court made an order reciting that it appeared to its satisfaction that its previous order for the correction of said de-

Digitized by Google

cree was void, and that the decree in so far as it related to injunctive relief was inoperative, because of the failure therein to describe the complainant's land, whereupon it was ordered that the amendment so previously made and ordered be vacated and set aside, and the amendment stricken from the decree, but the clerk was directed by the court not to physically strike out the amendments so interlined by the order of February 10, 1908; and it now appearing to this court that the error in the description of the lands so contained in the original decree was a manifest clerical error such as the said Circuit Court had the power and jurisdiction to correct, notwithstanding the expiration of the term and the perfection of the appeal to this court, and that it was properly corrected on stipulation of the parties by the interlineations made therein under the order of February 10, 1908, and that said court had not the power subsequently to set aside or vacate its order making said corrections in accordance with the stipulation of the parties, it is therefore ordered that a writ of mandate issue from this court directing said Circuit Court to entertain said application so made for an order to show cause why the defendant and its officers and agents should not be dealt with for contempt of said court in disobeying the injunction of said decree in said court, and to proceed and hear the same.

(160 Fed. 925.)

LEON RHEIMS CO. v. UNITED STATES.

(Circuit Court of Appeals, Second Circuit. February 11, 1908.)

No. 129 (4,393).

CUSTOMS DUTIES—CLASSIFICATION—TRIMMED HATS—"WEARING APPAREL IN CHIEF VALUE OF SILK."

In applying the provision in Tariff Act July 24, 1897, c. 11, § 1, Schedule N, par. 432, 30 Stat. 191 (U. S. Comp. St. 1901, p. 1675), for "hats * * * trimmed, * * * composed wholly or in chief value of fur," the composition of the hats should be determined by reference to the whole hat, including the trimming; so that where hats, the bodies of which are fur, are so trimmed that the silk trimming is the component of chief value in the hats, they are dutiable under Schedule L, par. 390, 30 Stat. 187 (U. S. Comp. St. 1901, p. 1670), as "wearing apparel in chief value of silk."

Appeal from the Circuit Court of the United States for the Southern District of New York.

Appeal from a decision of the Circuit Court, affirming a decision of the Board of General Appraisers, G. A. 6,411 (T. D. 27,541), which sustained the action of the collector.

For decision below, see 154 Fed. 969.

Comstock & Washburn (Albert H. Washburn, of counsel), for importers.

D. Frank Lloyd, Asst. U. S. Atty.

Before LACOMBE, WARD, and NOYES, Circuit Judges.

NOYES, Circuit Judge. The merchandise consists of trimmed hats. The bodies are made of fur and the trimmings of silk. Silk

Digitized by Google

is the component material of chief value in the completed hat; fur, in the body considered by itself.

The hats were assessed for duty as "wearing apparel of which silk is the component material of chief value," under paragraph 390 of the tariff act (Act July 24, 1897, c. 11, § 1, Schedule L, 30 Stat. 187 [U. S. Comp. St. 1901, p. 1670]). The importer claims that the hats should have been assessed under paragraph 432 of the act:

"Hats * * * trimmed or untrimmed * * * composed wholly or in chief value of fur of the rabbit, beaver, or other animals. * * *"

The importer contends that only the body should be considered in determining that which is the most valuable material in the hat. But as the statute speaks specifically of trimmed hats—a completed article—it is impossible to perceive any ground for the contention. The articles in question are trimmed hats not composed in chief value of fur, and are manifestly outside of paragraph 432.

The claim of the importer that the Board of Appraisers in considering other paragraphs of the act have not always ruled consistently with their decision in the present case is not a matter in which we can be expected to express interest. It certainly has no bearing upon our decision here.

The decision of the Circuit Court is affirmed.

(160 Fed. 926.)

WOOD v. GENERAL ACCIDENT INS. CO. OF PHILADELPHIA.

(Circuit Court of Appeals, Third Circuit. May 1, 1908.)

No. 43.

INSURANCE—ACCIDENT POLICY—CONSTRUCTION—"RIDING AS PASSENGER IN REGULAR PASSENGER CONVEYANCE."

Where a beneficiary in an accident policy was a United States railway mail clerk, and was killed while riding in a mail car in the performance of his duties, he was not "actually riding as a passenger in or on any regular passenger conveyance provided by a common carrier," within an accident policy insuring the person named as beneficiary under certain circumstances against loss by accident while actually riding as a passenger in or on any regular passenger conveyance.

[Ed. Note.—Accident insurance—risks and causes of loss, see note to National Acc. Soc. of City of New York v. Dolph, 38 C. C. A. 3.]

In Error to the Circuit Court of the United States for the Western District of Pennsylvania.

For opinion of lower court, see 156 Fed. 982.

Edmond Englert, for plaintiff in error.

Before MOODY, Circuit Justice, and DALLAS and GRAY, Circuit Judges.

DALLAS, Circuit Judge. In the court below the plaintiff in error brought an action against the defendant in error on a policy of accident insurance, which contained a clause as follows:

"In case a beneficiary other than the insured or his legal representatives is specifically named in the schedule of warranties indorsed on this policy,

Digitized by Google

then and not otherwise this policy shall also, in consideration of the premium, insure the person named as beneficiary in the said schedule as follows: Against any one of the following losses, resulting within ninety days from date of accident and caused solely and exclusively by injuries covered by this policy and sustained by said beneficiary while actually riding as a passenger in or on any regular passenger conveyance provided by a common carrier, or (2) while riding in a regular passenger elevator, or (3) in consequence of the burning of a building in which said beneficiary shall be at the commencement of the fire, in the following sums: Payment for loss of life, $5,000."

Ira H. Wood, "the person named as beneficiary," was a United States railway mail clerk. In pursuance of this employment he was in the mail car of a moving train, when an accident by derailment caused his death, and the sole point now made is as to whether, upon these facts, and with reference to the provision above quoted, the Circuit Court erred in holding that he was not "actually riding as a passenger in or on any regular passenger conveyance provided by a common carrier." As these words are ordinary words, the meaning of which is plain, they should, of course, be understood and applied accordingly; and that a mail clerk at work in a mail car is not, in common apprehension, "actually riding as a passenger in or on any regular passenger conveyance," cannot, we think, be reasonably questioned. This being so, neither the argument of counsel with relation to the locus contractus, nor their discussion of cases against carriers for personal injuries, need be considered.

We are clearly of opinion that the court below put the proper construction (if construction it may be termed) upon the policy sued on, and therefore its judgment is affirmed.

(160 Fed. 927.)

BALLANTINE et al. v. BALLANTINE et al.

(Circuit Court of Appeals, Third Circuit. February 18, 1908. On Rehearing, March 26, 1908.)

No. 52.

TRUSTS—LEGAL ESTATES—VESTING IN BENEFICIARY.

A bequest to executors, in trust to pay the income to a son until such time as they think proper to pay him the principal, is valid, and the son is not entitled to demand the principal immediately, or on reaching his majority.

Appeal from the Circuit Court of the United States for the District of New Jersey.

Reynolds D. Brown and John G. Johnson, for appellants.

John O. H. Pitney and R. V. Lindabury, for appellees.

Before DALLAS, GRAY, and BUFFINGTON, Circuit Judges.

PER CURIAM. This case has been thoroughly presented by counsel and has received our careful consideration. But nothing could profitably be added to the opinion of the learned judge below. We concur in his conclusion, and think he adequately sustained it. Ballantine v. Ballantine (C. C.) 152 Fed. 775. The contention that a bequest to executors, in trust to pay the income to a son until such time as

Digitized by Google

they think proper to pay him the principal, entitles the son to demand the principal immediately, or on reaching his majority, has been strongly urged, and is not wholly unsupported by judicial decision; but there are decisions likewise to the contrary, and we are of opinion that, in the absence of binding authority, the position taken by the Circuit Court should be upheld.

The decree is affirmed.

On Rehearing.

This cause came on to be further heard on the suggestion and agreement of counsel hereto annexed. On consideration whereof, it is now here ordered, adjudged, and decreed by this court that the decree of the said Circuit Court in this cause be and the same is hereby modified, so that the first paragraph thereof shall read as follows:

"That the bill be and the same is hereby dismissed, without prejudice to complainants' rights to hereafter claim that the trust as to the last one-fifth of George A. Ballantine's share will cease upon the death of testator's widow."

And it is further ordered that the decree of the said Circuit Court for the District of New Jersey, as thus modified, be and the same is hereby affirmed. And it is further ordered that the appellants pay the costs in this court.

(160 Fed. 928.)

DELAWARE SEAMLESS TUBE CO. et al. v. SHELBY STEEL TUBE CO.

(Circuit Court of Appeals, Third Circuit. April 23, 1908.)

No. 5.

1. PATENTS—ASSIGNMENT—SUFFICIENCY.

A conveyance by a corporation of all of its property, including its "good will, patents, trade-marks," etc., is effective as an assignment of a patent then owned by it, although not described therein, and it is immaterial as against an alleged infringer that it was not eligible for record under Rev. St. § 4898 (U. S. Comp. St. 1901, p. 3387).

[Ed. Note.—For cases in point, see Cent. Dig. vol. 38, Patents, § 276.]

2. SAME—INFRINGEMENT—CHANGES IN FORM.

Mere formal changes, where there is substantial identity, are unavailing to escape infringement.

[Ed. Note.—For cases in point, see Cent. Dig. vol. 38, Patents, § 371.]

3. SAME—MACHINE FOR MAKING TUBING.

The Stiefel patent, No. 551,340, for mechanism for making tubes from metallic ingots, was not anticipated and discloses invention, nor is it strictly limited to the precise construction shown and described; also *held* infringed.

Appeal from Circuit Court of the United States for the Eastern District of Pennsylvania.

For opinion below, see 151 Fed. 64.

Charles K. Offield, for appellants.

Thomas W. Bakewell, for appellee.

Before DALLAS, GRAY, and BUFFINGTON, Circuit Judges.

DALLAS, Circuit Judge. The specification of error based upon the proposition that the complainant did not exhibit a sufficient title

Digitized by Google

to the patent sued on has not been maintained. The suggestion that "the test" of whether title passed by the assignment in question is "whether such paper could be recorded" under section 4898 of the Revised Statutes (U. S. Comp. St. 1901, p. 3387) has been attentively considered, but cannot be accepted. That section provides that "every patent * * * shall be assignable in law by an instrument in writing," and it makes an assignment void for omission to record only "as against any subsequent purchaser or mortgagee," etc. In this instance we have a writing which, as was said by the learned judge below, is an assignment, in terms, "of all the property of the company executing it, * * * specifically including also 'the good will, patents, trademarks,'" etc. Of course, the word "patents" included every patent which was assignable by the assignor (Herring-Hall-Marvin Safe Co. v. Hall's Safe Co., 28 Sup. Ct. 351, 52 L. Ed. 616); and, with respect to the parties to this cause, it is immaterial whether the instrument was or was not eligible for record.

The patent involved is No. 551,340, dated December 10, 1895, issued to Ralph Charles Stiefel, for "mechanism for making tubes from metallic ingots." Of its validity independent examination of the record and careful consideration of the arguments of counsel leave us in no doubt. We have arrived at the same conclusion as was reached by the Circuit Court, and deem it unnecessary to add anything to the reasoning of the learned judge in its support. Shelby Steel Tube Co. v. Delaware Seamless Tube Co. (C. C.) 151 Fed. 64.

Upon the question of infringement, too, but little, if anything, remains to be said. The departure of the defendant's machine from the prior art, even as advanced by Mannesmann, is palpable, and there is convincing evidence that it was contrived with especial reference to Stiefel's invention, and with intent to elude, if possible, the terms of his patent. The two organisms are similar in structure and appearance, but they are not precisely identical, and the sufficiency of their variance to preclude conflict depends upon the scope of the claims in suit, which are as follows:

"(1) The combination of two parallel disks revolving in the same direction and overlapping each other, one of said disks being beveled at its outer edge which beveled surface is opposed to a portion of the plane surface of the other disk; the outer diameter of this plane surface and the inner diameter of the beveled surface opposed to it being substantially the same and the edges formed by both diameters intersecting the same transverse plane through the pass between the disks; the angles of the opposing surfaces converging to this plane which is at the narrowest part of the pass, with a conical mandrel lying in the axis of the pass at its exit side, substantially as set forth.

"(2) The combination of two parallel disks revolving in the same direction, beveled at the edges of their adjacent faces and overlapping each other so that the beveled portion of one disk lies opposite a flat portion of the other disk, the edges formed by the smaller diameters of the beveled portion of the disks intersecting the same transverse plane through the pass between the disks whereby the sides of the pass first converge to this plane and then diverge beyond it, with a piercing mandrel located between the diverging sides of the pass and exactly in axial line of the pass, substantially as hereinbefore set forth."

It is true that the appellant "avoided a mere servile copy of the form" described in these claims. But, though he abstained from op-

Digitized by Google

posing the beveled portion of one disk to the flat surface of the other, yet the practical success which he accomplished was due to the embodiment in his slightly altered arrangement of the very essence of the meritorious invention which Stiefel had disclosed, and this court has repeatedly held that mere formal changes where there is substantial identity are unavailing to escape infringement. Mitchell v. Ewart, 81 Fed. 390, 26 C. C. A. 443; Thompson v. Second Avenue Traction Co., 93 Fed. 824, 35 C. C. A. 620; Smeeth v. Perkins & Co., 125 Fed. 285, 60 C. C. A. 199. See, also, Ives v. Hamilton, 92 U. S. 431, 23 L. Ed. 494; Elizabeth v. Pavement Co., 97 U. S. 137, 24 L. Ed. 1000; Hoyt v. Horne, 145 U. S. 302, 12 Sup. Ct. 922, 36 L. Ed. 713.

The contention that the file wrapper and contents in the matter of a certain abandoned application of Stiefel require that the patent in suit should be confined "to exact and specific mechanical construction and details" does not call for extended discussion. The application referred to presented claims both for an apparatus and for a process. The latter only were disallowed. The others were withdrawn, and are substantially contained in the patent now before the court.

As the first and second specifications do not "set out separately and particularly each error asserted and intended to be urged," they need not be regarded. Rule 11 (150 Fed. xxvii, 79 C. C. A. xxvii). The remaining specifications are overruled for the reasons we have briefly indicated, and which are more fully set forth in the opinion of the court below.

The decree is affirmed.

(160 Fed. 930.)

PIEPER et al. v. ELECTRO DENTAL MFG. CO.

(Circuit Court of Appeals, Second Circuit. April 14, 1908.)

No. 198.

PATENTS—INVENTION—REGULATOR FOR ELECTRIC MOTORS.

The Pieper patents, No. 704,099, for electric motor regulation, and No 721,229, for a motor, are void for lack of invention; the only novel feature in the combinations shown being the application to the small alternating current fan motors of the existing art of the regulating shunt with varying resistance already in use in direct current dental motors, which did not involve invention.

Appeal from the Circuit Court of the United States for the Southern District of New York.

This cause comes here upon appeal from a decree dismissing the bill in an equity suit brought for infringement of two patents. One patent is No. 704,099, issued July 8, 1902 (application filed March 24, 1899) to complainants for "electric motor regulation." The other is 721,229, issued February 24, 1903 (application filed September 20, 1901), to complainants for a "motor." The opinion of the Circuit Court will be found in 156 Fed. 672.

Charles Brown and F. F. Church (Church & Rich, of counsel), for appellants.

Howson & Howson (Charles Howson, of counsel), for appellee.

Before LACOMBE, COXE, and WARD, Circuit Judges.

Digitized by Google

LACOMBE, Circuit Judge. The specifications of the earlier patent state that the invention—

"relates to electric motors adapted for alternating currents and to certain improvements relating to and means for and method of controlling them, whereby they may be started with the necessary torque, and when the armature is under full speed it can be instantly stopped, and, if desired, its direction of movement reversed, without the use of clutches, brakes, or other mechanical holding devices. The invention, which is designed more particularly for small motors intended for operating dental engines or machines, where accurate speed regulation is the leading requisite, relates to alternating current motors of the direct-current type having usual laminated field magnets and the windings designed for a relatively high electro-motive force or relatively high self-induction, armature-coils designed for a relatively low electro-motive force or having a relatively low self-induction, commutator and commutator-brushes arranged at the neutral point, said field and armature windings being connected in series; and the novel features of the invention relate to the control of such motors at any speed and with or without a load by a permanent shunt around the armature, and the accurate regulation of the motor is accomplished by the manipulation of a variable resistance interposed in said shunt. * * * The function of the resistance in shunt with the armature of a series-wound motor of the direct-current type, which is wound as stated for alternating currents, is not only to maintain the voltage at the armature-terminals constant, but permits an armature winding of relatively low self-induction or few turns, which is necessary in an alternating-current motor of this type to prevent excessive sparking."

Eight claims are relied upon. It will be sufficient to quote two of them.

"1. The combination, in a motor for alternating currents, of field-windings, armature coils, commutator, and commutator-brushes arranged at the neutral point, all connected in series, as customary in constant-current motors, and a regulating device for controlling the speed of the motor consisting of a variable resistance permanently in shunt across the armature.

"2. The combination in a motor for alternating currents, of field-windings with relatively high self-induction and armature coils with relatively low self-induction, commutator and commutator-brushes arranged on the neutral point, all connected in series, as customary in continuous-current motors and a variable resistance in shunt with the armature."

The judge who heard the cause at circuit held this patent void for lack of patentable novelty. We are led to the same conclusion, not by any transactions in the Patent Office, nor by construing the language of the specification so as to find in it some "concession," which the patentee did not intend to make, but because of the disclosures of the prior art. The patent shows an alternating-current motor of the direct-current type, with field and armature wound so as to secure the differences in electro-motive force above indicated, with means for regulating speed, not mechanically, but by cutting in and out a series of resistances arranged in shunt with the armature. This precise combination in its entirety was novel; but mere novelty is not invention, when the teachings of the art would naturally lead one skilled therein to produce such a combination whenever an improvement of that sort was required.

We have from the complainants no history of the development of their improvement, and the date assigned to it is that of the application—March, 1899. At that time there were in existence electric motors for dental purposes in all respects, save as to details of winding, the same as the one in suit, operating by direct currents. There were also similar motors operated by alternating currents, and reg-

Digitized by Google

ulated as to speed by frictional attachments. There were also small motors for alternating currents, in which there was no regulation of speed, and which had the precise construction of laminated field and differing windings of field and armature that the patentees describe. These were used as fan motors. Quite possibly the patentees had never heard of them. It would seem from his prima facie testimony that complainant's expert did not know of them till the trial of this suit; but they are none the less a part of the prior art, to be referred to in testing the validity of the patent.

The direct current dental motors gave entire satisfaction and were capable of accurate and complete control in the manner indicated. It was not until the alternating current came into extensive use that there was demand for any other motor. When that time came it was necessary only to apply to the small fan motors the regulating shunt with varying resistances which was already in successful use in direct-current dental motors, without changing or modifying either element of the combination. Did this constitute invention? Would the means employed for regulating the alternating motors, so that their speed would be controlled when operating with or without load be obvious to one skilled in the art? That is a question which can be answered more satisfactorily by those so skilled than by one who is not. When we turn to the record, however, we find a difference of opinion. Defendant's expert insists that it was obvious. Complaints' expert that it was not. Both of them are gentlemen of eminence in their profession. Manifestly one of them only correctly answers the question, and the only thing possible for a court, itself without special technical knowledge of the subject, is to make a careful study of the testimony of both, and accept as controlling that which commends itself as the more persuasive. Upon such study of the testimony of both witnesses, we are of the opinion that the defendant's expert gives the correct answer. It is unnecessary to review in detail such testimony, which is extremely voluminous; but we may indicate a few circumstances which lead us to this conclusion.

Complainant's expert has much to say of the wide differences between direct and alternating currents; the management of the first being a relatively simple matter, while the actions which take place in motors of this type operated by alternating currents are exceedingly complex, so that one cannot say in advance just what will happen when using alternating currents, and certain results, which inevitably follow when using direct currents, do not follow when using alternating currents. It would seem, however, that this very uncertainty as to what would happen would be more likely to induce a skilled person, who had before him the problem of regulating one of these small fan motors so as to make it available for dental purposes, to try the resistance shunt, which already worked well with direct current dental motors. If there is so much uncertainty as to what will happen when alternating currents are applied to direct-current devices, the less chance there is that the "teachings of the art" would turn the skilled person away from what to an unskilled person would seem to be an obvious experiment.

It is argued that there was a long-existing prior demand for alternating-current dental motors, speed-controlled as the Pieper mo-

Digitized by Google

tors are. Satisfactory evidence of this would go far towards indicating patentable invention; but the evidence produced is not satisfactory. Several circulars and advertisements of dental supply houses were put in evidence. They contained statements to the effect that such a motor could not be produced, though efforts were being made to devise one. But the documents are competent only to show that such statements were made, not that the statements were true. For aught that appears they may have been made by dealers who had other types of dental motors which they wished to sell. There is no proof as to what efforts were being made by skilled electricians to solve the problem. The time was so short after the introduction of the direct current dental motor that it would seem the alternating-current motor of the patent was produced as a development due to the gradual extension of the use of commercial alternating currents. The record does not make out a case "where the need has been long apparent and various persons had vainly sought to accomplish the desired result." Electric Railway Co. v. Jamaica Co. (C. C.) 61 Fed. 655.

The later Pieper patent, 721,229, differs from the earlier one only in the substitution of an inductive resistance for an ohmic resistance. The evidence shows that these two varieties of resistance were old and well-known equivalents of each other. The change from one to the other did not involve invention.

The decree of the Circuit Court is affirmed, with costs.

(160 Fed. 933.)

O'ROURKE ENGINEERING CONST. CO. v. McMULLEN et al.

(Circuit Court of Appeals, Second Circuit. January 22, 1908. On Rehearing, April 14, 1908.)

No. 97.

1. PATENTS—INVENTION—EVIDENCE OF INVENTION.

When the court has to deal with a device which has achieved an undisputed success, and accomplishes a result never attained before, which is new, useful and in large demand, it is generally safe to conclude that the man who made it is an inventor.

[Ed. Note.—For cases in point, see Cent. Dig. vol. 38, Patents, § 39.]

2. SAME—INFRINGEMENT—AIR LOCK FOR CAISSONS.

The Moran patent, No. 500,149, for an air lock for caissons in which work is carried on under an air pressure greater than that of the atmosphere, by means of which a bucket can be lowered into and hoisted from the working chamber by a continuous movement, whereas previously two hoists and two sets of tackle had been necessary, discloses invention, and covers a device of great merit and utility. Claim 2, in specifying a valve "closing against" the fall rope, does not include by implication as a necessary part a stuffing box or packing on the valve or a stuffing box on the rope. As so construed, claim 2 *held* infringed. Claim 3 *held* void for lack of invention, and, if conceded, validity not infringed.

3. SAME—SUIT FOR INFRINGEMENT—PLEADING.

That a bill for infringement of a patent alleged infringement in a certain district only, omitting the usual words "and elsewhere," will not prevent the consideration of evidence of infringement outside of such district, where the answer denied infringement in such district or elsewhere, and the pleadings were treated as presenting such issue.

Digitized by Google

4. SAME—INVENTION—AIR LOCKS FOR CAISSONS.

The Barr patent, No. 514,843, for an air lock for caissons, *held* void for lack of invention as to claims 1, 3, 4, 6, and 8.

Appeal from the Circuit Court of the United States for the Southern District of New York.

For opinion below, see 150 Fed. 338.

W. D. Edmonds, for appellant.

Gifford & Bull (I. Edgar Bull, of counsel), for appellees.

Before LACOMBE, COXE, and WARD, Circuit Judges.

WARD, Circuit Judge. This action is brought for infringement of letters patent, No. 500,149, to D. E. Moran, and No. 514,843 to William C. Barr, duly assigned to complainant.

The subject of the controversy is an air lock in combination with a caisson used in construction work at levels beneath the water line, such combination having been long in use. The caisson sinks as excavation continues, the water being kept out by compressed air constantly pumped into the caisson. If the empty bucket were carried directly into the caisson or the full bucket out of it, the compressed air would rapidly escape, and for this reason an intermediate lock or chamber between the caisson and the open air has always been used. Devices whereby pressure in the working chamber could be cut off from the lock, such as a door between the two were familiar. If the bucket were coming from the outer air the door between the lock and the working chamber was closed, the air in the lock was equalized with the atmosphere, the bucket was then introduced in the lock, the air in the lock equalized with that in the caisson, the door between them opened, and the bucket lowered into the working chamber and vice versa when the loaded bucket was coming out. This always involved two separate hoists, one from the caisson into the lock and another from the lock into the open air and vice versa. Moran's was the first lock which permitted the continuous and uninterrupted hoist from the caisson into the upper air and descent from the upper air into the caisson. He accomplished it by passing the hoisting fall through a hole in the center of a two-part gate or valve separating the air lock from the outer air with a device to prevent the undue escape of the compressed air. It was an undoubted improvement, and as such has been generally adopted.

The two claims relied upon are:

"2. The combination in an air lock of a two-part valve with a rope opening at the center with a seat on the inner side of the air lock and a rope at the center against which the valve closes substantially as specified.

"3. The combination in an air lock of a two-part valve opening in the air lock closing against a seat in the inner side of the air lock and a central opening in the valve and stuffing boxes to close the same, substantially as specified."

These claims are not very clear, but we read them thus: 2. (a) Two-part valve; (b) Opening for rope at center of valve; (c) valve seat on inner side of air lock; (d) rope against which valve closes either by means of a stuffing box or packing on the valve or by means of a stuffing box on the rope. 3. (a) Two-part valve; (b) opening for rope at center of valve; (c) valve seat on inner side of air lock; (d) stuffing box on rope. In other words claim 2 is larger and covers all the means

Digitized by Google

mentioned in the specifications of making the central opening air-tight, whereas claim 3 covers only the stuffing box, T, which is carried on the rope.

Claims 1, 3, 4, 6, and 8 of the Barr patent are sued upon. They cover the mechanism that moves the two-part valve doors horizontally, and the first claim may be quoted as illustrative of the mechanism:

"1. An air lock for caissons comprising upper and lower gates, pistons connected to said gates and operating in cylinders and connections between said cylinders and the air-confining cylinder of the caisson whereby said pistons and gates are operated by the air pressure in the caisson, substantially as set forth."

The defendants Richard Deeves & Son had the contract to build an extension to the Manhattan Life Building on Broadway in the city of New York, and they employed the defendant McMullen to do the foundation work. McMullen used two caissons with air locks carrying stuffing boxes on the hoisting fall which concededly infringed the patent sued upon, if valid, but the judge of the Circuit Court found that those two locks were licensed under both patents, and had not been reconstructed as distinguished from being repaired (Shickle v. St. Louis Car Company, 77 Fed. 739, 23 C. C. A. 433; Goodyear Company v. Jackson, 112 Fed. 146, 50 C. C. A. 159, 55 L. R. A. 692) in which conclusions we agree with him, so that they are out of the case. McMullen used two other unlicensed locks, described as the 1901 locks, which were like those in the patents sued upon, except that no stuffing box was carried on the hoisting rope, and no flexible packing was used, metallic bushing in the center opening of the two-part valve being substituted for it. The defendant claims that these locks having never been used in New York City were not covered by the bill, which alleged infringement in New York City only, but, without passing on this question at all, we proceed to inquire whether the claims of the patent sued upon are valid.

Although we have read the claims 2 and 3 of the Moran patent somewhat differently from the judge of the Circuit Court, we have arrived at the same conclusions. If the combination of the rope and a stuffing box carried on the rope with the two-part valves which we think covered by claim 3 is patentable, the answer to the complainant's claim is that the defendants did not use this combination on these 1901 air locks.

Taking up claim 2 we agree with the judge of the Circuit Court that the combination with the two-part valve of flexible packing or of a stuffing box fixed to the two-part valve at the central opening involved no invention. Every element was old. Two-part valves or gates opening upward or downward or horizontally were old; the running of hoisting falls through the center of such gates or valves was old; the location of such gates or valves under pressure against the inside so that the pressure would tend to make them tight was old; packing or stuffing boxes to prevent the escape of steam of heated gases was old. So in the case of the Barr patent, the horizontal gates of the lock were moved by compressed air moving pistons connected with the gates in one direction or the other according as the air was admitted into one end or the other of the cylinders in the usual familiar way.

Digitized by Google

The specifications show that Moran contemplated some sort of packing to make a close joint. McMullen apparently was the first person to discover that the necessary air-tightness could be accomplished by using merely metallic bushing. However, we do not think that the use of either a stuffing box or of flexible packing or of metallic bushing in combination with and fixed in a two-part valve to make the central opening air-tight involved invention. Although Moran and Barr accomplished novel and excellent results, they did so by the application of old means to analogous uses. The decree is affirmed, with costs.

On Rehearing.

On January 22, 1908, we filed a decision affirming the decree of the Circuit Court for the Southern District of New York dismissing the bill founded upon letters patent No. 500,149 to Daniel E. Moran and letters patent No. 514,843 to William C. Barr. On February 3, 1908, the complainant—appellant—filed a petition for a reargument upon two points, viz.:

"(1) That claim 2 of Moran's patent is entitled to cover closure of a naked valve against the naked rope without the intervening 'stuffing box or packing on the valve' or 'stuffing box on the rope' which this court has read into it (see court's analysis of claim 2).

"(2) That said naked closure involves invention."

On February 11th we granted the petition for a rehearing confining it strictly to the two propositions as stated, supra. In our former decision we said:

"The subject of the controversy is an air lock in combination with a caisson used in construction work at levels beneath the water line, such combination having been long in use. The caisson sinks as excavation continues, the water being kept out by compressed air constantly pumped into the caisson. If the empty bucket were carried directly into the caisson or the full bucket out of it, the compressed air would rapidly escape and for this reason an intermediate lock or chamber between the caisson and the open air has always been used. Devices whereby pressure in the working chamber could be cut off from the lock, such as a door between the two were familiar. If the bucket were coming from the outer air the door between the lock and the working chamber was closed, the air in the lock was equalized with the atmosphere, the bucket was then introduced in the lock, the air in the lock equalized with that in the caisson, the door between them opened and the bucket lowered into the working chamber and vice versa when the loaded bucket was coming out. This always involved two separate hoists, one from the caisson into the lock and another from the lock into the open air and vice versa. Moran's was the first lock which permitted the continuous and uninterrupted hoist from the caisson into the upper air and descent from the upper air into the caisson. He accomplished it by passing the hoisting fall through a hole in the center of a two-part gate or valve separating the air lock from the outer air with a device to prevent the undue escape of the compressed air. It was an undoubted improvement and as such has been generally adopted."

Claim 2 is as follows:

"The combination in an air lock of a two-part valve with a rope opening at the center with a seat on the inner side of the air lock and the rope at the center against which the valve closes substantially as specified."

We construed the claim as containing the following elements: (a) Two-part valve; (b) opening for rope or center of valve; (c) valve seat on inner side of air lock; (d) rope against which valve closed ei-

Digitized by Google

ther by means of a stuffing box or packing on the valve or by means of a stuffing box on the rope. It will be observed that the words "either by means of a stuffing box or packing on the valve or by means of a stuffing box on the rope" are not in the claim.

COXE, Circuit Judge. The patent to Moran is for an improvement in air locks for use in work carried on under air pressure greater than that of the atmosphere, known as the pneumatic method. The invention "consists in the combination in an air lock of a valve adapted to close around and open from a rope at or near the center of the valve while the rope is bearing a load." The specification states that prior to the invention it was customary in the construction of underground or underwater works to connect the working chamber with the outer air by a tube or shaft through which access is had to and from the working chamber. For this purpose the air lock was provided with pipes and valves to equalize the pressure in the air chamber with that in the working chamber or with the outer air. In passing material from the working chamber to the outer air it was necessary, when using the old devices, to close the outer door, open the inner door, move the material into the lock and rest it there. The inner door was then closed, the pressure equalized with the outer air and the material hoisted out of the way. This method, when tackle was used, required one tackle to bring the material into the air lock and another to move it from there to the outer air. The purpose of the invention is to do all this in one continuous journey without special appliances, change of tackle or intermediate handling.

No one can read this patent without being impressed with the fact that the inventor is an accomplished engineer thoroughly conversant with the art and impressed with the importance of the difficulties which confronted him. It was no ordinary problem which he undertook to solve. He had to deal with the tremendous force of compressed air in its relation to a continuous passage of the bucket through the lock. The old air locks, hoisting falls and single gates were useless here. Nothing which had been produced before could be utilized to subdue and hold in check the persistent pressure of the air while the journey through the lock was taking place. The lock of the patent in its most minute details was constructed to meet and overcome this difficulty and to treat the problem as one of ordinary mechanics does injustice to the inventor.

Previous to Moran's invention no one had ever taken material through the lock by a continuous hoist. The defendants' expert says:

"No instance has come to my knowledge where material was hoisted straight through prior to the date of the Moran patent."

The idea of doing this was a bold and brilliant one and was at first deemed chimerical and impossible by hydraulic engineering. When, however, it became an accomplished fact, it made a decided sensation among contractors, engineers and builders, and was hailed as "a flash of genius." The Moran locks were at once adopted and are now in general use.

To assert that Moran's invention is anticipated by freight elevators which passed through several stories of a building, the openings on

Digitized by Google

each floor being closed by two-part doors, is tantamount to asserting that he who solves the problem of aerial navigation will be entitled to no credit because similar vehicles with the same motive power have traveled successfully over the land and through the water.

The Kennedy and Scott patent for a blast furnace top seems principally to be relied on, but we are of the opinion that it belongs to a different art, and we fail to see how it imparted any useful information which was not known to all familiar with the old air locks.

Bearing in mind that Moran's invention relates solely to an air lock so constructed that material can be hoisted "straight through" it, and confining it to this feature alone, it may be said truly that there was no prior art. No one had ever done this before, although the necessity for such action was generally recognized. Moran's idea was new and brilliant, and he carried it out by constructing a new air lock bringing together elements, several of which were old, but which were never combined before. In other words, the combination was new and produced a new and highly useful result. To do this, we think, involved invention.

The principal question in such cases is: Has the patentee added anything of value to the sum of human knowledge, has he made the world's work easier, cheaper and safer, would the return to the prior art be a retrogression? When the court has answered this question, or these questions, in the affirmative, the effort should be to give the inventor the just reward of the contribution he has made. The effort should increase in proportion as the contribution is valuable. Where the court has to deal with a device which has achieved undisputed success and accomplishes a result never attained before, which is new, useful and in large demand, it is generally safe to conclude that the man who made it is an inventor. The court may resort to strict and, it may even be, to harsh construction when the patentee has done nothing more than make a trivial improvement upon a well known structure which produces no new result; but it should be correspondingly liberal when convinced that the patentee's improvement is so radical as to put the old methods out of action. The courts have frequently held that one who takes an old machine and by a few, even inconsequential, changes compels it to perform a new function and do important work which no one before ever dreamed it capable of performing, is entitled to rank as an inventor.

In Hobbs v. Beach, 180 U. S. 383, 392, 21 Sup. Ct. 409, 413, 45 L. Ed. 586, the court says:

> "It appears from the testimony that several of these addressing machines, of which that of Dennis and York is a type, and which are now claimed to have inspired the Beach patent, had been upon the market for many years and yet it never seemed to have occurred to any one engaged in the manufacture of paper boxes that they could be made available for the purpose of attaching strips to the corners of such boxes. This very fact is evidence that the man who discovered the possibility of their adaption to this new use was gifted with the prescience of an inventor. While none of the elements of the Beach patent—taken separately or perhaps even in a somewhat similar combination—was new, their adaption to this new use and the minor changes required for that purpose resulted in the establishment of practically a new industry, and was a decided step in advance of any that had theretofore been made."

Digitized by Google

This language is descriptive of the old hoists, elevators and hatchways prior to Moran and may be applied to his achievement with even greater emphasis because Beach had no such force as compressed air with which to contend.

In Magowan v. N. Y. Belting Company, 141 U. S. 332, 12 Sup. Ct. 71, 35 L. Ed. 781, invention was found in placing a rubber back upon the packing for stuffing boxes.

In the Barbed Wire Case, 143 U. S. 275, 12 Sup. Ct. 443, 36 L. Ed. 154, the court decided that the substitution of a wire barb for one cut from an iron plate involved invention.

In Potts & Co. v. Creager, 155 U. S. 597, 15 Sup. Ct. 194, 39 L. Ed. 275, the court held that one who improves an old device so that it is adapted to a different industry, "may draw to himself the quality of an inventor."

In Loom Co. v. Higgins, 105 U. S. 580, 591, 26 L. Ed. 1177, the court says:

> "It may be laid down as a general rule, though perhaps not an invariable one, that if a new combination and arrangement of known elements produce a new and beneficial result, never attained before, it is evidence of invention. It certainly was a new and useful result to make a loom produce 50 yards a day when it never before had produced more than 40."

The keynote of all the decisions is the extent of the benefit conferred upon mankind. Where the court has determined that this benefit is valuable and extensive it will, we think, be difficult to find a well considered case where the patent has been overthrown on the ground of nonpatentability. The so-called 1901 locks, which are alone in controversy, did not have packing or a stuffing box on the rope. Arthur McMullen, one of the defendants, testified that "instead of a stuffing box there had been a bushing put in for the rope to go through. It was an ordinary bushing, it may have been brass and it may have been steel. Its function was to keep the rope from wearing into the doors. Practically the same purpose was subserved by the bushing as by the stuffing box."

Upon reflection we are convinced that we improperly limited the second claim by reading into it the words "either by means of a stuffing box or packing on the valve or by means of a stuffing box on the rope." The claim itself is entirely free from such limitation. In fact, its language negatives such a construction for it describes the rope in the opening at the center of the two-part valve against which rope the valve closes. The argument of the defendants seems to be that the claim, although no language therein supports such a contention, must be limited to some kind of packing. The reasoning is as follows—the claim says that the valve closes against the rope; it cannot close without packing; therefore the presence of packing must be inferred. To the mind of the writer it seems that the direct converse of this proposition is true, i. e., that the valve cannot close against the rope if packing intervenes. Significance must be given to the fact that "a stuffing box to close the central opening" is an element of the third claim, and if we read "a stuffing box" into the second claim the two claims are substantially alike. Such a construction should be avoided unless imperatively necessary. Bresnahan v. Tripp Giant-Co., 102 Fed. 899, 43

Digitized by Google

C. C. A. 48; Thomson-Houston Co. v. Nassau Electric Co. (C. C.) 110 Fed. 647.

It is conclusively demonstrated that when the valve is made to close tightly against the rope no packing is necessary. Why should the inventor, who has unquestionably covered such a construction in the second claim, be deprived of the fruits of his invention when practiced in its simplest and most convenient manner? That the inventor contemplated the use of the unpacked opening is deducible from the language of the claim, if it does not cover such a combination it is a meaningless excrescence. There is nothing in the description or drawings to indicate that the inventor did not intend to claim such a combination, indeed, the contrary is true.

There can be no dispute that figure 2 of the drawings shows the rope bearing directly on the metal sides of the valve hole without stuffing box or packing of any kind. Apparently figures 9 and 10 show the same thing and figures 11 and 12 show a hole through the valve without packing of any kind. Figure 12 shows a single piece upper valve with a slot cut from the periphery to the hole in the center to permit the introduction of the rope into the hole which, as stated, has no packing around it. We are unable to see how this valve could be operated in connection with a stuffing box on the rope. Any doubt as to this drawing showing a naked rope passing through a naked hole is solved by the language of the specification which says:

"The slot is provided with a slide to close the slot, so as to leave passage only for the rope or cable."

Again the patentee, speaking of the two-part valve, says:

"The opening N is made to conform to the rope or cable which is to pass through it. About the hole N I may arrange a stuffing box," etc.

In describing the operation of the lock he says:

"The bucket is lowered into the air lock and the upper valve, K, K', closed, so as to encircle the rope or cable and make a close joint at the meeting edges."

Without quoting further from the specification we think it may fairly be construed to mean that the inventor contemplated a closing of the valve against the rope, this was his preferred construction and he hoped that it would at all times prove sufficient. But it might not; wear and tear, or other causes, might prevent the valve from closing on the rope with sufficient tightness, and so he provided a remedy which the operator may use, viz., the stuffing box and packing. "May" does not mean "must."

The defendants' expert, Mr. Waterman, is apparently in accord with this construction, for he says, after describing the Moran patent:

"The specification also says that lips or flanges are made on the edges to give a more perfect joint as regards holding the air pressure, and also that a stuffing box in two halves may be employed, or flexible packing arranged in some other way, so as to make a close joint with the cable, such construction, however, not being described as compulsory (specification, page 2, lines 112 et seq.)."

Counsel for the defendant say:

"There is not a word in the specifications indicating that packing is absent in the locks of Fig. 2, or Fig. 9, or Fig. 10, or Fig. 11, or Fig. 12."

Digitized by Google

We think, as we have just seen, that there is very much to indicate the absence of packing. But, assuming the statement to be correct, the contrary is also true, there is not a word indicating that packing is present. We have, then, a universally recognized improvement in a different and dangerous art, we have a claim which concededly makes no reference to packing of any kind and we have a description and drawings which, let us assume, leave the presence or absence of packing in doubt. Why should the doubt be resolved against the inventor, why should the court be astute to destroy the claim by construction when it can be sustained by giving to its words their plain and logical meaning?

Counsel contends further that the joint at the rope opening of the second claim must be air-tight, not relatively or sufficiently air-tight, but absolutely air-tight. This contention is based upon the language of the claim—"the rope at the center against which the valve closes." It is said if the valve closes against the rope an air-tight joint must result and such a joint can only be produced by packing. This, we think, is a nonsequitur, neither justified by the language used nor supported by the description. To one unskilled in the technicalities of the art it seems manifest that a stuffing box or packing could not be used where the valve closes against the rope. In describing the lower valve Moran says:

"On the upper surface of the valve, W, between it and the seat, V, I may arrange a gasket of rubber or other material."

This language clearly indicates that this valve may close against its iron seat or may have rubber interposed to make it more air-tight. No packing is suggested for the upper valve, and, indeed, it could not be used in the construction shown in figure 9, for the sliding doors would rub it off. "The upper valve fits against a continuous circular valve-seat, B." If, then, naked iron contacting with naked iron around the entire inner surface of the lock can make a sufficiently air-tight joint, why should it have been thought incredible that steel and iron contacting in the comparatively negligible rope opening should make an operative joint? The construction contended for, if consistently carried out, would require us to read packing into the claim on every part against which the valve closes. This, as we have seen, is, as to the upper seat at least, impossible.

Moran must have known that absolute air-tightness was not attainable in such a large and rough structure as his air lock and that a small escape of air did not destroy its efficiency He knew or, at least, he may have known, that the slight leakage between the wall of the center opening and a tightly fitting steel cable would be negligible. He arranged his lock, even to the most minute details, with all this in mind. He evidently intended to provide for all contingencies, including a rope opening initially too large and also one made too large by the wear on the rope and valve. He therefore provided a stuffing box and packing for use whenever excessive leakage made their use necessary.

As the counsel for the defendants says in his original brief:

"Any intelligent mechanic would know enough to use packing to make an air-tight joint between two metal surfaces, if the joint were not tight enough

Digitized by Google

without it. * * * It does not appear that any one who ever built an air lock was so deficient in common sense as to * * * omit packing where packing was desirable."

And he might have added, with equal truth, "or to put packing in where it was undesirable." Because Moran endeavored to provide against emergencies he should not be deprived of the fruits of his invention when practiced in its most simple and obvious form. The novel feature is not the rope, or the rope opening, or the two-part valve, or the valve seat; but it is the combination of all of these elements which produced a new air lock doing what no other air lock ever accomplished before.

That the 1901 locks infringe the second claim if unrestricted by the limitations placed upon it in our former decision, is too obvious to require discussion.

The contention that these locks cannot be considered because infringement as to them is not pleaded is properly disposed of by the judge of the Circuit Court, and we agree with him in what he says regarding it. The argument rests upon the omission to aver in the bill that infringement occurred "at New York City in the Southern district of New York and elsewhere"—the words "and elsewhere" being omitted. But the defendants denied that they had infringed "at New York City or elsewhere," and the case was tried in all respects as if the question were properly presented by the pleadings. It would be a hardship to all concerned to subject them to the expense and annoyance of a new action when the addition of the two words "and elsewhere," will make the bill criticism proof.

We do not understand that the defendants Deeves are in any way connected with the 1901 locks.

The decree is reversed without costs in this court to the complainant but with costs in this court to the defendants Deeves on both patents and with costs to the defendant McMullen on the Barr patent alone. The cause is remanded to the Circuit Court with instructions to enter the usual decree, based upon the second claim of the Moran patent, against the defendant McMullen without costs and to dismiss the bill. with costs as to all the other defendants.

Digitized by Google

(160 Fed. 657.)

CHRISTY v. SCHWARTZCHILD & SULZBERGER CO.

(Circuit Court of Appeals, Seventh Circuit. February 7, 1908. Rehearing Denied May 6, 1908.)

No. 1,407.

APPEAL AND ERROR—REVIEW—INSUFFICIENCY OF RECORD.

To authorize the reversal of a judgment error must clearly appear, and, where, on the trial of an action by a servant against the master to recover for a personal injury, the plaintiff as a witness was permitted to "indicate" his position at the time of the injury by signs and gestures which do not appear in the record, but which may have been important or even vital upon the issue of contributory negligence, the action of the trial court in directing a verdict for the defendant cannot be reviewed.

[Ed. Note.—For cases in point, see Cent. Dig. vol. 3, Appeal and Error, §§ 2911–2915.]

In Error to the Circuit Court of the United States for the Northern District of Illinois.

This is an action to recover damages for an injury to plaintiff in error caused by the falling of an elevator in the packing house of defendant in error. The trial court sustained a motion to direct a verdict for defendant, and the record is brought here for review by writ of error.

The ground of liability asserted is that defendant did not provide a safe working place or safe appliances, and that the elevator operator was incompetent, and known to be so by the master, and was not properly instructed in his duties. The casualty itself was the catching of the plaintiff in the coils of the elevator cables, caused by their being suddenly straightened out by the falling of the car. Plaintiff was a rigger, working at machinery hoisting, and was the elevator cable man, the rope man, whose duty was to put cables on drums, mend cables, test and repair elevator signals, hoist machinery, etc. He was not a millwright, and had nothing to do with repairing the elevator machinery. The elevator is the Barth electric freight lift, supported by two three-quarter inch steel cables running over a drum, and two other like counter balance cables. It had been under repair two weeks. Two safety devices, known as the "guide grips" or "safety clutch" and the "slack-cable device," serve to stop the car or cut off the power when required. The safety clutch or guide grips consist of castings, eccentric in form, called "dogs," a spring and levers under the car, etc. When the device is in working order and the descent of the car is arrested by the grips, they will not let go until properly released, but at the time of the accident they held for a time and then suddenly and unexpectedly let go. The car dropped and the injury followed. The slack-cable device served to automatically disconnect the electric motor and the spool or drum on which the elevator cables were wound, and when in working order was held in proper position by the vertical cables hanging from the drum and supporting the weight of the elevator. If for any cause these cables became slack, as by stopping the elevator by the guide grips without stopping the cable drum, the slack-cable mechanism would fall to the floor, and by its weight turn an arm or lever so as to disconnect motor and drum, and thus prevent further unwinding. The elevator operator knew how to start and stop the car. His prior work was yarding cattle. Four days before the accident he was put on the elevator, spending a day, as one witness says, and three hours, as he says, learning to work it. At the time of the accident, the millwrights were trying to repair the elevator. Manhoff and Schmidt were the millwrights. They had been experimenting with the safety clutch for some time, but could not get it to work properly, and Manhoff went to the elevator shanty, above the upper floor, to examine the machinery there.

When Manhoff reached the elevator shanty, he found the slack-cable device out of order. He took it to the shop, had some bent parts straightened, brought it back, and replaced it. He did not properly tighten the set screws holding the arm which turned off the power, as every time the car stopped while descend-

Digitized by Google

ing, from the imperfect action of the safety clutch, it was necessary to take up the slack cable by having the operator turn the handle in the car. The slack-cable device does not appear to have worked at all after Manhoff replaced it, and for some reason which does not appear he did not adjust it at the time it was replaced by him. Such was the situation immediately before the accident. The elevator was not being used for work, but only for experimenting with the repairs. The safety dogs under the car were stopping it every few feet on its down trip, and then letting go. The slack-cable device was not working, and the loose cables were being taken up under Manhoff's orders by turning the wheel in the car for an upward movement.

Manhoff returned to the motor shanty, continuing his efforts to get the elevator machinery in proper condition. Seeing plaintiff coming from another part of the building, he called him to see if the cables were of the same length. Plaintiff examined them and pronounced them all right. He knew that repairs were being made, and that he was called because there was something wrong with the machinery. Finding there was nothing wrong with the cables, Manhoff ordered the elevator down, and plaintiff instead of going on about his own work, staid by. The car descended a few feet, and the same thing happened as so often before. The safety dogs gripped the guide, stopped the car, and the slack-cable device fell to the floor, but failed to disconnect the motor and drum. The drum kept turning and the cables unwound. The operator did not turn off the power with the car wheel, but allowed the cables to unwind until Manhoff shouted down to him to shut off the power, which he did. By this time the cables had unwound about 15 feet, and lay coiled and twisted on the floor in front of the drum at the side of the motor like a huge snake. As soon as the drum stopped, Manhoff threw out the switch and cut off the electric current from the motor. He and the plaintiff then started to straighten out the cables so as to rewind them on the drum. Manhoff stood at one end of the drum and plaintiff near the other end, in front of and about a foot from it, and at the side of the motor. Manhoff asked what was the matter with the clutch or brake, which is a device holding the drum fast, and preventing it from being turned back. As they were preparing to rewind the cable, it was necessary to release this device. Plaintiff stooped over towards the drum and just as he did so the safety clutch under the car let go, the elevator fell, the cables straightened out with great force, catching plaintiff by the legs, breaking both of them, and causing a permanent injury through consequent atrophy of the muscles of the right leg.

It does not appear just how the cables caught the plaintiff, or whether he was standing within their coils. He says they unwound around him, in around him and alongside of him, and that he did not change his position at any time before the accident. "Before the car fell there was no cable around me or in front of me." "It was right alongside of me, the right side as I was facing the drum." He further testified that he assisted Manhoff to straighten out the cables, so far as to get his hands on them and pull them. After he was caught in the cables he says; "My feet were in this shape [indicating] and my head was like that [indicating]. I should judge my feet were two feet or so above the floor. I was laying on my side like that [indicating]." By reason of this inexcusable fault of permitting a witness to "indicate" something which cannot possibly be preserved in the record, it is impossible to get any clear notion of just how the accident really happened. Manhoff says that plaintiff had gotten up on the base of the drum, about six inches above the floor, looking at the brakes, when the car fell, and that there was no cable where he was standing, right near him, and that he himself was standing within two inches of the cable as it lay on the floor. Plaintiff further testified that the cable was coiled up in the shape of the letter U.

The trial court directed a verdict for the defendant on the ground that plaintiff was a volunteer, that the only negligence for which the master could be charged was that of a fellow servant, and that plaintiff was guilty of contributory negligence.

Simon Kruse, for plaintiff in error.
John D. Black, for defendant in error.

Digitized by Google

Before BAKER and SEAMAN, Circuit Judges, and SANBORN, District Judge.

SANBORN, District Judge (after stating the facts as above). The work being done at the time of the accident was repairing. The elevator was not in use, except to experiment with the repairs. Plaintiff was called by the millwright to learn if the cables were properly placed on the drum. Having completed this, his duty ceased, and his staying to assist further was repair work, and made him a fellow servant with the millwright, assuming the risks of that service. Reed v. Moore & McFerrin, 153 Fed. 358, 82 C. C. A. 434. If the elevator operator had been incompetent for want of instructions or other cause known to the employer, and his negligence had caused the injury, plaintiff would not have assumed that risk; but he was instructed, and, so far as appears, competent to run an elevator when in repair, and his failure to prevent the unwinding of the cables was the remote cause, the proximate cause being the defective clutch in process of repair.

The condition in which the record comes to us makes it also necessary to hold the plaintiff chargeable with contributory negligence. Plaintiff was permitted to "indicate" and "illustrate" his testimony by signs and gestures which are not explained, but which were entirely intelligible to the trial court. It thus happens that important, perhaps vital, evidence is not before us. If this evidence were here, it might be clear from the way plaintiff was caught in the cables that he carelessly placed himself in a dangerous position. To authorize reversal error must clearly appear. The trial court, with all the evidence before it, directed a verdict for defendant. Some of the evidence being omitted we cannot say this was error. Consolidated Stone Co. v. Summit, 152 Ind. 297, 53 N. E. 235. Although the bill of exceptions is certified to contain all the evidence offered, heard or taken at the trial, yet the omission of matters apparent on its face, which might have been controlling of the decision below, must lead to affirmance of the judgment.

The judgment is affirmed.

(157 Fed. 347.)

MISSOURI, K. & T. RY. CO. v. COLLIER.

(Circuit Court of Appeals, Eighth Circuit. October 17, 1907. On Rehearing, December 23, 1907.)

No. 2,533.

1. EVIDENCE — WEIGHT — CREDIBILITY OF WITNESSES — CONTRADICTION BY PHYSICAL FACTS.

Where the testimony of a witness is positively contradicted by the physical facts, neither the court nor the jury can be permitted to credit it.[1]

2. MASTER AND SERVANT—RULES OF RAILROAD COMPANY—VIOLATION BY EMPLOYÉ—CONTRIBUTORY NEGLIGENCE.

It is settled law that a railroad company may make reasonable rules for the government of its employés in the operation of trains, and an act of one employé, unauthorized by, or contrary to, such rules cannot justify another employé in disregarding an established rule, nor relieve him from

[1] See note at end of case.

Digitized by Google

the charge of contributory negligence, where his disregard of such known rule results in, or contributes to, his injury.

[Ed. Note.—For cases in point, see Cent. Dig. vol. 34, Master and Servant, §§ 759–775.]

3. SAME—INJURY TO EMPLOYÉ.

The rules of a railroad company provided that "a signal imperfectly displayed, or the absence of a signal where a signal is usually shown, must be regarded as a stop signal"; that "in all cases of doubt or uncertainty the safe course must be taken and no risks run"; and that "firemen as well as enginemen must watch signals as well as switches carefully, as frequently the first view can be had from the firemen's side." Plaintiff, who was a fireman on a passenger train of such company, on approaching a station at night, at which the train did not stop, observed when from one-half of a mile to a mile distant that there was no light displayed at a switch stand on the engineer's side of the track where there should be a light. He also saw near the station the engine of a freight train facing him with the headlight hooded, as required by the rules when such train was out of the way of an approaching train. He claimed also that some one at or near the station gave a "high ball" signal by moving a lantern up and down, which indicated "proceed" under the rules. The giving of any such signal was denied by the crew of the freight train, and was not authorized by the rules to be given to a train approaching a station. Plaintiff took no action whatever, and did not communicate what he had seen to the engineer, and the train passed upon a siding through the switch, which was open, and ran into a section of the freight train, and in the collision the engineer was killed and plaintiff injured. *Held*, that in failing to act on the absence of a light at the switch, which under their rules was a stop signal, plaintiff was guilty of contributory negligence, which precluded his recovery from the company; that he was not relieved from such charge by the unauthorized high ball signal, if given, nor by the fact that it was also the duty of the engineer to see and obey the stop signal.

4. SAME—PROXIMATE CAUSE OF COLLISION.

In such case, the proximate cause of the wreck was not the absence of a light from the switch, but the fact that the switch was improperly open, the responsibility for which was a question of fact in issue.

5. APPEAL—PRESENTATION OF QUESTIONS FOR REVIEW—MOTION FOR JUDGMENT NOTWITHSTANDING VERDICT—FAILURE TO ASK DIRECTED VERDICT.

Where a defendant fails to request a directed verdict at the close of the evidence, the refusal of the trial court to enter judgment in his favor notwithstanding an adverse verdict will not be held error by the appellate court.

Hook, Circuit Judge, dissenting.

In Error to the Circuit Court of the United States for the Western District of Missouri.

This is an action for personal injury, growing, substantially, out of the following state of facts:

The defendant in error, hereinafter for convenience designated the plaintiff, was in the employ of the plaintiff in error, hereinafter for convenience designated the defendant, as fireman on passenger train known as the "Katy Flyer." He had been in the employ of the defendant as fireman for about 15 months prior to the accident, and had for a considerable time prior to this service worked as a fireman on the Missouri Pacific Railroad. The accident occasioning the injury in question occurred at Lewis Station, in Henry county, Mo., at 1:28 o'clock a. m. of the night of September 23, 1904. The train was coming from the south going north, and was due to pass this station at about 12 o'clock that night. This train was not scheduled to stop at that station. Its usual time was fast, running from 40 to 45 miles an hour.

An order had been issued the evening of that night, for the information of other trains and crews on the road, that the "Flyer" would be an hour

Digitized by Google

and a half late at Lewis Station, and for all other crews to govern themselves accordingly. On that night there was a south-bound freight train of the defendant running so as to meet said "Flyer" at said station. Arriving at the station some time prior to the arrival of the "Flyer," the freight train had to shift from the main to the side track to give free passage on the main track. On the west side of the main track was what was known as the "passing" track, 2,334 feet between the head blocking switches. On the east side of the main track, nearer to the south end of the passing track, was the depot building. On the east side of the depot was another track, diverging from the main track, known as the "house" track, which is about 1,430 feet between the head blocks. The freight train passed on to the passing track. It became evident to the conductor, after taking observations from the top of the cars, that there was not sufficient space on this siding to stand clear of the main track at both ends, and he would therefore have to pass the south switch in order to clear the north switch with the rear end of said freight train. Accordingly he notified the head brakeman, named McCarty, to open the south switch to allow the engine and the front part of the train, consisting of seven cars, to pass out on to the main line, which McCarty promptly did. To meet this situation the engine and seven cars were cut off from the train, which left the balance of the train clear on the passing track. After the engine and seven cars had passed the south switch out on to the main track, the plan was to back these detached cars with the engine onto the "house" track. To accomplish this movement it was necessary for McCarty to throw the south switch to permit the seven cars and the engine to back through said switch north on the main track. This he did, and signaled the engineer when accomplished. The switch at the junction of the main track and the house track stood about 300 feet north of the south switch connecting the main track and the passing track, over which the seven cars and engine had just passed. The conductor of the freight train attended to the throwing of this house track switch so as to admit the cars and engine thereon. As soon as the seven cars and engine had passed onto the house track, the conductor threw the switch over which they had just passed so as to make a clear main track. As these cars backed through the south switch McCarty, standing some 10 or more feet to the north of it, discovered that there was a hot box on the rear of the seventh car of this short train, and he immediately started toward the conductor at the switch of the house track to inform him of this fact; but on account of a ditch running parallel with the railroad track the walking was difficult, and as soon as the engine in backing had passed him he immediately followed it up on the track, within 10 feet of the engine as it backed, according to his testimony, until he reached the conductor, and informed him about the hot box.

When this short train had thus passed backward and northward through the south switch onto the main track, there was no occasion for setting that switch for the free passage of the north-bound passenger train; and his testimony is that he never touched this switch after setting it for the movement of the backing of the engine and seven cars, and was not at it after he so followed up the backing train. In this he is confirmed by the fireman on the engine on the backing train, who testified that he saw McCarty going forward toward the house track switch as the engine backed north of the south switch; and the conductor confirms him in making the report to him of the hot box immediately after the engine passed through the house track switch. The conductor and the other brakeman on this car with McCarty were engaged, after the train stopped, in and about rectifying the hot box. The conductor and the other brakemen being engaged on the car, McCarty was directed to go forward to the engineer and inform him of the situation, and not to move the train until he received the signal therefor. As McCarty was thus passing to deliver this message to the engineer, the whistle of the "Flyer," coming from the south for this station, was heard, and it reached the south switch and crashed into the south end of the freight train standing on the passing track about the time McCarty reached the engineer with his message. The engine and one car at least were derailed on the passing track, and others of the north-bound passenger train were derailed on the main track, furnishing evidence that the south switch was so adjusted as to admit the engine

Digitized by Google

onto the passing track. As a result of that collision the engineer on the passenger train was killed, and the fireman (Henson Collier, the defendant in error) received personal injuries of a more or less serious character. When the engine and seven cars were left standing on the house track, the engine, being at the south end of said cars, was hooded, as required by the rules of the company.

While said passenger train was so approaching the south switch the engineer and fireman of the freight train were at their posts on the engine, and no lanterns were being used by any of the crew of the freight train, according to their positive testimony, except as they had been employed in the movements of switching the freight train, and in and about the repairs being made on said hot box. And their testimony was that none of them were on the main track after they thus passed onto the house track, and none of them employed a lantern on the main track thereafter for any purpose. The evidence further tended to show that after the accident the south switch was found to be thrown and locked for the passing track.

In order to show a condition existing at the time, in and about Lewis Station, from which it might be as reasonably inferred that the switch had been tampered with and so set after McCarty left it as that McCarty himself so re-adjusted it, the defendant introduced evidence tending to show that for several weeks prior to this accident there was a general strike of telegraph operators along the line of the defendant's railroad, and that as an outgrowth thereof considerable difficulties and interruptions of the transaction of defendant's business had occurred at Lewis Station; that the wires had been grounded so as to confuse and interfere with train orders; that trains had been held at that station for considerable time, not being able to depart therefrom until the men could get in telephonic communication with the train dispatcher at Sedalia, Mo.; that for some time, and up to within a few days before the wreck occurred, printed matter had been circulated by these strikers along the line of defendant's road and on its trains warning the public not to patronize the defendant's road, because of its dangerous condition. And there was evidence to the effect that keys to the switch locks were sometimes carried off by brakemen or lost, and thereby could easily get into the possession of parties not entitled to them. Other essential facts will appear in the opinion of the court. On trial to a jury the plaintiff was awarded a verdict for $15,000.

George P. B. Jackson, for plaintiff in error.

Edwin Silver (C. C. Lawson, Sangree & Bohling, and Silver & Brown, on the brief), for defendant in error.

Before SANBORN and HOOK, Circuit Judges, and PHILIPS, District Judge.

PHILIPS, District Judge (after stating the facts as above). In the original petition, filed November 4, 1904, the negligent acts imputed to the defendant as the basis of recovery were: (1) the failure of the agents and servants in charge of said freight train to so adjust and set the south switch at Lewis Station as to permit the passenger train to pass through; and (2) the failure to have "a light at said switch so as to enable the plaintiff to see whether or not said switch was properly adjusted and set." The defendant answered this petition on the 25th day of November, 1904. Thus the issues stood until the third Monday in March, 1906, when the plaintiff filed an amended petition, alleging as further grounds of negligence that the defendant so hooded the headlight on the freight engine where it stood on the house track as not to disclose that the track at the station was not clear and unobstructed for passing trains; and, further, that as the passenger train approached said station the defendant's agents and serv-

Digitized by Google

ants carelessly and negligently signaled to the agents and servants of the passenger train to come ahead on the main track. The answer to the amended petition, after admitting that the plaintiff was in its employ as such fireman, tendered the general issue, and alleged contributory negligence on the part of the plaintiff.

On the trial the plaintiff put in evidence the rules of the defendant company, among which are the following:

"General Notice.

"To enter or remain in the service is an assurance of willingness to obey the rules.

"Obedience to the rules is essential to the safety of passengers and employés, and to the protection of property.

"General Rules.

"A. Employés whose duties are prescribed by these rules must provide themselves with a copy.

"B. Employés must be conversant with and obey the rules and special instructions. If in doubt as to their meaning, they must apply to proper authority for an explanation.

"C. Employés must pass the required examinations.

"D. Persons employed in any service on trains are subject to the rules and special instructions.

"E. Employés must render every assistance in their power in carrying out the rules and special instructions.

"F. Any violation of the rules or special instructions must be reported."

"Signal Rules.

"8. Flags of the prescribed color must be used by day, and lamps of the prescribed color by night.

"9. Night signals are to be displayed from sunset to sunrise. When weather or other conditions obscure day signals, night signals must be used in addition.

Color.	Indication.
(a) Red	Stop.
(b) White	Proceed, and for other uses prescribed by the Rules.
(c) Green	Proceed with caution, and for other uses prescribed by the Rules.
(d) Green and White	Flag stop. See Rule 28.
(e) Blue	See Rule 26.

Hand, Flag and Lamp Signals.

Manner of Using.	Indication.
(a) Swung across the track.	Stop
(b) Raised and Lowered vertically,	Proceed.

"17. The headlight will be displayed to the front of every train by night, but must be concealed when a train turns out to meet another and has stopped clear of the main track, or is standing to meet trains at the end of double track or at junction points."

Digitized by Google

"Use of Signals.

"27. A signal imperfectly displayed, or the absence of a signal where a signal is usually shown, must be regarded as a stop signal, and the fact reported to the superintendent or train master."

"106. In all cases of doubt or uncertainty the safe course must be taken and no risks run."

"345. Firemen as well as enginemen must watch signals as well as switches carefully, as frequently the first view can be had from the fireman's side."

The plaintiff testified that the time card in which were printed all the rules for the government of the employés was delivered to each member of the crew, and he had the time card then in force, from which the above extracts of the rules are copied. When he entered the service of the defendant company he made application for employment containing statements as to his qualifications, after which he made acknowledgment and agreement as follows:

"I hereby acknowledge receipt of a copy of the rules and regulations for the government of employés of the M. K. & T. Railway Company and all amendments thereto, and a copy of the current time table, and agree to familiarize myself with and observe the same and to keep advised of such amendments to said rules as may hereafter be made."

He testified that he had complied with this statement, and had kept himself informed as to the rules governing the duties of firemen and other trainmen.

The plaintiff in his own behalf testified that on approaching Lewis Station from a half to a mile therefrom he had a full view of the station; that he perceived the presence there of the engine on the freight train, and could tell from the light coming out from the sides of the hood that the engine was hooded. He further testified that at that distance he discovered there was no light on the switch stand or at the switch; that he saw the lantern, and it was not lighted where the evidence showed such signal light was customarily displayed. He knew that under the requirements of rule 27 "a signal imperfectly displayed, or the absence of a signal where a signal is usually shown, must be regarded as a stop signal." He therefore had warning that his train ought to stop at the very gateway of the passage through Lewis Station; and the evidence was that at the distance where he discovered the absence of the signal light there was ample time to have so checked up the train as to have avoided the accident. The rule of the company furthermore declared that "firemen as well as enginemen must watch signals as well as switches carefully, as frequently the first view can be had from the fireman's side." He neither heeded the warning signal of the absence of a light at the switch, nor did he speak to the engineer calling his attention to the fact. This was culpable negligence on his part. St. Louis & San Francisco Railroad Co. v. Dewees, decided by this court, 153 Fed. 56, 82 C. C. A. 190.

To excuse himself from this failure to observe a known, positive rule of his employer, the observance of which would have prevented this disastrous accident, it seems to have occurred to him a year and five months after stating his grievances against the defendant company, predicated alone of the improper adjustment of the south switch and the absence of any light thereat, that he was enticed into the dan-

Digitized by Google

ger trap by reason of the fact that as he approached the station he saw, as he thought, on the main track near the station, a "high-ball" signal, which he assumed to have been given by some employé of the railroad company, which he understood meant to come ahead.

Viewed merely as a question of fact, the burden of proof devolved upon the plaintiff to show that if such signal was given it was by some servant or agent of the defendant, and under circumstances for which the law would attach liability therefor to the defendant company. It challenges the credulity of the intelligent mind that if the plaintiff observed and acted on such signal, so conspicuous a fact was not uppermost in his mind when he first imparted to his counsel the facts for drafting the original petition. On the contrary, it does not appear to have been communicated by him to his attorneys for about a year and a half after the accident. On the other hand, every employé of the company in and about the station testified that no one of them gave any such signal at the time and place. This is confirmed by the detailed, harmonious statements of all of them as to how they were engaged and occupied at the time. The engineer and fireman on the freight train were at their station on the engine, the conductor and the two brakemen were occupied in preparing for and working at the hot box, and McCarty was sent therefrom with a message, demanding haste and attention, to the engineer on the engine, and before that commission was executed the "Flyer" approached and crashed into the freight train.

The improbability of such high-ball signal having been given by any such employé is accentuated by the fact that there was no conceivable reason why such signal should have been given. The freight train crew, beyond the possibility of debate, assumed that the main track was clear for the passing through of the "Flyer." And there was no rule of the company imposing upon any employé of the defendant any such duty. The work and duty of the freight train crew were about their own train. They had no other duty to perform toward the incoming train than to clear the main track, set the switches therefor, and hood the engine.

The plaintiff introduced a witness named Bogard, whose residence was about 300 feet from where the conductor and the switchmen were occupied about the detached engine and cars, who, remarkably enough, chanced to be outside of his house at that hour of the night. He testified that about the time of the coming of the passenger train he observed the up and down motion of a lantern over towards the south switch of the main track. As the cars on the house track stood between him and the main track, the physical facts render his testimony too utterly incredible for any court to suffer it to be the basis of a verdict and judgment. Where a witness' testimony is positively contradicted by the physical facts, neither the court nor jury can be permitted to credit it. Gurley v. Railroad, 104 Mo. 211, 16 S. W. 11; State v. Dettmer, 124 Mo. 426, 27 S. W. 1117; McLachlin v. Barker, 64 Mo. App. 511; Kelsay v. Railroad, 129 Mo. 362, 30 S. W. 339; Huggart v. Railroad, 134 Mo., loc. cit. 679, 36 S. W. 220; Payne v. Railroad, 136 Mo. 583, 38 S. W. 308; State v. Gurley, 170 Mo., loc.

Digitized by Google

cit. 432, 70 S. W. 875; Petty v. Railroad, 179 Mo. 666, 78 S. W. 1003; Waters-Pierce Oil Company v. Van Elderen, 137 Fed. 557, 70 C. C. A. 255.

It is but just, perhaps, to this witness to say that as he went out into his yard about 12 o'clock the light he saw was in connection with the movement of the freight train and the passing thereabout on the house track of the crew with lanterns in their hands; and he confused these with the instant of the coming in of the passenger train.

If it be conceded that these matters should have been submitted to the jury, the important question is, was the fact of the appearance of the high-ball signal sufficient as matter of law to render the defendant company responsible for the plaintiff's injury? "When a railroad company has deliberately adopted a system of rules, which have been made familiar to its employés, and its railroad is operated under them, the reasonableness and sufficiency of these rules are questions of law, and not of fact. These questions must be determined by the court, because there is no other way in which a set of rules may ever be established or adjudicated as either reasonable or sufficient." Little Rock & M. R. Co. v. Barry, 84 Fed. 944, loc. cit. 949, 28 C. C. A. 644, 43 L. R. A. 349.

As an artificial being, like a railroad, has no eyes to see, no ears to hear, no mouth to speak, no hands to act, it can only exercise such faculties and exert its powers through the instrumentality of its managing officers and their employés. For the performance of its functions, the betterment of the service, the protection of its property and the lives and limbs of its employés and the passengers committed to its care, it is authorized to prescribe reasonable rules and regulations, and to insist upon their faithful observance and enforcement by its employés. This is well expressed in Lake Erie & W. R. Company v. Craig, 80 Fed. 495, 25 C. C. A. 585:

"The doctrine that the master, operating a complicated and dangerous business, may and must make reasonable rules for the guidance and safety of the employés, that the employé must yield obedience, and takes upon himself the consequences of disobedience, is a doctrine that is eminently wise, and founded upon the highest considerations of justice and humanity. The master's right to protect himself from heavy pecuniary liability in the operation of a large business is most important. His duty, by suitable regulations, such as are suggested by experience, to protect as far as may be the servant from risk of injury to himself as well as injury from a fellow servant, for which the master is not pecuniarily liable, and for which there is practically no remedy, is a duty justly imposed by law. And the still higher considerations of the preservation of human life, and the prevention of serious physical maiming and disability with the attendant suffering and the impairment of usefulness, furnish the fullest support and sanction to the doctrine. And the law knows no such incongruity as holding the master to the duty of making, with the right of making, without at the same time requiring from the servant full conformity to, the regulations."

In Wolsey v. Railroad Company, 33 Ohio St. 227, the court said:

"These companies are held to a severe line of responsibility for the acts of their servants, upon the idea that the act of the servant is the act of the master, because the master has told the servant exactly what to do, and he has done it. Certainly the whole law, qui facit per alium, etc., depends upon the idea of obedience to orders. The conduct of a gigantic corporation, with hundreds and thousands of employés, is not unlike that of an army. Its en-

Digitized by Google

tire action depends upon the fact that the commands emanating from authority are to be complied with by every one subordinate to that authority."

The defendant had prescribed the signal at the very switch where this accident occurred. While a light at the switch showing certain colors on the disk was required by the rule, a white light indicating safety, red to stop, green to proceed cautiously, the defendant anticipated the very contingency which arose in this instance, the possibility from some cause or other that the light which should be there might be broken, displaced, extinguished, or negligently omitted by the person entrusted with its care; and therefore, as a precautionary measure, it prescribed that "a signal imperfectly displayed, or the absence of a signal at a place where a signal is usually shown, must be regarded as a stop signal." Notwithstanding this rule was known to this fireman, and notwithstanding he discovered the absence of any light from one-half to one mile from the station, he elected to rely upon the high-ball signal, merely supposed by him to have been given by some person in the yard beckoning him to come on. On the witness stand the following occurred on cross-examination of the plaintiff:

"Q. Can you turn to any place in these rules which says that such a signal shall be given for a train approaching a station along the switches that they use there? A. No, sir. Q. Don't you know there isn't any such thing? A. I know; but they do do it sometimes. Q. You know there is no such provision in the rules? A. Yes, sir."

On the other hand, all the crew, witnesses on behalf of the defendant, testified that there was no such usage or custom, for the palpable reason that such signals were used in the movement of trains on sidings, and consequently ought not to be confused by application to an incoming passenger train. And to this end, the evidence showed that a bulletin order had some years prior thereto been issued by the company prohibiting such use of signals; but the plaintiff testified that he was not aware of such bulletin. The defendant company, however, had done all it could to have its rules observed in respect of its signals.

It would be an intolerable doctrine that forsooth some of the employés of the railroad company sometimes gave a signal, not prescribed or sanctioned by the employer, it might be followed, not at the risk of the employé but that of the master. No such sporadic act of the employé, unauthorized by and unknown to the master, could constitute a precedent for disregarding an established rule. Abel v. President, 103 N. Y. 581, 9 N. E. 325, 57 Am. Rep. 773; Russell v. Richmond & D. R. Co. (C. C.) 47 Fed. 204. In A., T. & S. F. R. Co. v. Reesman, 60 Fed. 370, 378, 9 C. C. A. 20, 23 L. R. A. 768, Mr. Justice Brewer said:

"The duty of obedience to the rules of the employer is one resting alike upon all employés; and when an employé claims to recover from his employer for injuries resulting through the latter's negligence, he cannot escape the consequences of his own act contributing to such injury—an act done in known violation of the rules of such employer—on the ground that his immediate superintendent knew and assented to such act of violation. If it were otherwise, then the supineness and negligence of any superintending officer of a corporation would relieve a subordinate from responsibility for his own conduct. In other words, the wrong of one employé is excused by a like wrong

Digitized by Google

of another. The employé injured through his own omission of duty escapes liability for such omission because some other employé is equally careless. The question has not infrequently arisen whether knowledge and assent on the part of the conductor, or other official on the train, of a violation of one of the rules of the company by a passenger, relieves the latter from the burden of contributory negligence arising from such violation, and the response has almost uniformly been in the negative. It is true that in some cases the party injured was not an employé, subject to the control of the officer whose knowledge and assent to the violation was relied upon as an excuse, but the principle underlying is the same. The question is not one of obedience to orders, but of a compliance with rules; and, generally speaking, the duty of compliance is not waived by the mere fact that some controlling official has knowledge of the failure to comply."

In respect of this issue in the case the defendant made the following request for direction to the jury:

"The court instructs you that under the plaintiff's evidence the second ground of negligence, namely, signaling to the passenger train to come ahead on the main track, cannot be regarded as the cause of the accident in which the plaintiff was injured, and there can be no recovery in this case on that ground."

This the court refused, but in its charge said to the jury:

"You should further consider any fact, if you find it to be a fact from a preponderance of all the testimony, any signal that might have been given by any party to direct the passenger train to proceed."

This, it will be observed, did not even require that the jury should find that the signal was given by any servant or agent of the defendant, but if given by any party it might be considered in forming a verdict.

Criticism is made of this request in that it asserted that such signaling cannot be regarded as the cause of the accident, as it is inconsistent with the contention of defendant's counsel that the heeding of the signal by the plaintiff caused the injury, and because it contained more than a single proposition. The position of defendant's counsel is that no such signal was given by any servant or authority of the defendant, and if given could not be regarded as the cause of the accident, for the palpable reason that the more direct cause of the injury was the known disregard by plaintiff of a positive rule of his employer. The contributory negligence asserted by the defendant is that the injury resulted from the plaintiff's failure to observe one of its published rules known to him. If he saw fit to act upon some other notice, unauthorized by the defendant, such as the claimed high-ball signal, the contributing cause to the accident was the failure to heed the absence of the target light.

Moreover, the defendant further requested the court to charge the jury "that the only ground of negligence alleged in the petition which you can inquire into in this case is the first one to the effect that the agents and servants of the defendant had failed and omitted to properly set and adjust the switch for the passing track."

As the court gave the request made by defendant that permitting the freight train to stand on the side track with the headlight of the engine hooded afforded no ground of recovery, as that was done in compliance with a known, published rule of the company, the only question left in the case was as to the setting of the switch and the failure to

Digitized by Google

maintain a light thereon. As will be shown hereafter, the failure to have such light there was not the cause of the accident.

It is suggested that the defendant did not frame its requests in such form as to have them separately given, but put them rather in the form of a connected charge, to be given totidem verbis as a unit. The requests as made contained separate and distinct propositions of law, based on several independent grounds of negligence alleged in the petition; and the bill of exceptions shows that the court granted the request in respect of the fourth ground, that is, as to the hooding of the engine, "but as to the second and third grounds of negligence the court refused the requests made by the defendant," setting out these requests separately as above stated and exceptions were saved to the refusal of each request. And the court evidently regarded them as separate and independent requests for he said in his charge:

"Certain requests in matters of law have been made by counsel for the respective parties. I have given such as I deem appropriate in this charge which I am now giving you, and therefore refuse the requests made."

Counsel for plaintiff very ingeniously undertake to escape from the dilemma of the plaintiff acting upon the high-ball signal rather than the warning given him by the absence of the switch light, by suggesting that as the engineer as well as the fireman was in position to have observed the absence of any light at the switch no negligence is imputable to the plaintiff for not warning the engineer in charge of the throttle and the lever. The authorities cited in support of this contention (Aerkfetz v. Humphreys, 145 U. S. 418, 12 Sup. Ct. 835, 36 L. Ed. 758; Hutchinson v. Railroad Company, 161 Mo. 246, 61 S. W. 635, 852, 84 Am. St. Rep. 710; New York Central & H. R. R. Company v. McGrath, 151 Fed. 436, 80 C. C. A. 666) have no application to an instance like this, where the rule of the company required that "firemen as well as enginemen must watch signals as well as switches carefully, as frequently the first view can be had from the fireman's side," and, further, "in all cases of doubt or uncertainty the safe course must be taken and no risks run." What would be the sense or meaning of such a rule, if after the fireman, as a result of his vigils, discovered a warning signal, he should then shut his eyes and his mouth, and go on to impending death or injury, on the accountability to him of the company for his life or his limbs, and possibly those of every fellow servant and passenger under his protection? The clear meaning and purpose of imposing such obligation upon the fireman was to safeguard the property of the railroad company, and the lives and limbs of the crew and passengers against the possible oversight or neglect of the engineer.

The distinction between this and the case of St. Louis & San Francisco Railway Company v. Bishard, 147 Fed. 496, 78 C. C. A. 62, is so palpable as hardly to justify discussion. That case was based largely upon the proposition that there was no evidence showing that as a matter of fact the fireman discovered the absence of any light at the switch board, and because of the further fact that owing to the position of the switch board from his side of the engine, and the fact that at the particular instant his duties called his attention away from such

Digitized by Google

observation, contributory negligence on his part was not inferable. Whereas, in the case at bar, the plaintiff's own testimony showed affirmatively that he did discover the absence of the light from a half to a mile distant, and he took no action on that information whatever, when the evidence shows that the speed of the train could have been so slackened within a quarter of a mile as to have prevented the accident. See in this connection St. Louis & San Francisco Railway Company v. Dewees, supra.

In respect of the third ground of negligence, the defendant requested the court to charge the jury as follows:

"That under the plaintiff's evidence, consisting of his own testimony and the rules introduced in connection with his testimony, the absence of a light from the switch had the same effect and was to be treated the same as a red light, and was a warning to the men on the passenger train to stop; and therefore the absence of the light from the switch cannot be regarded as negligence which was the proximate cause of the injury to plaintiff, and there can be no recovery on that account."

The first part of this request, as we have already shown, was but declaratory of the express rule of the defendant company. The absence of the light was equivalent to a warning then given to the engineer and fireman to stop. The absence of the light was not the proximate cause of the injury. It did not cause the collision. This is obvious as but for the improper adjustment of the switch the engine of the passenger train would not have run into the freight cars standing on the siding or passing track. Viewed independently of the contributory negligence of the plaintiff, if the switch had been properly set, the accident would not have occurred, even though the engineer and fireman had proceeded regardless of the absence of any light.

Notwithstanding the defendant may have been entitled to an instructed verdict on the issue respecting the condition of the south switch, it is not in position to complain, for the reason that it did not make such request at the close of the evidence before the submission of the case to the jury. The verdict was returned on the 23d day of March, 1906, and not until the 27th day of that month did the defendant file motion for new trial, and also a motion that the court enter judgment for the defendant notwithstanding the verdict. In this jurisdiction no error is predicable of the action of the trial court in denying a motion for new trial. We are not disposed to encourage the practice of a party in taking chances with the jury for a favorable verdict, and when disappointed at the result four days thereafter asking the court, in effect, to set aside the action of the jury and enter a verdict for one of the parties.

It results that the judgment of the circuit court must be reversed, and the cause remanded, with direction to proceed in conformity with this opinion.

HOOK, Circuit Judge (dissenting). Taking the verdict of the jury as settling, for an appellate court, facts supported by substantial evidence and reasonable inferences therefrom, this is the case: A southbound freight train of the railway company reached the village of Lewis, Mo., shortly after 1 o'clock at night, and was then cut into two

Digitized by Google

parts, one of 44 cars including the caboose, and the other of the engine and 7 cars, and disposed upon sidings to leave a clear main track for a fast north-bound passenger train due to pass through the station shortly afterwards. The switches connecting the sidings with the main track were used in the movement of the freight train. When all was apparently in order the passenger train approached the station at a speed of from 40 to 45 miles an hour. It was running under special orders, had the right of way, and was to pass without stopping. When the passenger train reached the south switch which had been manipulated by one of the freight brakemen, it was diverted from the main track to one of the sidings and crashed into the end of the 44 cars. The engineer was killed, and the fireman was injured. After the wreck it was discovered that the brakeman of the freight train, instead of leaving the switch lined up with the main track, had thrown it for the siding and locked it with the spring lock used in such cases. The action was brought by the fireman to recover damages for his injuries. Under the Missouri law, controlling here, the criminal negligence of the brakeman was chargeable to the railway company, that is to say, the fact that he was a fellow servant of the injured fireman does not prevent recovery. So far this would seem to be a clear case. but it is said the fireman was guilty of contributory negligence because there was no signal light at the south switch where one should have been. The fireman perceived that fact, and under a rule of the company the absence of the light was a stop signal which he should have obeyed. It is true there was no signal light at the switch. The company had intrusted the maintenance of the switch lights at Lewis Station to a boy 11 years of age, and his excuse for the default was that the section foreman paid no attention to his requests for signal oil, and being without it he had left the lamps at his father's store in the village. It is also true that a rule of the company provided that the absence of a signal at a place where one is usually displayed is a stop signal. But this is what the fireman saw as the passenger train approached the station: He saw that a freight train was there and had apparently been arranged so as to insure safety to the passenger train. He saw a faint line of light around the headlight of the freight engine fronting south, showing that it had been covered in accordance with a rule of the company to indicate that the train was clear of the main track. He saw the lights of the trainmen about the station grounds, and that one of them signaled the approaching train by raising and lowering his white lantern vertically, a signal commonly called the "high-ball," which under a rule of the company meant "proceed." Had there been a lighted lamp at the switch showing red down the track, it would have been a danger signal; had it shown white, it would have indicated safety. Concisely stated, these are the facts in the case, with one important exception to which I will refer hereafter. I will not discuss the evidence further than to say that a careful study of the record has convinced me that it was clearly sufficient to authorize the jury to find the facts as narrated above. Should we who are not triers of the fact say as matter of law that the fireman was guilty of negligence contributing to his injury because, observing the

Digitized by Google

absence of a light at the switch, he acted upon the information imparted by the shrouded headlight and the signal to proceed?

Of course rules and the observance of them are necessary for the safe operation of a railroad, but the problem presented to the railroad man is always a practical, never a scholastic, one. If he stopped to split hairs he would be useless in the service. He is required to act quickly, frequently in emergencies, and always in the light of conditions surrounding him at the time. Under the controlling law of Missouri the company was responsible to plaintiff for the conduct of the trainmen of the freight train, of the boy who left the signal lamps at his father's store, and of the section foreman who neglected to give him oil; and I think that in this case, peculiarly circumstanced as it is, such a condition of affairs was presented to the plaintiff as prevents us from saying as matter of law that he was negligent.

It is fairly debatable whether the signal given by the covered headlight that the freight train on the sidings was clear of the main track was not false and misleading, the fact being that a switch used by it in taking the siding and lying between it and the on-coming train was so thrown as unavoidably to cause a collision. True, the freight train was in the clear in the sense that none of its cars physically encroached on the main track, but was that all that the shrouded headlight signified? Is it unreasonable to say that such a signal meant the freight cars were out of the way of the passenger train? In fact the main line was not passable. With the switch thrown as it was the freight cars on the siding became an obstruction that meant a wreck, as much so as if they had been left standing on the main track itself.

Again, the "high-ball" signal was clearly a false and misleading one. It is said that such signal is not intended for a train on the main line when approaching a station. It is true the rules do not say it is. Neither do they say it is not. They do say, however, that a signal given by vertically raising and lowering a lamp signifies "proceed," and the use of the signal is not limited in the rules. A natural and practical construction of this rule by railroad employés, making it applicable to the situation as plaintiff saw it, was abrogated, it is said, by a bulletin of the company; but the bulletin, if there was one, was not brought to plaintiff's attention, and he was not charged with knowledge of it. As to him the bulletin never existed. I apprehend the case would not have been different if the trainman who gave the "high-ball" signal had, instead, hung his white lamp at the misplaced switch to take the place of the light usually displayed there. So far as the rules shown in the record are concerned, the information conveyed by one was also conveyed by the other. For aught the plaintiff knew, the "high-ball" signal to proceed was given by one of the trainmen having possession of the station grounds for the very reason that there was no light at the switch. We should look at the case, not with that wisdom which comes after the accident, but from the standpoint of a man, reasonably intelligent and careful, knowing the rules and under duty to obey them, who, being confronted by the conditions which the plaintiff observed, is called upon to act.

I come now to the remaining feature of the case, and it may be assumed in considering it that no "high-ball" signal was given as claimed

Digitized by Google

by the plaintiff. It is said in the opinion of the court that the fireman "neither heeded the warning signal of the absence of a light at the switch nor did he speak to the engineer calling his attention to the fact. This was culpable negligence on his part." I think there is an error in this. There is nothing in the record indicating that the fireman did or did not impart his knowledge to the engineer. It being his duty to do so, I doubt that it is our right to presume in the absence of evidence that he did not perform his duty. Rather, the presumption is that he did his duty. More than this, the question pertains to a defense of contributory negligence, and if the failure to inform the engineer is important in this respect, it was the duty of the company to show it by evidence. The burden of proof is not sustained by the absence of evidence. I pass by the fact that the passenger train approached the station upon a straight track, that the switch stand from which the signal light was missing was upon the engineer's side, and that his opportunity to discover its absence was even better than that of the fireman. If there is no presumption that the engineer was not informed by the fireman of the absence of a light, then the logic of the court's opinion is that in order to escape the imputation of contributory negligence the fireman should have jumped from the engine or wrested control of it from the engineer. Yet we all know that the fireman is subordinate to the engineer and subject to his orders.

Although the railway company did not ask the trial court for a directed verdict, nevertheless the clear import of the foregoing opinion is that there should have been no recovery. This being so, I am constrained to express my dissent.

On Rehearing.

PHILIPS, District Judge. The first proposition advanced in support of this petition, when reduced to its essence, is that as no objection was interposed in limine either to the predication of a right of recovery respecting the alleged giving of the "high-ball" signal, and no objection was made by the defendant to the introduction of evidence by the plaintiff in support thereof, the defendant was precluded from asking the court to withdraw its consideration from the jury, and that the jury would therefore be warranted in predicating a verdict thereon. This proposition is not even builded on sand. As the matter which rendered unavailing the "high-ball" incident was found in the rules of the company, and those rules were not pleaded by the plaintiff, no objection predicated thereon could have been made by the defendant at the inception of the case. In presenting a prima facie case the plaintiff tendered proof of the case as presented on the face of the pleadings, without disclosing the existence of the rules of the company in question. Those rules did not come into the case until introduced by the defendant in developing its defense. When the evidence closed with both facts before the court touching this issue, the defendant had its first opportunity of raising the question of law as to the effect of this proof. As shown by the opinion of the court, this was promptly raised by request for a declaration of law. This was the opportune and proper way of presenting it to the court for

Digitized by Google

consideration. We adhere to what is said in the majority opinion as to the law applicable to the plaintiff's alleged reliance upon the "high-ball" signal.

The other ground upon which a rehearing is urged is that the majority opinion erred in holding that the plaintiff was guilty of contributory negligence in not warning the engineer of his discovery of the absence of any signal light at the switch. It is but mimic war to place the soldiers of the adversary in an indefensible position and then demolish them. It was neither stated nor assumed in the majority opinion that where the engineer in charge of the engine neglects to keep vigil and take notice, whereby the train is wrecked, his negligence should be imputed or carried over to his fireman. Nor was it asserted that the failure of one workman to warn his fellow workman of a danger as obvious to the latter as to himself would charge him with a responsibility for the inattention or recklessness of the other. The gist of the ruling of this court was and is that where, under the rules of the master, as in this case, the duty was imposed upon the fireman to keep a vigilant lookout for signals established by the master at switches on approaching a station, equal with that imposed upon the engineer, it was designed as a cumulative means of security to the train, and that, under such a known, positive obligation laid upon the fireman, he was as much bound as the engineer to take immediate action on discovering the danger to avoid it, and therefore it was his own direct negligence to stand mute and inactive, depending upon the observation and exertion of the latter to save him, when he saw and knew that the engineer was dashing heedlessly on to certain death. In other words, he was as much responsible for his silence and non-action under such circumstances as a fellow traveler, of equal authority with the driver of a vehicle, who heedlessly drives onto a railroad track, and is thereby injured, without protest or effort by the fellow traveler to avoid the danger. Davis v. C., R. I. & P. Ry. Co., 88 C. C. A. 488, 159 Fed. 10, recently decided by this court.

Clearly enough the record discloses: (1) That the plaintiff merely assumed that the engineer saw what he terms the "high-ball" signal; and (2) that he knew the engineer was paying no heed to the absence of the light at the switch. He testified as to what occurred between him and the engineer at the time; that after the engine whistled for the station, about a mile off, they saw the train on the siding, and the lights about it, and what he conceived to be the "high-ball" signal. Also:

"Q. Well, now state what occurred? A. And he told me—he said: 'Get down and get busy. We got to use her across here.' Q. What did he mean by that? A. Use the steam on the engine. Q. What did he mean by you getting busy? A. Well, he meant for me to get down and put in a fire. Q. Put in coal? A. Yes, sir. Q. Go ahead. A. So I got down and put in the first fire then, and just put in a light fire, two or three scoops of coal, and shut the door. When I put in the second fire he jumped off the seat box and says: 'My God, jump!' I kind o' looked up at him. I was bent over the door, or stooped down. I looked at him, and as I did I seen him jump out the gangway. At about that time the engine gave a lunge and throwed me right over on his side."

He had testified that he discovered from one-half to one mile back that there was no light on the switch stand; and then after the fore-

Digitized by Google

going testimony he testified that from the time he saw the "high-ball" signal until the collision "it couldn't have been but a few seconds." The conclusion, therefore, is inevitable that, notwithstanding the discovery by him of the absence of any light at the switch, the engineer went on directing the plaintiff to fire up, which he did up to "but a few seconds" before the collision, knowing that the engineer was not taking heed of the absence of the switch light by his not slowing up.

We feel profoundly impressed with the supreme public importance of holding the employés of railroads, in positions such as occupied by engineers and firemen in charge of trains, to a rigid accountability for the observance of the reasonable and wise rules of the company in the running of its trains. Such rules enter into the conditions of the employment and the consideration of the higher wages they receive. They should diligently keep and observe them, designed, as they are, not only for the protection of the master's property, but of the lives and limbs of the multitude of people intrusted to their constant vigilance and carefulness. It is a matter of common notoriety that a very large per cent. of the frightful disasters, carrying death and destruction in their wake, on the railroads of the country, is attributable to the inattention of those in charge of the operation of the trains to explicit rules and orders of the managing officers. Such disasters will not be lessened by awarding damages to those whose inattention to such rules of the master contribute to the misfortune.

The petition for rehearing is denied.

HOOK, Circuit Judge, dissents.

NOTE.

Credibility of Witnesses or Parties Testifying as Question for Jury.

I. In General.

[a] The credibility of witnesses is a question for the jury.

—(U. S. 1868) Huchberger v. Merchants' Fire Ins. Co., Fed. Cas. No. 6,822 [4 Biss. 265]; (1873) Union Sugar Refinery v. Matthiesson, Fed. Cas. No. 14,399 [3 Cliff. 639, 2 Fish. Pat. Cas. 600];

(Ala. 1848) Moore v. Jones, 13 Ala. 296; (1905) Southern Industrial Institute v. Hellier, 39 South. 163;

(Ark. 1905) Mallory v. Brademyer, 89 S. W. 551;

(Colo. 1881) Finerty v. Fritz, 6 Colo. 137;

(Dak. 1882) Territory v. Egan, 3 Dak. 119, 13 N. W. 568;

(Fla. 1895) White v. Ross, 35 Fla. 377, 17 South. 640;

(Ga. 1860) Strozier v. Carroll, 31 Ga. 557; (1875) Mixon v. Pollok, 55 Ga. 321; (1898) Mills v. State, 30 S. E. 778;

(Ill. 1862) Kelly v. People, 29 Ill. (19 Peck) 287; (1871) Valandschoot v. Adams, 61 Ill. 368; (1875) Paton v. Stewart, 78 Ill. 481; Stampofski v. Steffens, 79 Ill. 303; (1887) Singer Mfg. Co. v. Price, 26 Ill. App. 415; (1895) Hanke v. Cobiskey, 57 Ill. App. 267; (1902) Quincy Gas & Electric Co. v. Bauman, 104 Ill. App. 600, judgment affirmed Same v. Baumann (1903) 67 N. E. 807; (1902) Supreme Tent of Knights of Maccabees of the World v. Stensland, 105 Ill. App. 267; (1903) Peterson v. Fullerton, 106 Ill. App. 237;

(Ind. 1835) De Camp v. Stevens, 4 Blackf. 24; (1881) Johnson v. Wiley, 74 Ind. 233; (1906) Siebe v. Heilman Mach. Works, 77 N. E. 300; (1908) Southern Ry. Co. v. Limback, 85 N. E. 354;

Digitized by Google

(Iowa, 1908) Mitchell v. Chicago, R. I. & P. Ry. Co., 114 N. W. 622; Rhodes v. Des Moines, I. F. & N. Ry. Co., 115 N. W. 503;
(Kan. 1875) Shellabarger v. Nafus, 15 Kan. 547;
(Ky. 1890) Ellis v. Schlentker (Super.) 11 Ky. Law Rep. (abstract) 999; (1892) Hammill v. Louisville & N. R. Co., 93 Ky. 343, 20 S. W. 263; (1898) Louisville & N. R. Co. v. Peltier, 45 S. W. 518; (1908) Louisville Bridge Co. v. Allen, 107 S. W. 1191, 32 Ky. Law Rep. 1209; Cincinnati, N. O. & T. P. Ry. Co. v. Evans' Adm'r, 110 S. W. 844;
(Me. 1856) Parsons v. Huff, 41 Me. 410;
(Md. 1827) Morris v. Brickley, 1 Har. & G. 107; (1854) Townshend v. Townshend, 6 Md. 295;
(Mass. 1809) Amory v. Fellows, 5 Mass. 219; (1821) Tucker v. Welsh, 17 Mass. 160, 9 Am. Dec. 137; (1875) Kane v. Learned, 117 Mass. 190;
(Mich. 1881) Nicholson v. Dyer, 45 Mich. 610, 8 N. W. 515; Mawich v. Elsey, 47 Mich. 10, 8 N. W. 587, 10 N. W. 57; (1884) Fallon v. Grand Portage Copper Min. Co., 55 Mich. 147, 20 N. W. 878; (1904) Payne v. Union Life Guards, 99 N. W. 376, 11 Detroit Leg. N. 59;
(Mo. 1842) Henry v. Forbes, 7 Mo. 455; (1870) Kelly v. United States Express Co., 45 Mo. 428; (1872) Moore v. Pieper, 51 Mo. 157; (1874) Durkee v. Chambers, 57 Mo. 575; (1881) Mechanics' Sav. Institution v. Potthoff, 9 Mo. App. 574, memorandum; (1882) State v. Kotovsky, 11 Mo. App. 584, memorandum; (1884) Coudy v. St. Louis, I. M. & S. Ry. Co., 85 Mo. 79; (1888) St. Clair v. Missouri Pac. Ry. Co., 29 Mo. App. 76; (1894) Haynes v. Town of Trenton, 123 Mo. 326, 27 S. W. 622; Olfermann v. Union Depot R. Co., 125 Mo. 408, 28 S. W. 742, 46 Am. St. Rep. 483; (1897) Downing v. Missouri, K. & T. Ry. Co., 70 Mo. App. 657; (1899) Hester v. Fidelity & Casualty Co. of New York, 78 Mo. App. 505; (1901) Wolfe v. Supreme Lodge Knights and Ladies of Honor, 160 Mo. 675, 61 S. W. 637; Cravens v. Hunter, 87 Mo. App. 456; (1903) State v. Peebles, 178 Mo. 475, 77 S. W. 518; (1904) Glasscock v. Swafford Bros. Dry Goods Co., 106 Mo. App. 657, 80 S. W. 364, reversing judgment on rehearing, Same v. Swofford Bros. Dry Goods Co. (1903) 74 S. W. 1039; (1905) Woodard v. Cooney, 85 S. W. 598;
(Neb. 1907) Neeley v. Trautwein, 113 N. W. 141;
(N. J. 1904) Acolia v. Elizabeth, P. & C. J. Ry. Co. (Sup.) 57 Atl. 257; (1908) Kearns v. Waldron, 69 Atl. 960;
(N. M. 1887) Territory v. O'Donnell, 4 N. M. (Johns.) 66, 12 Pac. 743;
(N. Y. 1848) Merritt v. Lyon, 3 Barb. 110; (1884) McGinnis v. Smythe, 50 N. Y. Super. Ct. (18 Jones & S.) 103; (1906) Goodwin v. Sommer, 49 Misc. Rep. 552, 97 N. Y. Supp. 960; (1907) New York Evening Journal Pub. Co. v. William F. Simpson Advertising Agency (City Ct.) 56 Misc. Rep. 347, 106 N. Y. Supp. 858, judgment affirmed Same v. William F. Simpson Advertising Co. (Sup. 1908) 110 N. Y. Supp. 391; (1908) Gelderman v. Curtis, 124 App. Div. 919, 108 N. Y. Supp. 681;
(N. C. 1901) Gwyn Harper Mfg. Co. v. Carolina Cent. R. Co., 128 N. C. 280, 38 S. E. 894; (1903) Hinson v. Postal Telegraph Cable Co., 132 N. C. 460, 43 S. E. 945; (1904) Craft v. Norfolk & S. R. Co., 136 N. C. 49, 48 S. E. 519; (1908) Smith v. Atlantic & C. Air Line Ry. Co., 61 S. E. 575;
(Pa. 1876) Wilson v. Neshannock Iron Co., 33 Leg. Int. 445; Prowattain v. Tindall, 80 Pa. (30 P. F. Smith) 295; (1895) Mewes v. Crescent Pipe Line Co., 170 Pa. 369, 32 Atl. 1083; (1896) McClane v. People's Light & Heat Co., 178 Pa. 424, 35 Atl. 812; (1898) Berger v. Hatton, 7 Pa. Super. Ct. 414; (1901) Bassett v. City of Easton, 200 Pa. 514, 50 Atl. 158; (1902) Cobb v. Metropolitan Life Ins. Co., 19 Pa. Super. Ct. 228; (1904) Dinan v. Supreme Council Catholic Mut. Ben. Ass'n, 210 Pa. 456, 60 Atl. 10; (1906) Bartlett v. Rothschild, 214 Pa. 421, 63 Atl. 1030;
(Tex. 1859) Coats v. Elliott, 23 Tex. 606; (1880) Wood v. Samuels, 1 White & W. Civ. Cas. Ct. App. § 922; (1907) Walker v. Erwin, 106 S. W. 164;
(Va. 1810) Harrison v. Brock, 1 Munf. 22;
(Wash. 1907) Curtin v. Clear Lake Lumber Co., 91 Pac. 956; (1908) Herbert v. Hillman, 96 Pac. 837;
(W. Va. 1908) Parkersburg Nat. Bank v. Hannaman, 60 S. E. 242;
(Wyo. 1908) Chicago, B. & Q. R. Co. v. Pollock, 93 Pac. 847.

Digitized by Google

[b] (Ga. 1846) The credibility of books of original entries is to be weighed by the jury, as other evidence, as well as that of the party himself who offers them.—Taylor v. Tucker, 1 Ga. (1 Kelly) 231.

[c] (Ind. 1906) A request on behalf of the party having the burden of the issue for the direction of a verdict in its favor should not be granted, when the verdict must be based on the testimony of witnesses, either wholly or partially.—Stephens v. American Car & Foundry Co. (App.) 78 N. E. 335.

[d] (Iowa, 1907) Where testimony of a party is offered to overcome an unfavorable presumption of law or to satisfy the burden of proof cast on the party offering it, the question of its credibility and weight is for the jury.—McKnight v. Parsons, 113 N. W. 858.

[e] (Ky. 1889) In an action against a railroad company to recover for the killing of stock by one of its trains, the court cannot give a peremptory instruction to find for defendant based on its own evidence, the question of the veracity of the witnesses being for the jury.—Louisville & N. R. Co. v. Vaughn (Super.) 11 Ky. Law Rep. (abstract) 441.

[f] (Ky. 1893) In an action to recover for work done in grading a road under a contract classifying the excavations to be made and fixing the price per cubic yard for each class, it was for the jury to decide whether estimates made by plaintiffs' witnesses after the work was completed were as accurate as those made by defendants' witnesses during the progress of the work, practical engineers testifying that estimates could be made as well after the work was done as while it was in progress.—McFarland v. Pryse (Super.) 15 Ky. Law Rep. (abstract) 207.

[g] (Ky. 1907) The credibility of evidence, in an action against a carrier for loss of freight, which explains the bill of lading received by the shipper and the waybills which went with the freight, is for the jury.—Mussellam v. Cincinnati, N. O. & T. P. Ry. Co., 104 S. W. 337, 31 Ky. Law Rep. 908.

[h] (Mich. 1905) In an action for damages resulting from inferior kerosene sold by defendant, the credibility of the witness who testified as to the official inspection is for the jury.—Stowell v. Standard Oil Co., 102 N. W. 227, 11 Detroit Leg. N. 725.

[i] (Mo. 1903) Where, in an action against a city to recover on grading contracts, plaintiff introduced resolutions authorizing the contracts, and parol evidence that the resolutions were adopted in the manner required to enact ordinances, and were therefore sufficient, though ordinances were required by the city charter, a refusal to declare the law to be that, "under the pleadings and evidence, the verdict must be for plaintiff," was not error, since, unless the evidence is such as to require the interpretation of the court, the court or jury should be left to determine the credibility of the witnesses.—Dalton v. City of Poplar Bluff, 173 Mo. 39, 72 S. W. 1068.

[j] (Mo. 1903) When plaintiff produces parol evidence to support his action, or when defendant has pleaded new matter as a defense, and produces parol evidence to support such defense, the issue of fact should be submitted to the jury. The evidence may all be one way, yet it is for the jury to say whether they believe the witness or not.—Chinn v. Chicago & A. R. Co., 100 Mo. App. 576, 75 S. W. 375.

[k] (N. H. 1842) The weight of the testimony of a grantor who testifies that his own deed was invalid for fraud is for the jury.—Stevenson v. Chapman, 12 N. H. 524.

[l] (N. Y. 1892) Where none of the evidence in a case given either by plaintiff or the other witnesses, including defendant's, would warrant the jury in finding for defendant, the direction of a verdict for plaintiff is not error on the ground that the credibility of plaintiff as a witness in his own behalf should have been left to the jury.—Schmidt v. Garfield Nat. Bank, 64 Hun, 298, 19 N. Y. Supp. 252, judgment affirmed (1893) 138 N. Y. 631, 33 N. E. 1084.

[m] (N. Y. 1893) The fact that what evidence there was came from defendant under plaintiff's examination makes no difference in regard to taking the case from the jury.—Jonasson v. Eames, 67 Hun, 649, 21 N. Y. Supp. 714, judgment affirmed (1894) 142 N. Y. 653, 37 N. E. 569.

[n] (N. Y. 1893) In an action against the manager of a theater for refusing to admit plaintiff on the ground that he was a negro, it is error to dis-

Digitized by Google

miss the complaint at the close of the evidence, where defendant testifies that he did not control the theater on that evening, but that the company giving the performance had control of it, and that defendant requested the doorkeeper to admit plaintiff, as it is a question for the jury whether defendant stated the truth.—Stay v. Dubois, 74 Hun, 134, 26 N. Y. Supp. 240.

[o] (N. Y. 1893) It is error to dismiss a complaint if there is any evidence which might entitle plaintiff to recover, though it is only the testimony of plaintiff, which, considered with the other evidence in the case, does not seem worthy of belief, the credibility of witnesses being a matter for the jury.—Greene v. Miller, 74 Hun, 271, 26 N. Y. Supp. 425.

[p] (N. Y. 1899) In an action for assault, where plaintiff's testimony, if believed, would entitle her to a verdict, and the witnesses for the defense are all employés of defendant, the case is properly submitted to the jury. Judgment, Craswell v. South Brooklyn Ferry & Transportation Co. (City Ct.) 27 Misc. Rep. 822, 57 N. Y. Supp. 827, affirmed.—Craswell v. New York & S. B. Ferry & Steam Transportation Co., 28 Misc. Rep. 487, 59 N. Y. Supp. 554.

[q] (N. C. 1898) Where no part of the evidence introduced by plaintiff on a certain issue is favorable to defendant, and the evidence introduced by defendant is unfavorable to defendant on that issue, it is not error to instruct the jury that, if they believe defendant's evidence, they must answer the issue against defendant.—Williams v. Gill, 29 S. E. 879.

[r] (Pa. 1901) Where the question was one of fact, and a verdict for defendant was warranted if the jury believed the testimony of the defendant and her witnesses, the trial judge could not give binding instructions for the plaintiff, as he would usurp the functions of the jury by declaring such witnesses unworthy of belief.—H. B. Claflin Co. v. Querns, 15 Pa. Super. Ct. 464.

[s] (Pa. 1904) A judge is not warranted in taking from the jury the determination of a question depending on the credibility of witnesses, though the weight of evidence may be sufficient to justify him in setting aside the verdict.—Dinan v. Supreme Council Catholic Mut. Ben. Ass'n, 210 Pa. 456, 60 Atl. 10.

[t] (Pa. 1905) Though there may be but one witness in an action for personal injuries to support the case of plaintiff, and several witnesses for defendant, it is error for this reason to enter a nonsuit.—Bartholomew v. Kemmerer, 211 Pa. 277, 60 Atl. 908.

[u] (Pa. 1905) When proof of a fact depends upon oral testimony, it is the province of the jury to decide under instructions from the court as to the law applicable to the facts, and subject to the salutary power of the court to award a new trial if it should deem the verdict contrary to the evidence.—Colonial Trust Co. v. Getz, 28 Pa. Super. 619.

[v] (S. C. 1843) Where the proof of infancy comes from the defendant, under the general issue, the court cannot, in invitum, order a nonsuit on this proof.—Drago v. Moso, 1 Speers, 212, 40 Am. Dec. 592.

II. Uncontroverted Testimony.

[a] Where a case depends on oral testimony, such testimony must be submitted to the jury, though the testimony is uncontradicted.

—(Kan. 1904) Jevons v. Union Pac. R. Co., 78 Pac. 817;
(Mass. 1908) Lindenbaum v. New York, N. H. & H. R. Co., 84 N. E. 129; Adelman v. Same, Id.
(Mo. 1896) Gay v. Tielkemeyer, 64 Mo. App. 112, 2 Mo. App. Rep'r, 888; (1902) City of Poplar Bluff v. Hill, 92 Mo. App. 17; Hugumin v. Hinds, 97 Mo. App. 346, 71 S. W. 479;
(N. H. 1902) Cohn v. Saidel, 71 N. H. 558, 53 Atl. 800;
(N. Y. 1888) Sherry v. Fredericks, 13 N. Y. St. Rep. 23;
(Pa. 1897) Kircher v. Sprenger, 4 Pa. Super. Ct. 38, 39 Wkly. Notes Cas. 572; (1904) Barnett v. Becker, 25 Pa. Super. Ct. 22.

[b] (U. S. 1898) The testimony of a party on a material issue, though uncontradicted, should be submitted to the jury if his adversary so requests.—Sigua Iron Co. v. Greene, 31 C. C. A. 477, 88 Fed. 207.

[c] (Ala. 1886) In an action to recover on a policy of life insurance, to which misrepresentation as to the age of the insured is pleaded, and the on-

Digitized by Google

ly witness who testifies directly is his father, who testifies on interrogatories, to which is attached his affidavit, taken ex parte by defendant, and showing on its face that an alteration has been made in the figures designating the year of birth, and there is evidence that he is advanced in years, infirm, and of bad memory, and no record was kept of the births of his 10 children, though his testimony is direct, positive, and uncontradicted, and supports the plea of misrepresentation, it is error to charge the jury affirmatively for defendant.—Alabama Gold Life Ins. Co. v. Mobile Mut. Ins. Co., 81 Ala. 329, 1 South. 561.

[d] (Ark. 1905) In an action on an insurance policy, where the evidence of the value of the property destroyed is uncontradicted, and is given without objection, and without the witness being subjected to cross-examination, the question of value need not be submitted to the jury, although the evidence thereof is general in character, and the witness does not show himself qualified to testify thereto.—American Cent. Ins. Co. v. Noe, 88 S. W. 572.

[e] (Ind. 1902) Where competent parol evidence is introduced by both parties to a law action, and the defendant, having the burden of proof, testifies in his own behalf, it is error to direct the verdict in favor of defendant on affirmative matter contained in his pleadings, even though there is no conflict in the evidence, as the question of the credibility of the witnesses and the meaning of the testimony is for the jury.—Jacobs v. Jolley (App.) 62 N. E. 1028.

[f] (Mo. 1895) On an issue as to what was said at a conversation between the parties to an action, from the mere fact that defendant testified to certain statements, which plaintiff did not specifically deny, his attention not having been called directly to them, the question of their truth is for the jury.—Mullally v. Greenwood, 127 Mo. 138, 29 S. W. 1001, 48 Am. St. Rep. 613.

[g] (Mont. 1902) Where, in a suit on an alleged contract, plaintiff alone testifies in support of his case, and his evidence, though uncontroverted, is confusing, it is error to direct a verdict for him, as the jury should determine the weight of his testimony.—Whalen v. Harrison, 67 Pac. 934.

[h] (N. Y. 1862) That the jury may choose to discredit evidence not impeached and not incredible upon its face is no reason for submitting it to them.—Lomer v. Meeker, 25 N. Y. 361.

[i] (N. Y. 1880) Where plaintiff's recovery was wholly dependent on the time when he made a certain payment to a third person, and the proof of that point rested solely on plaintiff's testimony, which was uncontradicted, though there was no improbability in the testimony, it was error for the judge to direct a verdict for plaintiff.—Lesser v. Wunder, 9 Daly, 70.

[j] (N. Y. 1894) Where defendant calls plaintiff as a witness, the rule that the credibility of the testimony of a party, though uncontradicted, is a question for the jury, does not apply.—Hamilton v. Forsyth, 77 Hun, 578, 28 N. Y. Supp. 1016.

[k] (N. Y. 1896) A verdict for plaintiff should be directed where his cause of action is supported by the testimony of an uncontradicted and unimpeached witness not interested in the result of the action.—Decker v. Sexton (Sup.) 19 Misc. Rep. 59, 43 N. Y. Supp. 167.

[l] (N. Y. 1897) The authority of one who inspected an insurance agent's accounts for the insurance company is not a question for the jury, where the inspector testifies that he had the requisite authority, and he is not cross-examined, or contradicted by any evidence on the agent's behalf.—Stevens v. Metropolitan Life Ins. Co. (Sup.) 13 App. Div. 16, 43 N. Y. Supp. 60.

[m] (N. Y. 1900) In an action to recover for goods sold, defendant alleged that the contract was an entire one, and that plaintiff had failed to deliver all the goods which he had contracted to deliver, and that, therefore, defendant was not liable. Plaintiff rested, after stating the quantity delivered, and the price, without testifying as to the original contract. Defendant testified to the entirety of the contract, and his evidence was uncontradicted, and was corroborated in part by an employé of plaintiff and by circumstantial evidence. *Held*, that as the evidence for defendant was uncontradicted, and was not, from its nature, unreasonable, it was proper to direct a verdict for the defendant, though the evidence in his favor was substantially that of one of the

Digitized by Google

parties in interest. Judgment (1896) 40 N. Y. S. 338, 8 App. Div. 227, affirmed.—Hull v. Littauer, 57 N. E. 102, 162 N. Y. 569.

[n] (N. Y. 1900) Where, in an action to subject property to the payment of taxes, the taxpayer testified that such property was purchased with pension money, the fact that his testimony was not contradicted will not warrant the taking of such issue from the jury, since his testimony might have suggested doubt of its truth, which the jury were entitled to determine. Judgment (Co. Ct. 1899) 27 Misc. Rep. 302, 58 N. Y. Supp. 761, reversed.—Strong v. Walton, 47 App. Div. 114, 62 N. Y. Supp. 353.

[o] (N. Y. 1900) In an action on a husband's bond, agreeing to give his wife certain amounts for her support, the husband testified that the party who drew the bond did not urge him to sign, and that he remembered putting his name thereto. The husband and his mother, who signed the bond, testified that she did so voluntarily. There was no testimony to the contrary. *Held*, that there was no question as to the signing of the bond for the jury.—Lawson v. Lawson, 56 App. Div. 535, 67 N. Y. Supp. 356.

[p] (N. Y. 1906) The rule that the credibility of a witness must be submitted to the jury does not apply, where his evidence is not contradicted directly nor by any legitimate inferences, and it is not improbable, surprising, or suspicious.—Electric Fireproofing Co. v. Smith, 113 App. Div. 615, 99 N. Y. Supp. 37.

[q] (Pa. 1847) It is not error to submit a matter of fact to the jury, although all the evidence is on one side, since the credibility of the witnesses is to be determined by the jury, and if their testimony is not believed, the jury must find against the party having the affirmative of the issue.—West Branch Sav. Bank v. Donaldson, 6 Pa. (6 Barr) 179.

[r] (Pa. 1901) In an action by the receiver of an insurance company against agents of the company, where the only witness is one of the defendants who was called as for cross-examination by the plaintiff, and the witness, without contradiction, fully explains and accounts for each and every item contained in an exhibit attached to plaintiff's statement, the court is justified in granting a nonsuit, and in refusing subsequently to take it off.—Wissahickon Mut. Fire Ins. Co. v. Wannemacher, 15 Pa. Super. Ct. 580.

III. Inconsistent Statements.

[a] (U. S. 1899) Although the testimony of a witness upon an issue is not contradicted, where the only person who could have contradicted him is dead, and it is shown that the witness gave inconsistent testimony on a previous occasion, it is proper to submit the issue to the jury.—Chicago G. W. Ry. Co. v. Price, 38 C. C. A. 239, 97 Fed. 423.

[b] (Ark. 1854) Where plaintiff is obliged to rely on admissions of defendant, the jury are the proper judges of his reliability, and may reject such portions, if any, as appear to be inconsistent or rebutted by other evidence.—Adkins v. Hershy, 14 Ark. 442.

[c] (Cal. 1908) Where inconsistency or apparent inconsistency in testimony is developed through cross-examination, it is for the jury to determine whether the witness is unworthy of belief.—Zipperlen v. Southern Pac. Co. (App.) 93 Pac. 1049.

[d] (Ill. 1873) It is for the jury to determine to what extent the credibility of a witness is affected by proof that he has, on former occasions, made statements at variance with his testimony on the trial.—Craig v. Rohrer, 63 Ill. 325.

[e] (Ill. 1902) Where, in an action against a street railway company for injuries, defendant introduced evidence, based upon notes taken in an interview with plaintiff's witnesses immediately after the accident, and on a subsequent interview between such witnesses and defendant's attorneys, which was taken down by a stenographer, tending to contradict the testimony of the witnesses at the trial, whether the witnesses were in fact contradicted was for the jury. Judgment (1901) 95 Ill. App. 314, affirmed.—Chicago City Ry. Co. v. Tuohy, 196 Ill. 410, 63 N. E. 997.

Digitized by Google

[f] (Ill. 1905) The question of the credibility of plaintiff is for the jury, and the fact that she contradicted herself does not justify directing a verdict for defendant.—Chicago & A. Ry. Co. v. Jennings, 217 Ill. 494, 75 N. E. 560.

[g] (Ind. 1897) The fact that a party, in his testimony, is not always consistent in his statements, is a matter for the jury.—Lauter v. Duckworth, 19 Ind. App. 535, 48 N. E. 864.

[h] (Iowa, 1888) Plaintiff's testimony, in an action for injuries received while coupling cars, that he did not know, when he went between the cars to make the coupling, that the rate of speed had not been reduced, was contradicted by his testimony on a former trial. He stated that when he gave that testimony he was still suffering from the injury, and supposed the question in answer to which it was given referred to the time when he alighted from the moving train. *Held*, that his credibility was for the jury.—Henry v. Sioux City & P. R. Co., 75 Iowa, 84, 39 N. W. 193, 9 Am. St. Rep. 457.

[i] (Me. 1897) It is for the jury to consider, in view of all the testimony, whether witnesses are credible and reliable. The court cannot exclude the testimony of a witness because it is inconsistent or inaccurate.—Dunning v. Maine Cent. R. Co., 39 Atl. 352.

[j] (Mich. 1897) Where defendant, as plaintiff's witness, testifies to facts showing her liable, and on cross-examination she testifies another way, claiming she had been mistaken, it is for the jury to determine which statement is true.—Hall v. Murdock, 72 N. W. 150.

[k] (Mich. 1903) Whether witness warned deceased that stairs had been removed is a question for the jury, his testimony on cross-examination and direct examination being different, and deceased, within a few minutes or few seconds after the alleged warning, having rushed into the danger, and been killed.—Preuschoff v. B. Stroh Brewing Co., 92 N. W. 945, 9 Detroit Leg. N. 549.

[l] (Mo. 1904) A statement made by plaintiff in a deposition is not conclusive against him, but when he testifies to a different fact on the trial the question as to which statement is to be accepted as true is one for the jury.—Bond v. Chicago, B. & Q. Ry. Co., 110 Mo. App. 131, 84 S. W. 124.

[m] (Mo. 1908) The credibility of plaintiff's testimony given at the trial, in view of his former testimony contained in a deposition, is for the jury.—Roe v. Metropolitan St. Ry. Co. (App.) 110 S. W. 611.

[n] (Mont. 1897) Where a witness testified, on an issue as to the value of certain horses, that he was then using 18 horses in his business, knew the team in question, guessed he knew pretty nearly the market value of such horses, but did not know the market value of horses, and thought the team worth $250, it was for the jury to determine whether such contradiction detracted from the weight of his testimony.—Holland v. Huston, 49 Pac. 390.

[o] (Neb. 1907) That a witness testifies to matters on cross-examination somewhat inconsistent with his direct evidence does not warrant the court in rejecting it altogether, for it is the province of the jury to determine the credibility of the witnesses and the weight of their testimony.—Steele v. State, 113 N. W. 798.

[p] (N. Y. 1885) Plaintiff was entitled to go to the jury, although the testimony of his witnesses was inconsistent on material points, questions of the credibility of witnesses being peculiarly for the jury.—National Bank v. Mills, 99 N. Y. 656, 2 N. E. 27.

[q] (N. Y. 1898) A plaintiff having recovered a judgment for injuries alleged to have been caused by defendant's negligence, it was held, upon appeal, that he should have been nonsuited, according to his own evidence. Upon a new trial, his evidence was materially different, and made out a prima facie case; but the court, believing his evidence to have been manufactured to meet the former decision, granted a nonsuit. *Held* error; that, whatever the view of the court as to the truth of the evidence, it was for the jury to pass upon it. Judgment (1895) 92 Hun, 219, 36 N. Y. Supp. 274, reversed.—Williams v. Delaware, L. & W. R. Co., 155 N. Y. 158, 49 N. E. 672.

[r] (N. Y. 1898) Where a judgment for injuries alleged to have been caused by defendant's negligence was set aside on appeal on the ground that plaintiff's own evidence showed that he ought not to recover, and on the retrial his

Digitized by Google

evidence met the defects developed by the appeal, a refusal to nonsuit on the ground that plaintiff purposely varied his evidence for the new trial was not error.—Doyle v. Albany Ry. (Sup.) 52 N. Y. Supp. 602.

[s] (N. Y. 1898) On a second trial, after the judgment has been reversed for insufficiency of evidence, the court cannot take it from the jury because it is of the opinion that a witness has amended his testimony given at the former trial, to fit the opinion of the appellate court.—Bradley v. Second Ave. R. Co., 34 App. Div. 284, 54 N. Y. Supp. 256.

[t] (N. Y. 1899) Though, in the first trial of an action for injury by a street car, it appeared that plaintiff walked slowly across the street, without looking, yet where she testified, on the second trial, that, after looking both ways, she walked fast in attempting to cross the street, and the jury might have found that the evidence first given was due to some misapprehension on her part, it was error for the court to dismiss the complaint, since plaintiff was entitled to go to the jury on the question of her credibility.—Hickman v. Nassau Electric R. Co., 46 App. Div. 627, 61 N. Y. Supp. 698.

[u] (N. Y. 1900) Where a decision for plaintiff is reversed on appeal because of certain testimony of his own witness, on which the case turned, and on a second trial such witness gives contrary testimony, apparently to meet the exigency, it is error to direct a verdict for defendant, notwithstanding collateral circumstances strongly confirming the testimony as originally given, since the credibility of witnesses must be first passed on by the jury.—Murr v. Western Assur. Co. of Toronto, 50 App. Div. 4, 64 N. Y. Supp. 12.

[v] (N. Y. 1902) A defendant testified that he consulted certain lawyers at the instance of a third person. He then stated that he did so at his own instance. He later said he did so at the instance of an agent of plaintiff. He also stated that he was uncertain whether the agent referred him to the lawyers before or after the conversation with them, and finally said that it was before. *Held*, that it was for the jury to determine whether plaintiff's agent referred him to such lawyers.—Lytle v. Crawford, 69 App. Div. 273, 74 N. Y. Supp. 660.

[w] (N. Y. 1905) Where, in an action for injuries, plaintiff's evidence warrants an inference that his injuries were due to defendant's negligence without contributory negligence on plaintiff's part, it was error to grant a nonsuit on the evidence of plaintiff's physician that he examined plaintiff on the day of the accident, and found no bruises on him or any apparent discoloration which would indicate that he had received a recent blow, which evidence was at variance with a statement signed by the physician, who explained the inconsistency merely by stating that at the time he signed the statement he was not under oath.—Festa v. New York City Ry. Co. (Sup.) 95 N. Y. Supp. 595.

[x] (N. Y. 1906) Where, in an action for injuries through negligence, defendant called no witnesses to contradict plaintiff's testimony as to the amount he was earning at the time of the accident, but plaintiff's testimony on cross-examination tended to show that he was not earning as much as he stated, the question as to the amount of such earnings was for the jury.—Guyon v. Brooklyn Heights R. Co. (Sup.) 49 Misc. Rep. 514, 97 N. Y. Supp. 1038.

[xx] (Ohio, 1903) Where the testimony of a witness is conflicting, especially where the witness is hostile, if some part of his testimony tends to support plaintiff's claim, it raises a question that should be submitted to a jury.—Stacy v. Norwich Union Fire Ins. Soc., 25 Ohio Cir. Ct. R. 67.

[y] (Pa. 1897) That a witness for plaintiff, on a former trial, made statements contrary to her testimony on the second trial, affects her credibility, but does not authorize direction of a verdict for defendant.—Platz v. McKean Tp., 178 Pa. 601, 36 Atl. 136, 39 Wkly. Notes Cas. 680.

[yy] (R. I. 1904) In an action for injuries to a servant, whether plaintiff, who made inconsistent statements relating to the distance which his hand went into the machine when it was caught, was fairly entitled to belief in his testimony bearing on the merits, was for the jury to decide.—Lebeau v. Dyerville Mfg. Co., 57 Atl. 1092.

[z] (Tenn. 1899) Plaintiff, who had been struck by a street car, testified in an action for damages therefor that he did not look and listen before attempting to cross the track, but in a second trial he testified that he did so look

Digitized by Google

and listen. *Held*, that the jury, and not the court, must determine the credibility of his testimony.—Citizens' St. R. Co. v. Howard, 102 Tenn. 474, 52 S. W. 864.

[zz] (Tex. 1904) Inconsistencies between the testimony of a witness and that which he gave in a former trial are matters exclusively for the jury.—Galveston, H. & S. A. Ry. Co. v. Butchek (Civ. App.) 78 S. W. 740.

IV. CONTRADICTED OR CONTRADICTING TESTIMONY.

[a] (Ill. 1905) The question of the credibility of a witness testifying in contradiction of others is for the jury. Judgment (1904) 117 Ill. App. 183, affirmed.—Chicago Union Traction Co. v. O'Brien, 219 Ill. 303, 76 N. E. 341.

[b] (Ky. 1906) Where several witnesses testified to certain facts and but a single witness contradicted them, the jury had a right to believe the latter witness.—Louisville, H. & St. L. Ry. Co. v. Hall, 94 S. W. 26, 29 Ky. Law Rep. 584.

[c] (Mich. 1904) Where the testimony of a sole witness to a transaction is contradicted in material points by proof of contradictory statements, the issue as to what really occurred is for the jury.—Payne v. Union Life Guards, 99 N. W. 376, 11 Detroit Leg. N. 59.

[d] (Mo. 1897) Where the party on whom the burden rested undertook to discharge the burden by oral testimony alone, it was the duty of the court to submit its credibility to the jury, where the record did not show that the statements of the witnesses were uncontradicted or conceded to be true.—Kohn v. Troll, 72 Mo. App. 321.

[e] (Mo. 1898) The weight of the evidence of plaintiff in a personal injury action is for the consideration of the jury, though her statements are contradictory.—Lamb v. Missouri Pac. R. Co., 147 Mo. 171, 48 S. W. 659, 51 S. W. 81.

[f] (N. J. 1903) Discrepancies or contradictions between testimony of witnesses called by plaintiff cannot avail defendant on a motion for nonsuit.—Kaufman v. Bush, 69 N. J. Law, 645, 56 Atl. 291.

[g] (N. Y. 1893) Where an employé of a party to a suit testifies that his intent in sending a certain bill of lumber was only to give information of what lumber had been sent, since such testimony is to a certain extent contradictory to the bill itself, which is evidence, though not conclusive evidence, of a sale, the credibility of the witness is for the jury.—Crosby v. Delaware & H. Canal Co., 66 Hun, 628, 21 N. Y. Supp. 83, judgment affirmed (1894) 141 N. Y. 589, 36 N. E. 332.

[h] (N. Y. 1896) Testimony of defendant, corroborated by that of his son, does not overcome contradictory testimony of plaintiff so as to entitle him to a dismissal on the merits or direction of a verdict.—McQueen v. Brown (City Ct.) 18 Misc. Rep. 740, 41 N. Y. Supp. 549.

[i] (N. Y. 1899) The court should not nonsuit because of seeming contradictions of the witness on whom alone plaintiff's case depends, where the testimony is capable of a construction by which the inconsistencies may be reconciled.—Crowe v. House of the Good Shepherd (Sup.) 56 N. Y. Supp. 223.

[j] (N. Y. 1902) Where, in an action to recover the penalty of a liquor license bond because of illegal sales, the testimony of plaintiff is limited to that of the special agents, who were the purchasers, who give improbable testimony, and who are positively disputed by defendant as to every statement concerning him, and by the carpenter who built a door which they testified did not exist, the question of the credibility of such agents should be submitted to the jury.—Cullinan v. Furthman, 70 App. Div. 110, 75 N. Y. Supp. 90.

[k] (Pa. 1902) Plaintiff's case, as made out by himself, though contradicted by one of his witnesses and all of defendant's, is for the jury.—Todd v. Philadelphia & R. Ry. Co., 201 Pa. 558, 51 Atl. 332.

[l] (Pa. 1905) Where the plaintiff's testimony in chief is such as to make a case for the jury, though without corroboration, and contradicted by the defendant's witnesses, and even by his own, it must, unless on cross-examination facts are submitted fatal to his claim, be submitted to the jury, since they may believe his testimony rather than that of his witnesses who contradicted him; and, if portions of the testimony of any witness appear inconsist-

Digitized by Google

ent, confusing, or contradictory, it is for the jury to settle the doubt arising from its character in this respect.—Kitler v. People's St. Ry. Co., 27 Pa. Super. Ct. 602.

[m] (Tex. 1903) Whether plaintiff in an action for personal injuries contradicted his testimony given on a former trial is a question for the jury, it appearing that he denied that he testified to the contrary, the stenographer's notes of the evidence on the former trial being inconclusive, and the record on appeal in the first case showing that he offered after the close of the evidence to return to the stand and testify to facts stated on the last trial, but was not permitted to do so.—International & G. N. R. Co. v. Ives (Civ. App.) 78 S. W. 36.

[n] (Tex. 1908) It is peculiarly the province of the jury to determine the credibility of witnesses and the weight to be given to the testimony, and for the court to decide that the testimony is entitled to no credit because overborne by contradictory testimony or so contrary to circumstances in proof as to render it improbable, is to improperly assume the functions of the jury, and is reversible error. Judgment (Civ. App.) 106 S. W. 1131, reversed.—Harpold v. Moss, 109 S. W. 928.

[o] (W. Va. 1897) The jury is the sole judge of the credibility of contradicting witnesses, and of the weight to be given to their testimony.—Young v. West Virginia & P. R. Co., 28 S. E. 932.

[p] (Wis. 1896) Where plaintiff's testimony, if believed, was sufficient to support a verdict in his favor, it was error to direct a verdict for defendant, though plaintiff's evidence was uncorroborated in any, and contradicted in many, material points, and he was shown to have made statements, purposely false, out of court, contradicting his testimony.—O'Brien v. Chicago & N. W. Ry. Co., 92 Wis. 340, 66 N. W. 363.

V. Corroborated or Uncorroborated Testimony.

[a] (Ill. App. 1903) The jury are the judges of the credibility of the witnesses and the weight of the testimony, and may consider to what extent witnesses are corroborated or contradicted by other testimony, or by facts or circumstances proved, and may also judge of the probability of testimony.—Village of Evergreen Park v. Bailey, 107 Ill. App. 420.

[b] (N. Y. 1891) In an action by a broker to recover the balance due on a purchase of corn alleged to have been made for defendant, the dispute was as to whether any purchase had been in fact made. Defendant urged that there was no real purchase, but admitted that in August he ordered a certain amount of October corn, and also that he knew it was the custom of brokers to buy in their own names without disclosing their principals. The broker testified that he bought the corn under this custom, and that it was delivered and handled by elevator receipts, but never actually moved. He advised defendant of the purchase on the same day it was made, and produced several letters from him in response to his own. He also produced contract slips from the sellers, which he stated referred to defendant's purchase, though there was nothing on their face to indicate it. After part of the price had been paid corn declined; and the broker testified that he sold defendant's purchase at a loss, and notified him that "the corn upon your purchase was delivered this morning to us, and delivered out again upon your sale." There was no evidence for defendant, and the court directed a verdict against him. *Held* that, inasmuch as the broker was a party, and there was no evidence to corroborate him, defendant was entitled to go to the jury.—Rumsey v. Boutwell, 61 Hun, 165, 15 N. Y. Supp. 765.

[c] (N. Y. 1894) Testimony of plaintiff in an action on a Bohemian seed grain note that he was a bona fide purchaser for value does not justify the direction of a verdict for plaintiff, where it is corroborated only by evidence that he was heard making inquiries whether certain notes, not identified as including the note in suit, were good, and that a person of whom plaintiff inquired concerning the maker replied that he was honorable and upright and good for the amount of the note.—Miller v. Boyer, 79 Hun, 131, 29 N. Y. Supp. 479.

Digitized by Google

[d] (N. Y. 1894) It is error to direct a verdict for plaintiff on the uncorroborated testimony of a witness hostile to defendant.—Dudley v. Satterlee (City Ct.) 8 Misc. Rep. 538, 28 N. Y. Supp. 741.

[e] (N. Y. 1896) The testimony of defendant, to whom plaintiff had sold leather, for the price of which plaintiff was suing, that the contract was an entire one, for the sale of a certain lot of leather, of which that delivered was a part, was corroborated by the testimony of an employé of plaintiff and an employé of defendant that plaintiff had in the warehouse the quantity of leather claimed by defendant to have been purchased by him; that plaintiff stated that he had sold that lot to defendant, but said nothing about reserving any part of it and therefore the rule that where the testimony of the party is uncorroborated his credibility is a question for the jury, though he is not contradicted, does not apply.—Hull v. Littauer, 8 App. Div. 227, 40 N. Y. Supp. 338.

[f] (N. Y. 1896) The rule which makes the credibility of a party as a witness in his own behalf a question for the jury where he is uncorroborated, though he is also uncontradicted does not apply where there is no conflict in the evidence, and there are no circumstances from which an inference might be drawn against the facts testified to.—Lincoln Nat. Bank v. Kirk (Sup.) 18 Misc. Rep. 45, 41 N. Y. Supp. 18.

[g] (N. Y. 1904) Whether a witness was corroborated was a question for the jury.—Haggerty v. New York City Ry. Co. (Sup.) 90 N. Y. Supp. 336.

[h] (N. Y. 1904) It is the province of the jury to give plaintiff's uncorroborated evidence credit, and the verdict in his favor will not be disturbed as against the weight of the evidence.—Doherty v. Metropolitan St. Ry. Co. (Sup.) 91 N. Y. Supp. 19.

[i] (N. Y. 1906) A case depending on the uncorroborated testimony of plaintiff is for the jury, though such testimony is uncontradicted.—Mendoza v. Levy, 111 App. Div. 449, 97 N. Y. Supp. 753.

VI. Conflicting Testimony.

[a] When evidence is conflicting, it is a question for the jury to determine from all the circumstances to whom they will give credit.

—(U. S. 1893) Northern Pac. R. Co. v. Conger, 5 C. C. A. 410, 56 Fed. 20, 12 U. S. App. 240; (1882) McKay v. Irvine (C. C.) 10 Fed. 725, 11 Biss. 168;

(Ill. 1864) Chicago & R. I. R. Co. v. Northern Illinois Coal & Iron Co. 36 Ill. 60; (1903) Junction Min. Co. v. Ench, 111 Ill. App. 346; (1904) Chicago City Ry. Co. v. Matthieson, 113 Ill. App. 246, judgment affirmed 212 Ill. 292, 72 N. E. 443;

(Minn. 1903) White v. Collins, 95 N. W. 765;

(Miss. 1898) Rucks v. Great Southern Telephone & Telegraph Co., 23 South. 454;

(Mo. 1897) Downing v. Missouri, K. & T. Ry. Co., 70 Mo. App. 657; (1904) Bissell v. York, 108 Mo. App. 272, 83 S. W. 282;

(N. Y. 1861) Smith v. Tiffany, 36 Barb. 23; (1871) Lawrence v. Maxwell, 58 Barb. 511; (1873) Fellows v. Barton, 66 Barb. 608; (1899) Clement v. Congress Spring Co., 158 N. Y. 692, 53 N. E. 1124, affirming judgment (1895) 91 Hun, 636, 35 N. Y. Supp. 1004; (1905) Hunt v. Dexter Sulphite Pulp & Paper Co., 183 N. Y. 544, 76 N. E. 1097, affirming judgment 100 App. Div. 119, 91 N. Y. Supp. 279;

(Okl. 1906) Folley v. Chicago, R. I. & P. Ry. Co., 16 Okl. 32, 84 Pac. 1090;

(Tenn. 1906) Kinney v. Yazoo & M. V. R. Co., 116 Tenn. 450, 92 S. W. 1116;

(Tex. 1856) Alley v. Booth, 16 Tex. 94.

[b] (Conn. 1898) Where, if plaintiff's evidence as to a date were true, his right of action would be defeated, but one of his witnesses, who had equal knowledge of the facts, testified that the date was different, it was error to grant a nonsuit, since the jury had a right to believe the latter witness rather than plaintiff.—Cohen v. Elm City Mfg. Co., 40 Atl. 455.

[c] (Ill. 1898) When the evidence is conflicting, the question as to what is credible is for the jury, and the function of the judge is strictly limited to

Digitized by Google

determining whether there is or is not evidence legally tending to prove the facts affirmed.—Kean v. West Chicago St. R. Co., 75 Ill. App. 38.

[d] (Ky. 1875) A peremptory instruction is not authorized where the testimony on both sides is of the same kind and tendency, and where the jury must weigh and where they can give credit or refuse to give credit to either a part or the whole of the testimony on each side.—United Society of Shakers v. Underwood, 74 Ky. (11 Bush) 265, 21 Am. Rep. 214.

[e] (Mich. 1904) Whether a witness' explanation of his testimony on direct examination, which is in direct conflict with his testimony on re-examination, is reasonable, is a question for the jury.—Piehl v. Piehl, 101 N. W. 628, 11 Detroit Leg. N. 666.

[f] (Mo. 1899) Where the testimony is conflicting, and there is no physical fact to clearly determine the conflict, the case should go to the jury, who are the sole judges of the credibility of witnesses and the preponderance of evidence.—Brown v. Mays, 80 Mo. App. 81, 2 Mo. App. Rep'r, 526.

[g] (N. Y. 1891) In an action against a wife to recover on a written contract made by her husband for the erection of a building on her land, there was evidence that the plans were prepared at the suggestion of defendant, and accepted by her, and that she personally directed the work; all of which was denied by her. She testified without contradiction that her husband contracted without her authority and against her will. *Held*, that it was error to dismiss the complaint, as the jury might disregard defendant's testimony, which was inconsistent with other evidence in the case.—Slater v. McGuire, 62 Hun, 620, 16 N. Y. Supp. 682, judgment affirmed (1893) 137 N. Y. 614, 33 N. E. 744.

[h] (N. Y. 1893) The court should not take a case from the jury by directing a verdict when there is a substantial dispute on a question of fact which affects the merits of the controversy, arising out of a doubt as to the credibility of witnesses.—Eisenlord v. Clum, 67 Hun, 518, 22 N. Y. Supp. 574.

[i] (N. Y. 1902) Though there is evidence of written or oral statements made by witnesses out of court conflicting with their testimony, yet the question of their credibility is for the jury.—McCoy v. Munro, 76 App. Div. 435, 78 N. Y. Supp. 849.

[j] (S. C. 1887) Where there is some testimony tending to establish the facts necessary to the maintenance of the action, a nonsuit cannot be granted, even if the court is satisfied that plaintiff, upon whose testimony the case turns, is unworthy of credit, as the question of credibility is for the jury.—Hornsby v. South Carolina Ry. Co., 26 S. C. 187, 1 S. E. 594.

VII. Interested Witnesses.

[a] Though the testimony of a party is uncontradicted, his interest in the result of the action presents a question as to his credibility which the jury should pass on.

—(Mo. App. 1905) Dysart-Cook Mule Co. v. Reed & Heckenlively, 114 Mo. App. 296, 89 S. W. 591;

(N. Y. 1886) Kelly v. Burroughs, 102 N. Y. 93, 6 N. E. 109; (1894) Goldsmith v. Coverly, 75 Hun, 48, 27 N. Y. Supp. 116, 31 Abb. N. C. 149; Van Mater v. Burns, 76 Hun, 3, 27 N. Y. Supp. 624; Fisher v. Rankin, 78 Hun, 407, 29 N. Y. Supp. 143; (1906) Fuller Buggy Co. v. Waldron, 112 App. Div. 814, 99 N. Y. Supp. 561.

[b] (U. S. 1901) Though, in an action against a railroad for death of a brakeman, the only direct evidence that notice of the danger was given deceased is the testimony of the conductor, whose duty it was to bring the bulletin in regard to it to the knowledge of the trainmen, his credibility is not for the jury, on the ground of his interest to show that he had done his duty; his testimony not being contradicted or brought in question by cross-examination or the admitted facts, and there being nothing else in the case tending to raise a doubt as to the truth of his testimony.—Hauss v. Lake Erie & W. R. Co., 46 C. C. A. 94, 105 Fed. 733.

[c] (Ark. 1908) Where a witness was interested in the result, and there were some possible discrepancies in the two depositions given by him, the

Digitized by Google

court could not say that it would be arbitrary for the jury to disregard his testimony.—Main v. Tracy, 109 S. W. 1015.

[d] (Cal. 1901) In an action for death caused by a collision with a street car, the motorman on his examination in chief testified that he could not tell whether the car came in contact with the deceased, and on cross-examination, for the purpose of impeachment, he was asked if he had not said to a witness that he struck the deceased lightly. *Held*, that the question whether the statements claimed to have been made by the motorman were made by him or by some other man was for the jury.—Schneider v. Market St. Ry. Co., 134 Cal. 482, 66 Pac. 734.

[e] (Ill. 1875) When the parties, testifying each in his own behalf, contradict each other, the jury are to determine which one should be believed.—Stampofski v. Steffens, 79 Ill. 303.

[f] (Iowa 1907) On the issue whether a bank received a note in good faith, the credibility of the testimony of its cashier that the bank purchased the note for value before maturity is for the jury.—McKnight v. Parsons, 113 N. W. 858.

[g] (Ky. 1891) As to whether the testimony of a plaintiff shall prevail over the combined testimony of three defendants is for the jury to determine.—Williams v. McKee (Super.) 13 Ky. Law Rep. (abstract) 143.

[h] (Md. 1860) A creditor of an estate to the amount of $900 assigned his claim to a person owning no property for two notes of $300 each, one of which the assignee paid. He made the assignment for the purpose of making himself a competent witness for the estate in a suit about to be brought by the administrator, the loss of which would leave the estate unable to pay more than $200 on his claim. On his voir dire in such suit he testified that if the suit was lost he did not intend to collect the second note, and that the assignee knew of such intention, but there was no agreement to prevent him from collecting it, and that he might change his mind. *Held*, that how far such transaction should affect the credit of the witness was a question for the jury.—Reynolds v. Manning, 15 Md. 510.

[i] (Mass. 1900) Where witness, while employed by defendant to remove the carbons from street lamps, threw a piece of carbon so that it struck plaintiff and injured him, it was not error to refuse to direct a verdict for defendant because witness testified that he threw it in order to attract plaintiff's attention, and not for any purpose connected with his business, since the jury might believe that witness was testifying in his employer's interest, and not credit his testimony.—Hankinson v. Lynn Gas & Electric Co., 175 Mass. 271, 56 N. E. 604.

[j] (Mass. 1905) Where there was evidence that a motorman injured by a collision received orders to proceed along the single track on which the collision occurred, and that such orders could have been given only by the starter, the weight to be given to the starter's positive denial that he gave such orders was for the jury.—Nagle v. Boston & N. St. Ry. Co., 188 Mass. 38, 73 N. E. 1019; Hart v. Same, Id.

[k] (Mich. 1903) Where, in trover for certain sugar sold defendant by a shipping clerk in the employ of plaintiffs as his own property, the clerk has testified on the trial that he stole the sugar in question from plaintiffs and delivered it to defendant, who paid him for it, the credibility of the clerk was for the jury.—Ball-Barnhart-Putman Co. v. Lane, 97 N. W. 727, 10 Detroit Leg. N. 724.

[l] (N. Y. 1874) The judge should never direct a verdict for plaintiff on plaintiff's testimony alone.—Hodge v. Buffalo, Sheld. 418, 1 Abb. N. C. 356.

[m] (N. Y. 1878) The credibility of an interested witness, although he is not impeached nor his testimony contradicted, is a question for the jury; and the court cannot properly direct a verdict upon his testimony alone.—Gildersleeve v. Landon, 73 N. Y. 609.

[n] (N. Y. 1883) Where the receiver of a firm defends an action against his assignees for the price of goods, a member of the firm testifying for the receiver is interested in the suit, and therefore his credibility should be submitted to the jury.—Honegger v. Wettstein, 94 N. Y. 252.

[o] (N. Y. 1887) Where the evidence advanced in supporting the validity of an assignment was given by witnesses interested in sustaining it, their evi-

Digitized by Google

dence was not conclusive, and it was error to direct a verdict on the strength thereof.—Pool v. Harris, 11 N. Y. St. Rep. 673.

[p] (N. Y. 1891) The only witness to prove the case of a defendant was her husband and agent, who was interested in the success of the defense. *Held* that, although his testimony was not contradicted, the court properly refused to direct a verdict for defendant thereon.—Roseberry v. Nixon, 58 Hun, 121, 11 N. Y. Supp. 523.

[q] (N. Y. 1891) Where the claims of a party to an action depend upon the testimony of an interested witness the court has no authority to direct a verdict in favor of that party.—Leavitt v. Dodge, 61 Hun, 627, 16 N. Y. Supp. 309.

[qq] (N. Y. 1892) In an action for rent it is error to direct a verdict for the lessee, upon his testimony as to a breach of an oral condition, as his testimony, though unimpeached, being that of a party in interest, his credibility is a question for the jury.—Corn v. Rosenthal (Com. Pl.) 1 Misc. Rep. 168, 20 N. Y. Supp. 632.

[r] (N. Y. 1892) In an action by lawyers for services where the issue is as to the contract under which the services were rendered, plaintiffs' clerk is not so interested in the result as will render necessary the submission to the jury of his evidence as to the contract, where he is unimpeached and uncontradicted by other witnesses or by circumstances, and his evidence is natural and probable, and the direction of a verdict, on his evidence, in plaintiffs' favor, is proper.—Howe v. Schweinberg (City Ct. N. Y.) 1 Misc. Rep. 481, 21 N. Y. Supp. 469, judgment affirmed (Com. Pl. 1893) 4 Misc. Rep. 73, 23 N. Y. Supp. 607.

[rr] (N. Y. 1895) In replevin for goods seized under an execution against plaintiff's father, it was error to direct a verdict for plaintiff on his testimony and that of his father, where there was evidence that the father had an interest in the goods, as the jury were at liberty to disbelieve their testimony, because of their interest.—Wilcox v. Selleck, 92 Hun, 37, 36 N. Y. Supp. 633.

[s] (N. Y. 1896) The cashier of a bank who, as notary public, protests a note owned by the bank, is not a disinterested witness as to such transaction; and the credibility of his testimony, though not directly contradicted, is a question for the jury.—Kingsland Land Co. v. Newman, 1 App. Div. 1, 36 N. Y. Supp. 960.

[ss] (N. Y. 1896) Where the only evidence in support of plaintiff's claim is his own testimony and that of his brother, who is a stockholder in a company whose assets, in case of an adverse judgment, would be liable for the payment of the debts with which it is sought to charge defendant, the witnesses' credibility, though unassailed, is for the jury.—Lowey v. Fidelity Printing Co. (Sup.) 16 Misc. Rep. 549, 38 N. Y. Supp. 711.

[t] (N. Y. 1898) In an action for injuries received by falling into a coal hole, the owner of the premises and the coal dealer whose driver it was claimed had failed to cover the hole were made defendants, and the testimony of the owner and the driver negativing negligence was not contradicted. *Held*, that they were interested witnesses, and the weight of their testimony was for the jury. —Finn v. Peterson, 24 Misc. Rep. 737, 53 N. Y. Supp. 787.

[tt] (N. Y. 1899) The credibility of an employé of defendant who testified as to a matter which involved the question of performance by him of his duties was properly left to the jury. Judgment (1896) 4 App. Div. 221, 38 N. Y. Supp. 587, affirmed.—Connolly v. Central Vt. R. Co., 52 N. E. 1124.

[u] (N. Y. 1899) Where the only evidence as to the construction of defendant's engine, from which it was claimed a fire proceeded, came from defendant's employés, a charge that the evidence showed that defendant employed appliances as good as any known to prevent fire is properly denied, this being for the jury. Judgment (1896) 10 App. Div. 535, 42 N. Y. Supp. 103, affirmed.—Brush v. Long Island R. Co., 158 N. Y. 742, 53 N. E. 1123.

[uu] (N. Y. 1899) Where the only testimony to a change in a contract was that of two interested, but unimpeached, witnesses, their credibility was for the jury.—Gair v. Cohen (Sup.) 56 N. Y. Supp. 180.

[v] (N. Y. 1899) Whether the uncontradicted statements of an interested witness in an action to recover for extra services by an employé, sufficient to establish a prima facie case, rebut the legal presumption that the services

Digitized by Google

were rendered as a part of the employé's duties, is for the jury. Judgment (City Ct.) 55 N. Y. Supp. 441, affirmed.—Carrere v. Dun, 26 Misc. Rep. 717, 57 N. Y. Supp. 82.

[vv] (N. Y. 1899) Though there be no conflict in the evidence, yet the case is for the jury where all the witnesses are interested.—Gorman v. Williams, 26 Misc. Rep. 776, 56 N. Y. Supp. 1031.

[w] (N. Y. 1901) Where plaintiffs paid a note of a third person held by defendant bank, and in an action against the bank to recover the money paid the testimony of two persons in plaintiffs' employ, and who conducted the purchase, was the only evidence as to representations of defendant's president that the loan was good and the warehouse certificates were all right, and such president was dead, it was not error to instruct that if the jury believed the testimony of such witnesses, and that the statements of the president were false, plaintiffs were entitled to recover, instead of directing a verdict in plaintiffs' favor on the theory that the testimony was uncontradicted.—Bloomingdale v. Southern Nat. Bank, 63 App. Div. 72, 71 N. Y. Supp. 306.

[ww] (N. Y. 1903) While the credibility of every witness is usually for the jury, they are not at liberty to disregard the testimony of any witness, even though he be a party, who is in no wise impeached, and whose testimony is such that its truth is highly probable.—Littlefield v. Lawrence, 83 App. Div. 327, 82 N. Y. Supp. 25.

[x] (N. Y. 1903) The credibility of the motorman of a car which runs into a wagon, and who testifies that he discovered the peril as soon as possible and did everything in his power to avert collision, is for the jury.—Fisher v. Union Ry. Co., 86 App. Div. 365, 83 N. Y. Supp. 694.

[xx] (N. Y. 1905) The credibility of witnesses, although one of them is a party interested in the recovery, and the other wholly disinterested is for the jury. Judgment (1904) 94 App. Div. 610, 87 N. Y. Supp. 904, affirmed.—Sternaman v. Metropolitan Life Ins. Co., 181 N. Y. 514, 73 N. E. 1133.

[y] (N C. 1858) Because the judge, on an examination before him, decided that a person offered as a witness was a joint owner of the property sued for, and therefore incompetent as a witness, it is no ground for him to nonsuit plaintiff, but the cause should proceed before the jury on the question who owned the property, as if no examination or decision had been made by the court.—Scott v Brown, 50 N. C. 406.

[yy] (Pa. 1871) Though the fact that a witness devested himself of certain property in order to qualify himself to testify does not impeach his competency, yet where he merely says he has transferred such property, without stating whether it was for consideration or as a gift or with the expectation of getting it back, it was error for the court to reject his testimony, as the validity of the transfer was for the jury.—East Mt. Coal Co. v. Schuyler, 3 Leg. Gaz. 106.

[z] (Pa. 1879) The act of 1869 having made parties to an action competent witnesses for all purposes, the evidence of a defendant in his own behalf, although unsupported, and positively contradicted by plaintiff, must be submitted to the jury.—Shaffer v. Clark, 90 Pa. 94.

[zz] (Tex. 1901) Plaintiff contracted with defendants for the sale of cotton ties at a specified price, to be delivered where the purchasers should designate. He testified that he resold the ties at the highest price then obtainable, which was below the contract price, and drew on defendants for the difference beween the contract price and the amount realized from the sale, and that the sale was mutually advantageous to the parties; the goods continuing to depreciate in value after the sale. Plaintiff's evidence was uncontradicted. *Held*, that it was error to instruct a verdict for plaintiff, since, plaintiff being an interested witness, the question of his credibility was for the jury.—Heierman v. Robinson (Civ. App.) 63 S. W. 657.

VIII. DEMEANOR, KNOWLEDGE, FALSITY, OR OTHER MATTERS AFFECTING CREDIBILITY.

[a] There is no positive rule that the jury must believe a witness who has not been impeached, or must reject his testimony if evidence has been offered

Digitized by Google

to impeach him. The question of credibility, under all the testimony and indications from the manner of the witnesses, is for the jury, though they are not to reject a witness arbitrarily.

—(Ill. 1875) Hartford Life & Annuity Ins. Co. v. Gray, 80 Ill. 28; Evans v. George, Id. 51;
(Ind. 1873) Oliver v. Pate, 43 Ind. 132;
(N. Y. 1876) Culhane v. New York Cent. & H. R. R. Co., 67 Barb. 562;
(N. C. 1876) State v. Smallwood, 75 N. C. 104.

[b] (U. S. 1882) In an action for damages for violent ejection from a car by the conductor, it is the province of the jury to reconcile difference in the testimony, and to decide as to the credibility of the witnesses, taking into consideration the relation they sustain to the case, their probable motives, their demeanor, and their opportunities of knowing and seeing the facts about which they testify, and the reasonableness or unreasonableness of their testimony, in view of the knowledge of human nature, and the established and undoubted facts in the case.—Gallena v. Hot Springs R. R. (C. C.) 13 Fed. 116.

[c] (Ala. 1901) The mere fact that a party testifies to a fact found not to exist in a former suit, by which he is concluded, does not authorize the rejection of his evidence as to other material facts, in the absence of other evidence in reference thereto, by giving a general affirmative charge against him, but his evidence is sufficient to raise a jury question.—Callan v. Anderson, 31 South. 427.

[d] (Conn. 1847) Whether a witness has impaired the credibility of his testimony by his demeanor upon the stand is a question for the jury to determine. —Pierce v. Selleck, 18 Conn. 321.

[e] (Ga. 1887) Though a witness might be legally culpable by reason of false swearing under the influence of a groundless or needless fear, yet if fear for his life existed, and was the real cause of his dereliction, and he afterwards swears truly, the jury may credit his testimony irrespective of his responsibility for yielding to his fears on the former occasion, and court should leave the jury to deal with the question of his veracity, as one of fact. —McCoy v. State, 78 Ga. 490, 3 S. E. 768.

[f] (Ill. 1871) Whether a witness is mistaken or knowingly testifies falsely is a question of fact for the jury.—Carey v. Henderson, 61 Ill. 378.

[g] (Ill. 1905) It is the peculiar province of the jury, who see the witnesses and hear their testimony, to determine which are the more worthy of credit. —Krahn v. Bickford, 118 Ill. App. 511.

[h] (Ind. 1845) Whether the testimony of a witness is rendered suspicious by any of the facts proved is a question, not for the court, but for the jury.—Van Vacter v. McKillip, 7 Blackf. 578.

[i] (Iowa, 1906) Where some of the evidence of moral character of a witness relates to one period and some to another, its weight depends on the credibility of the witnesses and other circumstances, and is for the jury, and the court erred in instructing that the nearer the time the greater weight it possessed.—Hardwick v. Hardwick, 106 N. W. 639.

[j] (Kan. 1877) There is no rule of law that testimony of a party, or of a relative of a party, is to be viewed with suspicion; its credibility is for the jury.—Kansas Pac. Ry. Co. v. Little, 19 Kan. 267.

[k] (Ky. 1892) The question as to whether witnesses are ignorant, confused, and unable to make an intelligent statement of the facts is for the jury.—Louisville & N. R. Co. v. Hurst's Adm'r, 20 S. W. 817.

[l] (Mass. 1903) It cannot be said, as a matter of law, that, if a party to an action has testified falsely to a material question, the presumption is that all her testimony is false.—Root v. Boston Elevated Ry. Co., 183 Mass. 418, 67 N. E. 365.

[m] (Mich. 1899) If the fact that a witness was recalled to supplement his testimony, which before was defective as to a material matter, is a suspicious circumstance, it is for the jury to consider.—Holmes v. Deppert, 80 N. W. 1094.

[n] (Minn. 1877) The credibility of a witness, knowingly testifying falsely as to one or more material facts, is, as to other facts, entirely for the jury,

Digitized by Google

and they may believe or disbelieve him, as they see proper.—Schuek v. Hagar, 24 Minn. 339.

[o] (Mo. 1870) Questions whether witnesses swear falsely, or what credit is to be attached to evidence, or how far it is contradictory, are solely for the jury in trials at law, and will not be considered in the supreme court.—Bonnell v. United States Express Co., 45 Mo. 422.

[p] (Neb. 1903) The questions whether a witness has willfully and intentionally testified falsely, and, if so, what effect that fact should have on the credibility of his other testimony, are exclusively for the determination of the jury.—Bankers' Union of the World v. Schiverin, 92 N. W. 158.

[q] (N. Y. 1892) In an action by a real estate broker to recover commissions, the nature of the transaction being such as to cast suspicion on plaintiff, and he being the only witness on his behalf, the court erred in directing a verdict for him, but should have submitted the case to the jury.—Condit v. Sill (Com. Pl.) 18 N. Y. Supp. 97.

[r] (N. Y. 1902) While the court has power to set aside a verdict as contrary to the evidence, it cannot grant a nonsuit based on a disregard of any of the evidence as untruthful.—Bell v. Mills, 78 App. Div. 42, 80 N. Y. Supp. 34.

[s] (N. C. 1901) The credibility of a witness is a matter peculiarly within the province of the jury, and depends not only on his desire to tell the truth, but also on his insensible bias, his intelligence, his means of knowledge, and powers of observation.—Cogdell v. Southern Ry. Co., 129 N. C. 398, 40 S. E. 202.

[t] (Ohio, 1899) The fact that assured, knowing that the statements of a fellow townsman were unfavorable, and tending to support the claim that assured was guilty of burning his own property, appealed to such person, who afterwards became a witness in an action by assured against the insurance companies, to make a statement denying such statements, even going so far as to offer small sums of money to have him do so, is not necessarily reprehensible or tending to prove guilt; but the credibility of the assured and the witness, under such circumstances, is a fair question for the jury.—Connecticut Fire Ins. Co. v Carnahan, 10 O. C. D. 186.

[u] (Pa. 1890) Where the testimony of a boy eight years of age is taken in his own behalf, after he has been examined as to his competency, and found to be qualified, and he testifies in a circumstantial manner as to a fact peculiarly within his knowledge, and which, if believed, would prevent his recovery, it is error for the trial judge to disregard his testimony on the mere assumption that he may have been mistaken, especially when he is not recalled to explain or retract the statement.—Sandford v. Hestonville, M. & F. P. R. Co., 136 Pa. 84, 20 Atl. 799, 26 Wkly. Notes Cas. 401.

[v] (Pa. 1903) Where the evidence in an action against a railroad company for personal injuries showed that an agent of the railway had paid certain moneys to boys, who were the only witnesses of the accident, and that counsel for plaintiff was prevented from speaking to the boys in court by defendant's agent, and the agent testified that the money was given to the boys for car fares and luncheons, the court properly left it to the jury to determine whether the payments were legitimate, or made for the purpose of affecting the evidence of the boys.—Enright v. Pittsburg Junction R. Co., 204 Pa. 543, 54 Atl. 317.

[w] (S. C. 1818) Influence which goes to the credibility of a witness is for the jury.—City Council v. Haywood, 2 Nott & McC. 308.

[x] (S. C. 1847) It is for the jury to determine what weight is to be given to the testimony of one whose immoral and degraded life shows a want of religious sentiment, or a disregard to personal character or reputation in society.—Bowman v. Smith, 1 Strob. 246.

[y] (Va. 1874) If the testimony of a lunatic is received, its credibility is for the jury.—Coleman v. Commonwealth, 25 Grat. 865, 23 Am. Rep. 711.

[z] (Wis. 1905) Whether the rule of "Falsus in uno, falsus in omnibus," applies to the consideration of the evidence in a case is primarily a question for the court, and not for the jury.—Pumorlo v. City of Merrill, 103 N. W. 464.

Digitized by Google

IX. Improbability of Testimony.

[a] (U. S. 1905) While the credibility of witnesses on disputable facts should be submitted to the jury for their determination, yet where the evidence in respect of a given situation or fact is overwhelmingly persuasive, it is not to be maintained that any evidence to the contrary, however inconsequential and improbable, should carry the case to the jury.—Waters-Pierce Oil Co. v. Van Elderen, 70 C. C. A. 255, 137 Fed. 557; Chambers v. Same, Id.

[b] (Cal. 1897) The credibility of witnesses whose testimony tends to establish a controverted fact is for the jury, where there is nothing so manifestly improbable in the character of such testimony as to justify the court in ignoring it.—Fox v. Oakland Consol. St. Ry., 118 Cal. 55, 50 P. 25.

[c] (Cal. 1901) Where, in an action for breach of a contract of marriage, plaintiff and another witness testify positively to the contract, and they are corroborated by other unimpeached witnesses, the court should not reject their testimony, unless so improbable as not to be entitled to belief, but should leave its weight to the jury.—Liebrandt v. Sorg, 133 Cal. 571, 65 Pac. 1098.

[d] (Ill. 1907) Where there was evidence which was not incredible, but merely inconsistent with reasonable probabilities, and the circumstances were such that it might be believed by a jury, it required the submission of the question to the jury.—Chicago City Ry. Co. v. Hagenback, 228 Ill. 290, 81 N. E. 1014.

[e] (Me. 1903) The right to a submission of an issue of fact depending on the credibility of a witness does not exist, where the undisputed circumstances show that the story told by a witness on a material issue cannot by any possibility be true, or when the testimony of a witness necessarily relied on is inherently impossible.—Blumenthal v. Boston & M. R. R., 97 Me. 255, 54 Atl. 747.

[f] (N. Y. 1904) Where the testimony of a person injured by a street car, that he looked, and did not see its approach, before he started to cross the street in front of it, is impeached by uncontroverted physical facts, showing that the car was in plain sight, and he therefore either did not look at all, or did not look with care, his credibility is not involved, so as to take the case to the jury.—McKinley v. Metropolitan St. Ry. Co., 91 App. Div. 153, 86 N. Y. Supp. 461.

[g] (N. Y. 1905) Where there is some evidence tending to establish plaintiff's cause of action, though such evidence is incredible, the cause must be submitted to the jury.—Fish v. Utica Steam & Mohawk Valley Cotton Mills, 109 App. Div. 326, 95 N. Y. Supp. 673.

[h] (Pa. 1898) Where, if plaintiff was injured by being run into by a train at a grade crossing in the manner testified to by him, he was not guilty of contributory negligence, and the accident might have happened in that manner, it was error for the court to take the case from the jury, though plaintiff's theory was improbable.—Bruenninger v. Pennsylvania R. Co., 43 Wkly. Notes Cas. 523, 9 Pa. Super. Ct. 461.

[i] (Wis. 1898) The credibility of the plaintiff as a witness in his own behalf is for the jury. It is for them to say, under proper instructions, whether or not the facts testified to by him are within reasonable probabilities, or unreasonable, and not to be believed.—Welty v. Lake Superior Terminal & Transfer Co., 75 N. W. 1022.

X. Impeaching or Impeached Witnesses, or Witnesses Sought to be Impeached.

[a] (Ga. 1859) It is for the jury to determine the credibility of a witness whose testimony has been impeached, but in support of whose testimony rebutting evidence has been introduced.—Western & A. R. Co. v. Carlton, 28 Ga. 180.

[b] (Ga. 1873) It is for the jury to determine what credit shall be given to the evidence of an impeached witness.—Shorter v. Marshall, 49 Ga. 31.

Digitized by Google

[c] (Ga. 1892) Whether or not a witness has been impeached is to be determined by the jury after consideration of all the evidence, including such as has been adduced as to his good character, and his conflicting statements, if any.—Hodgkins v. State, 89 Ga. 761, 15 S. E. 695.

[d] (Mass. 1849) The question of a witness' reputation for truth and veracity is one of fact to be tried by the jury; and it is not competent for the court to institute or allow a preliminary examination of the impeaching witnesses, as to their knowledge and means of knowledge of the reputation of the witness sought to be impeached, and thereupon to receive or reject their testimony according as the court are satisfied or not that they have the requisite knowledge to enable them to testify to the fact in question.—Bates v. Barber, 58 Mass. (4 Cush.) 107.

[e] (Mo. 1886) The question whether a witness has been successfully impeached is a question of fact for the jury.—Osborne v. Oliver, 23 Mo. App. 667.

[f] (N. Y. 1874) Where a party to an action has been sworn as a witness in his own behalf, and witnesses are called by the other party to impeach his evidence, such impeaching testimony should be submitted to the consideration of the jury.—Allis v. Leonard, 58 N. Y. 288.

[g] (Ohio, 1900) It is not the duty of the trial judge to determine, as a matter of fact, whether a written statement, by its silence as to material facts, made by a witness out of court, tends to impeach, or does impeach, his testimony on the witness stand. That question may properly be determined by the jury.—Spaulding v. Toledo Consol. St. Ry. Co., 20 Ohio Cir. Ct. R. 99, 10 O. C. D. 660.

XI. Expert Witnesses.

[a] (Mo. 1889) It is for the court to determine in the first instance whether a witness, who is offered as an expert, possesses the proper qualifications; but the value of the evidence which the witness may give is a question for the jury.—Thompson v. Ish, 99 Mo. 160, 12 S. W. 510, 17 Am. St. Rep. 552.

[b] (Mo. 1904) In an action against a street railroad for injuries to a passenger, the weight to be given testimony of street car employés as experts is for the jury.—McNamara v. St. Louis Transit Co., 80 S. W. 303.

[c] (N. Y. 1903) Where expert testimony was introduced by plaintiff, such as, if believed by the jury, would have entitled him to substantial damages, it was error for the court to direct a verdict for nominal damages.—Bjerrum v. Springfield Breweries Co., 83 App. Div. 172, 82 N. Y. Supp. 472.

Digitized by Google

(160 Fed. 943.)

UNITED STATES FASTENER CO. v. CÆSAR et al.

(Circuit Court of Appeals, Second Circuit. March 13, 1908.)

No. 174.

PATENTS—INFRINGEMENT—SEPARABLE BUTTON.

The Pringle patent, No. 720,616, for the stud member of a separable button or fastener, construed, and *held* not infringed.

Appeal from the Circuit Court of the United States for the Southern District of New York.

For opinion below, see 154 Fed. 671.

Appeal from a decree of the Circuit Court in favor of the complainant in a suit charging the infringement of a patent.

Stephen J. Cox (William R. Baird, of counsel), for appellants.

John P. Bartlett and Thomas W. Bakewell, for appellee.

Before LACOMBE, COXE, and NOYES, Circuit Judges.

NOYES, Circuit Judge. The patent in suit, for an improvement in studs, is No. 720,616, and was granted February 17, 1903, to the complainant as assignee of Eugene Pringle.

The patentee thus states the nature and object of his invention:

"My invention relates to studs for separable buttons or fasteners—such, for instance, as are employed on gloves and other articles of apparel; and it consists of structural improvements in the stud member of such fasteners.

"The object of my invention is to provide means whereby a stud member of a stud-and-socket fastener adapted to engagement with a complemental socket may be secured in place upon the fabric, leather, or what not by means of an eyelet, of which the barrel passes through the fabric, enters the stud, and is upset or clinched within the stud itself to form a fastening-flange on the barrel by means of a turning-piece or deflector contained within the body of the stud, which deflector by contact with the eyelet-barrel determines the direction and degree of its deflection as the eyelet and stud on opposite sides of the fabric are forced together by means of a suitable tool or press."

The claims of the patent—all of which it is contended that the defendants infringe—follow:

"1. In a member of a stud-and-socket fastener, a stud, comprising a head, an engaging groove below the head, and a flange below the groove, an eyelet-turning piece within the stud, and an eyelet to attach the stud to material, having its tubular portion passed through the material and upset against the eyelet-turning piece.

"2. In a member of a stud-and-socket fastener, the combination of a hollow grooved stud seated on one side of material, a fastening-eyelet therefor, seated on the opposite side of the material and having its stem projected through the material into the stud, and a binding piece, secured to the stud and having a central tubular portion entering the stud and surrounding the stem of the eyelet.

"3. In a member of a stud-and-socket fastener, the combination of a hollow stud, having a head, a base, a groove between the head and base, the stud and base slitted radially, an eyelet-turning piece within the stud, a binding-piece confining the slitted base, and an eyelet, inserted in the stud from below, and upset against the eyelet-turning piece."

The following cuts taken from the defendants' brief and enlarged from drawings in the patent make the nature of the invention clear

Digitized by Google

and are so marked as to be self-explanatory; the first illustration showing the structure covered by claims 1 and 3, and the second that specified in claim 2:

CLAIMS 1 AND 3.

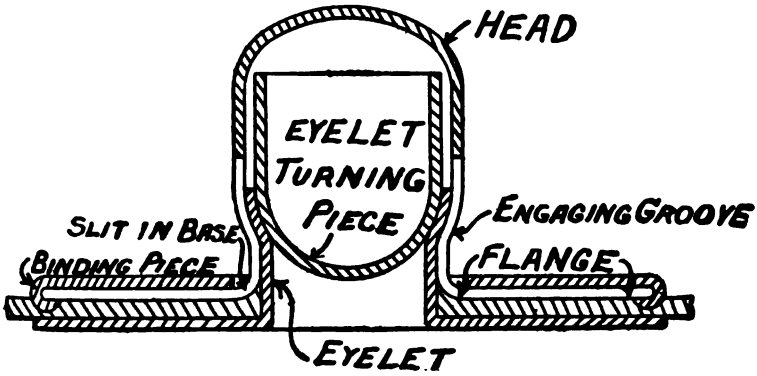

CLAIM 2.

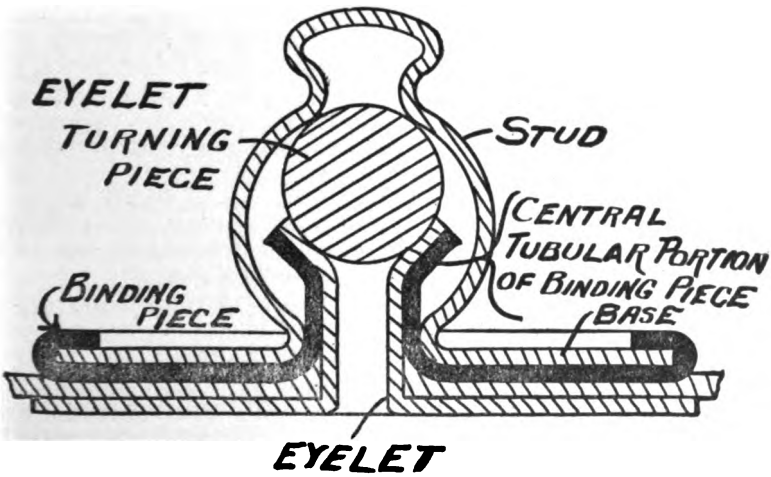

The Circuit Court held the patent valid and infringed in all its claims. Upon this appeal we shall consider the questions in their inverse order. If no infringement be found, consideration of the other questions will be unnecessary.

In examining a question of infringement, the primary inquiry is whether every element of a claim is found in the device complained of. If any element, or an equivalent therefor be lacking, there is no infringement. Taking up claims 1 and 3, we find that a material element of each is the "eyelet-turning piece within the stud." The device as

Digitized by Google

shown in the above illustrations, as well as in all the drawings of the patent, is separate and distinct from the head of the stud in which it is located; in some illustrations being in the form of a conical bullet and in others in that of a ball. Moreover, complainant's counsel urge that it is so separate from the stud, saying:

"We hardly need point out that the claims when read in the light of the drawings could only have this meaning."

In fact—as they also show—a sharp distinction was drawn in the proceedings in the Patent Office between an eyelet-turning piece and an eyelet-turning surface, thus indicating, using their language, "that an eyelet-turning piece separate and distinct from the stud itself was of importance." And it certainly is very clear that what the patentee desired to embrace within his patent was a separate and distinct turning piece; e. g., a bullet or ball shaped piece, and not a turning surface in the post or head into which the eyelet was introduced. Whether the patentee desired this on account of supposed mechanical advantages or to avoid earlier patents—e. g., the Platt patent of 1876 which covered a stud with an eyelet-turning surface—does not appear. The suggestion of the complainant, however, that this requirement of a separate turning piece had its basis in a desire to provide for a resilient stud finds little support in the patent. In all the 10 illustrations of the patent the stud shown is rigid, and adapted to be used with spring sockets only. It is true that the inventor, having stated that the base of the stud might be slitted in order to facilitate the insertion of the eyelet-turning piece, also says:

"The slits continued into the bulb shaped head of the stud, A, will lend it that resiliency which is common to several forms of studs used prior to this invention."

But this is stated rather as a possible incidental use of slits primarily designed for another purpose than as a material factor in the invention. In fact, the method of fastening the stud to the fabric was what the inventor was concerned with. He illustrated his invention with rigid, and apparently gave little consideration to spring, studs. We see nothing to indicate that the adoption of the separate turning piece had any connection with the use of a resilient stud.

We may say, moreover, in this connection that the proof is not satisfactory that continuing the slits further up into the stud—as suggested in the patent—would produce a workable spring stud. The stud of the patent must necessarily be rigid to an extent. It must tightly hold the turned eyelet. It is also made somewhat rigid by the pressure of the eyelet-turning piece. Flexibility seems inconsistent with its functions. Undoubtedly some spring could be obtained from slits, but nothing like that of the "bird cage" structure—which we will consider later—would be possible. In fact, what spring could be obtained is wholly a matter of surmise, for no one, so far as appears, ever attempted to carry out the inventor's suggestion.

We come now to the inquiry whether the element of claims 1 and 3 —the separate eyelet-turning piece—is found in the defendants' struc-

Digitized by Google

ture. The following cut taken from the defendants' brief (that in complainant's brief being similar in its essentials) illustrates the construction of the defendants' device, the lettering being ours:

DEFENDANTS.

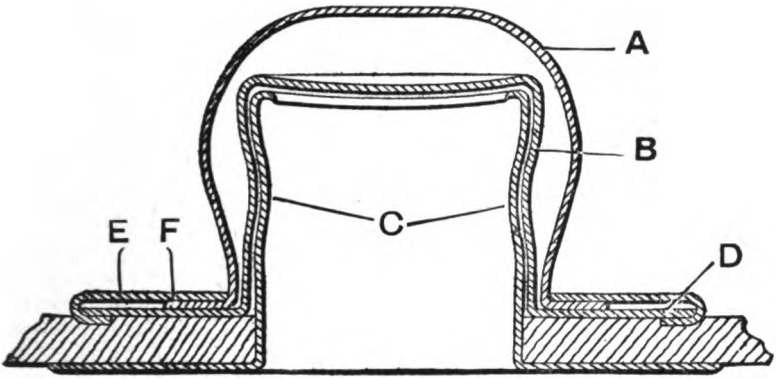

A represents the external spring which engages with the socket, and is called in the testimony a "bird cage." B is the hollow post which directly engages with the eyelet barrel, C. D is the base of the post. E is a binding piece for attaching the "bird cage," A. F represents the feet of the "bird cage." When the eyelet barrel, C, is forced into the hollow post, B, it is turned and clinched by the interior surface of the post, and the stud is thereby secured to the fabric. The complainant urges that the external spring of the defendants' device is the stud proper of the claims of the patent, and that the post, B, being within it and separate from it and having a convex head to turn the eyelet, is "the eyelet-turning piece within the stud." On the other hand, the defendants contend that the post, B, is the stud proper, that the external spring is merely an appendage to the stud, and, consequently, that there is no separate and distinct turning piece within it. How the word "stud" shall be used in comparing the structures is therefore important. But two structures cannot be compared unless the same word is used to designate the same thing in each. And, if the same term is applied to the same thing in each structure, it is of little importance whether its use is technically correct. The question is one of things rather than of words—whether the device of the patent is found in the alleged infringing structure. Broadly speaking, the whole structure of the patent is the stud—"the stud member of a stud-and-socket fastener." But, when the inventor speaks of the stud in the claims in connection with the eyelet-turning piece, he has reference to that portion of the stud member which receives the eyelet. He very properly designates this hollow post as a stud. It is the only thing shown in the patent which could be so designated. But, in case the inventor had provided in some of his drawings for an external spring or cage, there would have been no reason for a change in terms. The rigid stud would still have been the stud proper. Therefore, in determining whether the defendants' structure possesses a separate and distinct

Digitized by Google

"eyelet-turning piece within the stud," we should properly apply the word "stud" to the same thing the patent applies it to—the post which receives the eyelet barrel.

Stated in a different way: Any fair comparison of stud members should involve the comparison between two rigid studs or two resilient studs. There should be a common form. The complainant's expert testifies that the defendants' structure without the "bird cage" would be a practical rigid stud. Compared in this form it is evident that the post, B, is the stud proper corresponding to the stud proper of the patent. On the other hand, it is undoubtedly practicable to attach an external spring to the structure of the patent. Compared in this form, the post of the patent would correspond to the post of the defendants' structure, and both would properly be designated the stud proper. All the force of the complainant's argument lies in the application of the same term to different things. The defendants' structure having an external spring or cage, it is possible to designate that as the stud, and thereby call that which corresponds to the stud of the patent, and which has an interior turning surface, "an eyelet-turning piece within the stud."

But: (1) The defendants' structure minus the outside cage does not infringe. This is obvious and is admitted by the complainant's expert. (2) The external spring or cage does not infringe. The patent shows nothing like it. Therefore we cannot here find infringement produced by uniting that which does not infringe to that which not only does not infringe, but is wholly outside, the patent. The charge of infringement with respect to claims 1 and 3 is not sustained.

The remaining inquiry is whether claim 2 is infringed. A material element of this claim, according to both sides, is a "binding piece secured to the stud and having a central tubular portion entering the stud and surrounding the stem of the eyelet." Consequently claim 2 is not infringed unless this element is found in the defendants' device. The second cut taken from the patent and shown above illustrates the structure of this claim. In this structure—unlike that shown in the first cut—the eyelet barrel is turned and clinched at a point considerably above the base of the stud. This is accomplished by the central tubular portion of the binding piece. The eyelet barrel, instead of engaging directly with the stud when clinched, is engaged by this structure, which by surrounding it and affording a long support takes upon itself much of the strain. But, however meritorious this device may be, there is nothing corresponding to it in the defendants' structure. The complainant's contention that the post of the defendants' device, in connection with the separate binding piece securing the external spring, is equivalent to a binding piece having a central tubular portion entering the stud, is practically disposed of by the conclusions already reached. The post of the defendants' structure is the stud itself. It is not a tubular portion of the binding piece entering the stud. And, even if it were not properly designated as the stud, it could not be considered a part of the binding piece, which is separate and distinct from it. Claim 2 is not infringed.

The decree of the Circuit Court is reversed, with costs, and the cause remanded, with instructions to dismiss the bill, with costs.

Digitized by Google

(161 Fed. 3.)

HOLT v. CALIFORNIA DEVELOPMENT CO. et al.

(Circuit Court of Appeals, Ninth Circuit. February 10, 1908.)

No. 1,484.

1. CORPORATIONS—SUIT BY STOCKHOLDER—SUFFICIENCY OF BILL.

A bill by a stockholder against the corporation and a railroad company alleged that a contract was entered into between the two companies by which the railroad company agreed to lend to the other a large sum of money, taking as security a pledge of a majority of the latter's stock, with power to vote the same on default in repayment of any installment of the loan, and an agreement by which it was to name the president and general manager and three of the seven directors of the borrowing company, and which provided that the other directors should not be objectionable to it; that large sums were advanced by the railroad company which were in fact expended for its own benefit, but ostensibly for the benefit of the other company to which they were charged; that by reason of the latter's control by the railroad company so secured it was wholly unable to extricate itself from its indebtedness, and would be absorbed by the railroad company, as was the fraudulent intention when the contract was made; and that the other stockholders would be deprived of their property. The bill prayed for a cancellation of the contract; that an accounting be had in respect to the advances made and the equities of the parties determined. *Held*, that such bill was for the benefit of the corporation of which complainant was a stockholder, and that under its allegations he was not required to tender repayment of the sums advanced by the railroad company.

2. SAME—CONTRACTS—ULTRA VIRES—CONTRACT.

Section 12 of the New Jersey Corporation Act (P. L. 1896, p. 281), in force in 1896, provides that the business of every corporation shall be managed by its directors who shall be stockholders, and shall be chosen annually by the stockholders, and section 13 provides that every corporation shall have a president, secretary, and treasurer who shall be chosen either by the directors or stockholders as the by-laws direct. *Held*, that a contract made by a corporation organized under such act, by which it agreed to cause three of its seven directors to resign; that their successors should be named by another corporation, and one of such members should be elected president and general manager; that the other directors should be not objectionable to such other corporation; and that such officers and directors should remain in office until a loan should be repaid to the other corporation which did not all become due for six years—was in violation of such provisions of the statute and ultra vires and void, and was not validated by the fact that it contained a further provision by which the outside corporation acquired the right to vote a majority of the stock of the New Jersey corporation.

3. SAME—SURRENDER OF CONTROL TO ANOTHER CORPORATION.

The purpose of a grant of corporate power is that the corporation shall exercise its powers and carry on its business through its own officers and agents, and an agreement by which it surrenders the management and control of its affairs and business to another corporation organized for a wholly different purpose and carrying on a different business is ultra vires.

4. SAME—SUIT BY STOCKHOLDER FOR CANCELLATION OF ULTRA VIRES CONTRACT—ESTOPPEL.

A contract made by a corporation which is ultra vires in the true sense is void, and neither the corporation nor a stockholder is estopped to attack its validity by the fact that the corporation or the other party has acted under it, nor by delay in bringing suit for its cancellation.

[Ed. Note.—For cases in point, see Cent. Dig. vol. 12, Corporations, §§ 1556–1564.]

Ross, Circuit Judge, dissenting.

Digitized by Google

Appeal from the Circuit Court of the United States for the Southern Division of the Southern District of California.

Walter Malins Rose and Hunsacker & Britt, for appellant.

J. S. Chapman, E. A. Meserve, E. S. Ives, and J. W. McKinley, for appellees.

Before GILBERT, ROSS, and MORROW, Circuit Judges.

MORROW, Circuit Judge. This suit was commenced in the Circuit Court of the United States for the Southern Division of the Southern District of California. The plaintiff is a citizen of the state of California residing in the city of Los Angeles in the Southern Division of the Southern Judicial District. The defendant the California Development Company is a corporation organized and acting under the laws of New Jersey, having an authorized capital of $1,250,000 divided into 12,500 shares of the par value of $100 each. Its principal offices are in the city of Los Angeles, with property and business situate largely in San Diego county. The defendant the Southern Pacific Company is a corporation organized and acting under the laws of Kentucky, and operating a line of railroad extending through the Southern Division of the Southern Judicial District of California, with executive and administrative offices in the city of Los Angeles. The plaintiff is, and ever since the 1st day of November, 1900, has been, the owner and holder of 170 shares of the capital stock of the defendant the California Development Company. The defendant the California Development Company is the owner of all the capital stock of the corporation known as "La Sociedad de Yrrigacion y Terrenos de la Baja California (Sociedada Anonima)," which is referred to in the bill of complaint as the "Mexican Company."

In an amended bill of complaint filed February 12, 1906, the plaintiff seeks to obtain a decree against the defendants, the California Development Company and the Southern Pacific Company, declaring a certain contract entered into between the defendants on June 20, 1905, ultra vires, invalid, and not binding upon the defendant the California Development Company, and that the same be surrendered up and canceled; that a receiver be appointed to take possession of the assets and business of the California Development Company; that the defendant the Southern Pacific Company, its agents, servants, and employés be enjoined, during the pendency of the suit, from enforcing or attempting to enforce any of the terms of the instruments set forth in the complaint, or making new or different contracts relating thereto, or making other or further advances to the defendant the California Development Company under and by virtue of said contracts, and that the defendant the Southern Pacific Company be required to account for all advances theretofore made to the defendant the California Development Company. Plaintiff alleges that the principal object which the organizers and promoters of the organization of the defendant the California Development Company had in view in the formation of said corporation was to acquire the right to divert and apply to beneficial uses water flowing in the Colorado river at a point in San Diego county, Cal., near the international boundary line be-

Digitized by Google

tween the United States and the Republic of Mexico, and to convey the same for irrigation and other beneficial uses by means of an intake, heading, canals, and ditches from said river to certain arable lands lying in said San Diego county near said international boundary, and in that portion of Lower California in the Republic of Mexico adjoining said boundary upon the south; that a very large body of arable land in said vicinity, comprising upwards of 100,000 acres in said Lower California, and upwards of 800,000 acres in said San Diego county, was and is capable of irrigation from said Colorado river at reasonable outlay, by reason of the fact that said lands are lower than the bed of said river at or near said point and that said lands are in large part below the level of the sea.

From this and other allegations contained in the amended bill of complaint it appears that the lands referred to are located in the desert region between the Colorado river and the Salton Basin below the level of the sea in San Diego county, Cal., and in the adjoining territory of a similar character on the south in Lower California in the Republic of Mexico. Plaintiff alleges that in the month of May, 1900, in pursuance of the purpose set forth in the bill, the California Development Company acquired by appropriation under the laws of the state of California the right to 500,000 miner's inches of the water of the Colorado river, and thereafter, by the expenditure of large sums of money, the California Development Company constructed a heading and intake for the diversion of said water, and about 70 miles of canals and ditches, whereby said water was diverted and conveyed to and became available for the irrigation of about 500,000 acres of the lands described; that prior to the application of water to these lands they were part of an arid and desolate desert, wholly unproductive and valueless; that the enterprise of reclaiming these lands from the desert was undertaken and carried out by the California Development Company prior to the act of Congress of June 17, 1902, c. 1093, 32 Stat. 388 (U. S. Comp. St. Supp. 1907, p. 511), authorizing the expenditure of public moneys in aid of the irrigation of arid lands, and was of vast magnitude and created many million dollars' worth of wealth where none had existed before, and has been, and is, of great public benefit and advantage; that said water right is a prior right upon the waters of the Colorado river and of very great value, plaintiff being informed and believing that it is reasonably worth the sum of $1,500,000; that in furtherance of the purpose of the California Development Company to acquire the right to divert and apply to beneficial uses 500,000 miner's inches of the water flowing in the Colorado river, the company, on or about July 1, 1900, executed a deed of trust conveying all of its property to a trustee to secure a bond issue to the amount of $500,000, and the company thereafter issued and sold its bonds and used the proceeds thereof in and about its said business and in furtherance of its purposes as aforesaid; that the principal security for said bonds is the water right of the California Development Company and the heading, intake, and canals of the company, all of which are covered by and included in the deed of trust whereby said bonds are secured. Plaintiff further alleges that in the spring and summer of 1904, by reason of the incompetency of

Digitized by Google

one C. R. Rockwood, the engineer of the California Development Company, silt was allowed to accumulate in the intake for said water in that portion of the canal adjacent thereto, whereby it was difficult to divert the needed water from the Colorado river into the canals of the California Development Company; that thereafter, and in the month of September, 1904, the Mexican Company caused a cut to be made in the bank of the Colorado river and in the Republic of Mexico, and at a place where the bed of the river was much higher than the Mexican Company's canal; that the soil was loose and unstable at that point, and the river gradually widened making a breach in its bank at that point until it became impossible to control or manage the flow of the river; that the intake gradually became the bed of the entire Colorado river along and upon which the entire waters of the river flowed; that the lands irrigated by the water so appropriated and diverted by the California Development Company are all below sea level, and much lower than the bed of the Colorado river from which the water is taken; that further westward is a vast area or basin known as the Salton Basin, into which the water from the Colorado river has been caused to flow through the new cut in the bank of the river, and that this water covers about 400 square miles of this basin and is continually rising therein.

Plaintiff further alleges that the Southern Pacific Company operates a line of railroad through and across said Salton Basin, which line at some points is more than 200 feet below sea level; that some time in the month of February or March, 1905, the inflow of water from the Colorado river to said Salton Basin began to approach and threaten to submerge the railroad tracks of the Southern Pacific Company at different points in the Salton Basin; that about that time the Southern Pacific Company realized that a continuance of the inflow of the Colorado river into the Salton Basin would compel it to remove the line of tracks to higher ground, which would involve great expense to it; that thereupon the Southern Pacific Company conceived the purpose of acquiring control of the California Development Company upon the pretext of being interested in aiding said company in its colonization and development work, but in reality for the purpose of making large expenditures to protect its right of way and tracks in the name of and as an indebtedness against the California Development Company, and of saddling a large amount of indebtedness therefor upon said company in the form of loans from the Southern Pacific Company; that at the time the Southern Pacific Company conceived the purpose of gaining control of the California Development Company as aforesaid, that company was in financial straits and its credit greatly impaired; that by reason of such financial difficulties said company was constrained by its necessitous condition to accept a loan of $200,000 offered by said Southern Pacific Company in the month of May, 1905; that by the terms of said loan the California Development Company agreed to give the Southern Pacific Company control of its board of directors and of all its officers until such time as it should repay said loan with interest. In addition and at the same time the Southern Pacific Company secured by way of pledge 6,300 shares of the capital stock of the California Development Company,

Digitized by Google

such number of shares being a majority of the 12,500 shares of the capital stock of that corporation; that said agreement was so worded and drawn that it became forthwith hopelessly impossible for the California Development Company ever to extricate itself from the terms thereof; and the Southern Pacific Company thereupon became a creditor in possession with complete dominion and control over the assets of the California Development Company. The agreement, as set out in the amended bill of complaint is dated the 20th day of June, 1905, and contains the following, among other, provisions: It recites that the California Development Company is desirous of borrowing from the Southern Pacific Company the sum of $200,000 to be used by it in paying off certain of its floating indebtedness, and in completing and perfecting its canal system and that of the Mexican Company; that the Southern Pacific Company is to loan and advance to the California Development Company and at once pay into its treasury the sum of $200,000 which said loan is to be repaid by the California Development Company to the Southern Pacific Company on or before March 1, 1911, in installments as follows: $20,000 on or before March 1, 1907; $30,000 on or before March 1, 1908; $40,000 on or before March 1, 1909; $50,000 on or before March 1, 1910; $60,000 on or before March 1, 1911—all deferred payments to bear interest from date of advancement and payment of the money to the California Development Company until paid, at the rate of 6 per cent. per annum, payable semiannually. To secure this loan and the repayment thereof with interest as provided the California Development Company agrees to procure certain of its stockholders to pledge 6,300 shares of its capital stock; said stock to be deposited in pledge for such purpose with a trustee to be selected by the Southern Pacific Company, and not to be transferred on the books of the corporation during the life of the pledge unforeclosed, but to remain in the names of the owners thereof, who shall have the right to sell and transfer their respective interests in the same, subject always to said pledge and the purpose thereof; at the time of so depositing said stock in pledge the respective owners thereof shall execute to the trustee or pledgee, as selected by the Southern Pacific Company, irrevocable powers of attorney or proxies, giving to said trustee the right to vote said stock at all meetings of stockholders of the California Development Company held after 90 days' default in payment of any installment of said loan or in performance of any other of the agreements of the California Development Company therein contained, and while such default continues.

It is also provided in the agreement that to secure the loan and the repayment of the same, and to secure the Southern Pacific Company in making the same, it is agreed that during the continuance of the whole or any part of said loan unpaid the Southern Pacific Company is to have three members on the board of directors of the California Development Company, one of whom shall be, during said term, the duly elected president and general manager of the company and its business; to that end the California Development Company agrees to cause three members of its board of directors as then constituted to resign, and in their places and steads to cause to be elected three par-

Digitized by Google

ties to be selected for that purpose by the Southern Pacific Company, upon which being done the California Development Company is to cause the other members on its board of directors then in California to vote for and elect one of the three directors so selected and named by the Southern Pacific Company to the office of president and general manager of the California Development Company and its business. And in the event of any vacancy occurring in the office of director held by either of said persons elected by the Southern Pacific Company or in said office of president, then the California Development Company shall cause such person to be elected to said office as the Southern Pacific Company shall designate. Provided that such president shall be acceptable—that is, not objectionable—to at least two members of the board other than those named by the Southern Pacific Company. It is further provided that in addition to having the right of nominating three members of said board of directors as in the agreement provided for, all members of said board shall be acceptable—that is, not objectionable—to the Southern Pacific Company; that the president and general manager so selected shall have the power to name the California Development Company's secretary, treasurer, attorney, superintendents, chief engineer, and consulting engineer; the parties so named, however, to be acceptable to at least two members of the board of directors other than those named by the Southern Pacific Company. It is further provided in the agreement that the California Development Company, being the owner of nearly all of the stock of the Mexican Company, it will cause the board of directors of said Mexican Company to be composed of men satisfactory to the Southern Pacific Company, and that failure at any time while any part of said loan remains unpaid to elect as members of the board of directors of the California Development Company the three parties named therefor by the Southern Pacific Company, or failure to elect one of said parties as the president and general manager of the California Development Company as in the agreement provided, shall operate to cause and render all the balance of said loan then unpaid to become immediately due and payable. It is further provided that whenever the loan, principle, and interest has been repaid the stock deposited with the pledgee or trustee shall be returned, and then, and not before, the Southern Pacific Company will cause its three directors of the California Development Company to resign as such directors, and the California Development Company will thereupon "resume the full control and management of its affairs and its business." In a contract entered into between the California Development Company, the Mexican Company and the Southern Pacific Company on the same day as the foregoing, it is recited that it is the understanding of all the parties to the contract that a large part of the money so loaned to the California Development Company is for the real use and benefit of the Mexican Company in the work of repairing, constructing, and perfecting its canals and canal headings in the Republic of Mexico, the said loan being entirely made to the California Development Company instead of partly to that company and partly to the Mexican Company for the reason and because of the fact that the Mexican Company is a foreign corporation having all its properties in a foreign country beyond the jurisdiction of the

Digitized by Google

courts of the United States, and because of the further fact that the proportions of the said loan to be used by the California Development Company and by the Mexican Company cannot in advance be ascertained and determined. It is also recited in the contract that at the time of the agreement to make the loan it was agreed by the Mexican Company that it should guarantee the loan and the repayment thereof. The contract accordingly provides for such a guarantee on the part of the Mexican Company, and that it will cause its board of directors to elect the president and general manager of the California Development Company its general manager, and it will give to said general manager power and authority to handle and dispose of its properties in the Republic of Mexico, with power to contract and agree to furnish water for use on lands in Mexico at a rental of not less than 50 cents gold per acre per foot of water delivered. The contract also provides for the keeping of regular books of account showing the amounts of money advanced or paid out by the California Development Company for the Mexican Company and the amounts of money received by the former company belonging to or for the latter company.

Plaintiff further alleges that the California Development Company has an authorized capital of $1,250,000, divided into 12,500 shares of the par value of $100 each, and that all of said capital stock is outstanding; that the control and management of the affairs of the California Development Company is committed to a board of seven directors, and that said board was at the time of the execution of the contract of June 20, 1905, composed of certain persons whose names are given; that immediately after the execution of said contract three of the persons named resigned as directors, and three other persons were chosen as directors in their places as the representatives of the Southern Pacific Company; that these three directors were at that time and still are agents, employés, and servants of the Southern Pacific Company, and are acting as directors for the benefit and at the behest and under the direction and domination of the Southern Pacific Company; that immediately after these three representatives of the Southern Pacific Company were chosen as directors of the California Development Company one of them was chosen as president of said company, and ever since has acted as president in the interest of the Southern Pacific Company. Plaintiff further alleges that immediately after the execution of the aforesaid contract the Southern Pacific Company took and assumed full control and management of the business and affairs of said California Development Company and ever since has held and still holds such control and management and that the California Development Company has not paid, and by reason of such control by the Southern Pacific Company cannot pay the obligation of $200,000 created under and pursuant to said contract so as to be able to "resume the full control and management of its affairs and business" as provided by said contract; that $150,000 of said sum of $200,000 agreed to be advanced was loaned and advanced to the California Development Company by the Southern Pacific Company on or about July 22, 1905, and the remainder of $50,000 was loaned and advanced on or about September 22, 1905. Plaintiff further alleges

Digitized by Google

that under the provisions of the contract requiring that the other members of the board of directors of the California Development Company should be "acceptable—that is, not objectionable"—to the Southern Pacific Company, it was possible for the latter company to exclude, and it did exclude, from said board all save persons who would be subservient to the wishes and desires of the Southern Pacific Company; that accordingly the resignation of a fourth director was secured, and two persons were caused to be elected to fill the vacancy in succession, one after the other, and that both are wholly subservient to the Southern Pacific Company; that the object of the Southern Pacific Company in entering into the said contract was the saddling of debts for the maintenance of its right of way upon the California Development Company; that the Southern Pacific Company has railroad interests of vast magnitude and importance compared with which its interests as creditor of the California Development Company is insignificant; that it is indifferent to the interests of the bondholders and stockholders of said corporation; that since securing control of the California Development Company and dominion over its property and assets, the Southern Pacific Company has made large expenditures of money loaned and advanced to the California Development Company under said contract for the benefit of itself—the Southern Pacific Company; that said expenditures have not been made for the benefit of the California Development Company or the said Mexican Company at all, and have not benefited either or both of said companies, and it is charged that upwards of $300,000 has already been expended by the Southern Pacific Company in this way for his own benefit and without benefit to the California Development Company and the said Mexican Company, and saddled upon the California Development Company in the form of a debt to the Southern Pacific Company. Plaintiff further alleges that it is the purpose of the Southern Pacific Company so to manipulate the affairs and assets of the California Development Company that the holdings and interests of the stockholders will be rendered wholly valueless, and the Southern Pacific Company further purposes and intends, after having eliminated the rights and holdings of all the present stockholders of the California Development Company, to sell the valuable water rights of the California Development Company at a large price to the Reclamation Service of the United States, and to reap all the profit and benefit thereof themselves and to the injury of the plaintiff and all other stockholders of the California Development Company; and to accomplish this purpose by means of divers and sundry fraudulent and unlawful devices carried out through its agents and servants who have been made president and directors of the California Development Company, and by virtue of the control and dominion which the Southern Pacific Company has over the California Development Company and its assets and affairs under said contract.

To this amended bill of complaint both the defendants, appearing by the same counsel, demurred, on the ground that the plaintiff, by his own showing, was not entitled to the relief prayed for against the defendants or either of them; that the court had no jurisdiction to hear or determine the suit, and that the bill of the plaintiff is wholly

Digitized by Google

without equity. The court sustained the demurrer and entered a decree dismissing the bill. The plaintiff has appealed.

It is urged as an objection to the bill that it is without equity, because the money loaned under the contract which it is the object of the suit to cancel has not been restored, and there is no offer of restoration. In our opinion the objection is based upon an erroneous view of the cause of action. The plaintiff does not bring this suit to establish any individual right of his own, but for the benefit of the California Development Company, of which he is a minority stockholder. He has received nothing in the transaction which is the subject of this controversy, and therefore has nothing to restore. His authority to speak for the corporation is to pray the court to do equity in determining the rights of the parties. But the important feature of the cause of action as set forth in the amended bill of complaint is that there is nothing to restore to the Southern Pacific Company by the California Development Company or its stockholders. It is distinctly alleged that the "Southern Pacific Company has made large expenditures of money loaned and advanced to said California Development Company, under said contract * * * for the benefit of itself—the said Southern Pacific Company; that said expenditures have not been made for the benefit of said California Development Company or said Mexican Company at all, and have not benefited either or both said companies * * *; that upwards of $300,000 has already been expended by said Southern Pacific Company in the above way, * * * and without benefit to said California Development Company and said Mexican Company, and saddled upon said California Development Company in the form of a debt to said Southern Pacific Company." There are other allegations in the amended bill charging acts on the part of the Southern Pacific Company to secure the control of the California Development Company for the purpose of making large expenditures to protect its right of way and tracks in the name of and as an indebtedness of said California Development Company and of saddling a large amount of indebtedness therefor upon said California Development Company in the form of a loan by the said Southern Pacific Company. If these allegations are true, and they must be so treated in determining the sufficiency of the bill upon the demurrer, the Southern Pacific Company has appropriated to its own uses and purposes the money it has pretended to loan to the California Development Company, and this it has accomplished under the terms of the contract giving it control of that corporation. The appeal to equity is that the California Development Company may be relieved of this assumed indebtedness by a cancellation of the contract. In this aspect of the case it is manifest that neither the plaintiff nor the California Development Company should be required to offer to restore money the corporation has never received for its own use or benefit. If the court shall hereafter ascertain the fact to be otherwise than as alleged in the bill, it will direct the parties to do equity in accordance with such facts.

The next question to be determined is whether the contract is ultra vires. Section 12 of the act of the Legislature of New Jersey (P. L. 1896, p. 281), under which the California Development Company was incorporated on or about the 23d day of April, 1896, provides:

Digitized by Google

"The business of every corporation shall be managed by its directors, who shall respectively be shareholders therein; they shall be not less than three in number, and, except as hereinafter provided (the exception is not material in this case), they shall be chosen annually by the stockholders at the time and place provided in the by-laws, and shall hold office for one year and until others are chosen and qualified in their stead."

Under the law the control and management of the affairs of the California Development Company was committed by its incorporators to seven directors. In paragraph 2 of the agreement of June 20, 1905, the California Development Company by its president and secretary agreed to cause three members of its board of directors as then constituted to resign and in their places and steads to cause to be elected three parties to be selected for that purpose by the Southern Pacific Company. The provision of the statute that the directors shall be shareholders and shall be chosen annually by the stockholders appears to be set aside by this agreement as to three of the seven directors, and the selection of these three directors vested in the Southern Pacific Company "during the continuance of the whole or any part of said loan unpaid."

Section 13 of the New Jersey act provides that:

"Every corporation organized under this act shall have a president, secretary and treasurer, who shall be chosen either by the directors or stockholders, as the by-laws may direct, and shall hold their offices until others are chosen and qualified in their stead."

In paragraph 2 of the agreement it is provided that upon the election of the three directors selected by the Southern Pacific Company the California Development Company is to cause the other members on said board then in California to vote for and elect one of the three directors so selected and named by the Southern Pacific Company to the office of president and general manager of the California Development Company and its business. It is further provided in the agreement that in the event of any vacancy occurring in the office of director held by either of said persons elected by the Southern Pacific Company or in said office of president, then the California Development Company shall cause such person to be elected to said office as the Southern Pacific Company shall designate, provided that such president shall be acceptable—that is, not objectionable—to at least two members of the board other than those named by the Southern Pacific Company. It is further provided that in addition to having the right of nominating three members of said board of directors as provided in the agreement all members of the board shall be acceptable—that is, not objectionable—to the Southern Pacific Company. Under the agreement, the president of the corporation, instead of being chosen either by the directors or stockholders, as the by-laws may provide, is selected by the Southern Pacific Company. The law requires that the secretary like the president shall be chosen either by the directors or stockholders as the by-laws may direct. In paragraph 3 of the agreement it is provided that the president and general manager of the California Development Company so selected shall have the power to name the secretary, acting superintendent, chief engineer and consulting engineer of the corporation, the persons so named, however,

Digitized by Google

to be acceptable to at least two members of the board of directors of the corporation other than those named by the Southern Pacific Company. These provisions of the agreement are clearly contrary to the provisions of the law under which the corporation was organized, and are contrary to the laws of this state, under which it is exercising its authority and doing business as a corporation.

There is, however, another provision of the agreement to be considered in this connection. It is provided in paragraph 4 of the agreement that to further secure the loan and its repayment with interest the California Development Company agrees to procure certain of its stockholders to pledge 6,300 shares of its capital stock to be deposited with a trustee to be selected by the Southern Pacific Company, the owners of the stock to execute to the trustee so selected irrevocable powers of attorney or proxies giving to said trustee the right to vote said stock at all meetings of stockholders of the California Development Company held after 90 days' default in payment of any installment of said loan or in performance of any other of the conditions of the agreement on the part of the California Development Company and while such default continues. Does this power of control given to the Southern Pacific Company over the affairs of the California Development Company by the transfer of a majority of its shares of stock render immaterial the method provided in the agreement for the selection of the officers of the corporation and their terms of office? In other words, if the Southern Pacific Company has secured the control and management of the California Development Company by procuring the control of a majority of its shares, and is thus enabled to elect its officers and direct its affairs, is it of any consequence that the agreement provides a method wholly at variance with the law for the selection of such officers and their terms of service?

We are of opinion that the method provided by the statute for the election of the officers of the corporation, their qualification, and their terms of service cannot be set aside even by the vote of the majority of the shareholders. But, aside from the conflict between the terms of the agreement and the law under which the California Development Company was incorporated, the action of the corporation in carrying out the terms of the agreement as alleged in the bill amounts to a complete surrender of the management and control of the California Development Company to the Southern Pacific Company, another corporation formed for a different purpose and carrying on a wholly different business. The purpose of a grant of corporate power is that the corporation shall exercise its powers and carry on its business through its own officers and agents and not through officers and agents selected by another corporation. 1 Mor. Priv. Corp. p. 431; Buckeye Marble & Freestone Co. v. Harvey, 92 Tenn. 115, 20 S. W. 429, 18 L. R. A. 252, 36 Am. St. Rep. 71. And that it shall maintain an independent corporate existence, and not surrender the control of its affairs or the exercise of its power to another corporation. Anglo-American Land M. & A. Co. v. Lombard, 132 Fed. 721, 736, 68 C. C. A. 89. There are undoubtedly instances where the control and management of one corporation by another is justified by the character of the business in which they are engaged, and the complete harmony of

Digitized by Google

interests existing between the two corporations. The control and management of the Mexican Company by the California Development Company as set forth in the bill appears to be such a case, but we have found no case where the courts have sanctioned such control and management where there are conflicting interests of the character charged in the bill as existing between the California Development Company and the Southern Pacific Company with respect to the business and affairs of the former corporation. The surrender of corporate authority on the part of the California Development Company, as set forth in the bill, is manifestly against public policy, and the contract under which the surrender is made so clearly contrary to the law under which the corporation was created that it must be declared ultra vires and void.

The defense of estoppel is not applicable to the facts as stated in the bill of complaint. If the money loaned under the agreement by the Southern Pacific Company to the California Development Company has been expended by the Southern Pacific Company for its own use and benefit, and not for the use or benefit of the California Development Company or the Mexican Company the rule of estoppel does not apply, nor does it apply to the ultra vires agreement alone. The Supreme Court of the United States in Central Transportation Co. v. Pullman Car Co., 139 U. S. 59, 11 Sup. Ct. 478, 35 L. Ed. 55, has stated the rule applicable to this case as follows:

"A contract of a corporation, which is ultra vires in the proper sense—that is to say, outside the object of its creation, as defined in the law of its organization, and therefore beyond the powers conferred upon it by the Legislature—is not voidable only, but wholly void, and of no legal effect. The objection to the contract is, not merely that the corporation ought not to have made it, but that it could not make it. The contract cannot be ratified by either party, because it could not have been authorized by either. No performance on either side can give the unlawful contract any validity, or be the foundation of any right of action upon it. When a corporation is acting within the general scope of the powers conferred upon it by the Legislature, the corporation, as well as persons contracting with it, may be estopped to deny that it has complied with the legal formalities which are prerequisites to its existence or to its action, because such requisites might in fact have been complied with. But when the contract is beyond the powers conferred upon it by existing laws, neither the corporation, nor the other party to the contract, can be estopped, by assenting to it, or by acting upon it, to show that it was prohibited by those laws."

The rule is also applicable to the further objection that the plaintiff has been guilty of laches, and is therefore estopped by his conduct from maintaining this action. Furthermore, the agreement in controversy is dated June 20, 1905. The amended bill was filed February 12, 1906. When the original bill was filed does not appear. There is therefore nothing in the record that would justify the court in determining that the plaintiff had been guilty of laches in bringing the action. In any view of the case the court cannot apply the law of estoppel to plaintiff's conduct.

The decree of the Circuit Court is reversed, with directions to overrule the demurrer.

ROSS, Circuit Judge (dissenting). I am unable to agree to the judgment in this case. The appellant sued as a dissatisfied stockholder

Digitized by Google

of the California Development Company, and as such only. Manifestly, therefore, he can have no other or greater right to maintain the suit than would that corporation, were it the complainant. Smith v. Ferries & C. H. Ry. Co. (Cal.) 51 Pac. 715, 716; Chetwood v. Cal. National Bank, 113 Cal. 425, 45 Pac. 704; Garretson v. Pacific Crude Oil Co., 146 Cal. 184, 79 Pac. 838; 10 Cyc. 1160. Would the California Development Company be entitled to the relief here sought upon a like bill? I think not. In the bill, these, among other facts, are expressly alleged:

"12. Your orator shows that heretofore and some time in or about the spring and summer of 1904, by reason of the incompetency of one C. R. Rockwood, the engineer of said California Development Company, silt was allowed to accumulate in the intake for said water in that portion of the canal of said company adjacent thereto, whereby it was difficult to divert the needed water from said Colorado river into the canals of said California Development Company; that thereafter and some time in or about the month of September, 1904, said Mexican Company caused a cut to be made in the bank of said Colorado river and in the Republic of Mexico, and at a place where the bed of said river was much higher than said Mexican Company's canal; that the soil was loose and unstable at said point, and the said river gradually widened a breach in its said bank at said point until it became impossible to control or manage the flow of said river; that said intake gradually became, and now is, the bed of the entire Colorado river along and upon which the entire waters of said river flow; that the lands irrigated by the water so appropriated and diverted by said California Development Company are all below sea level and much lower than the old bed of the Colorado river, from which said waters are taken; and that further westward is a vast area or basin lying many feet below sea level, into which said waters were, by said new cut and point of diversion, caused to flow, and now are flowing, which said basin is known as 'Salton Basin.' That said waters have now covered about 400 square miles of said basin and are gradually rising therein.

"13. Your orator further shows that the defendant Southern Pacific Company operates a line of railroad through and across said Salton Basin, which line at some points is more than two hundred feet below sea level; that some time in the month of February or March, 1905, the inflow of water from the Colorado river to said Salton Basin began to approach and threaten to submerge the railroad tracks of said Southern Pacific Company at different points in said Salton Basin; that, as your orator is informed and believes, and upon such information and belief alleges, at or about said time said Southern Pacific Company realized that a continuance of said inflow into said Salton Basin from the said Colorado river would compel it to abandon many miles of its said railroad or remove the same to higher ground, which would involve great expense to it; and that, at or about said time, said Southern Pacific Company conceived the purpose of acquiring control of the defendant California Development Company, upon the pretext of being interested in aiding said company in its colonization and development work, but in reality for the purpose of making large expenditures to protect its right of way and tracks in the name of, and as an indebtedness against, said California Development Company, and of saddling a large amount of indebtedness therefor upon said company, in the form of loans from the said Southern Pacific Company. * * *

"15. That, at the time said Southern Pacific Company conceived the purpose of gaining control of said California Development Company as aforesaid, said California Development Company was in financial straits and its credit was greatly impaired, and its then president, A. H. Heber, had been obliged to pledge his personal assets to obtain loans for the company; and that, by reason of such financial difficulties, said company was constrained, by its necessitous condition, to accept a loan of $200,000, offered by said Southern Pacific Company some time in or about the month of May, 1905; that, by the terms of said loan, said California Development Company agreed to give to the Southern Pacific Company control of its board of directors and of all its affairs, until

Digitized by Google

such time as it should repay said loan with interest, and in addition and at the same time said Southern Pacific Company got control of a majority, to wit, 6,300 shares of its capital stock, by way of pledge; that said agreement was so worded and drawn that it became forthwith hopelessly impossible for said California Development Company ever to extricate itself from the terms thereof, and said Southern Pacific Company then and there became a creditor in possession and having complete dominion and control over the assets of said California Development Company; that all of the foregoing and other provisions of said agreement more fully appear from said agreement," which agreement, together with the agreement between the development company, the Mexican Company, and the Southern Pacific Company, which is annexed to and made a part of that between the development company and the Southern Pacific Company, are fully set out in the bill—that between the development company and the Southern Pacific Company reciting:

"'That, whereas party of the first part (the development company) is desirous of borrowing from party of the second part (the Southern Pacific Company), on the terms hereinafter set out, the sum of two hundred thousand ($200,000.00) dollars to be used by it in paying off certain of its floating indebtedness, and in completing and perfecting the canal system of first party and of that certain corporation known as the Mexican Company; and whereas, on the terms and conditions hereinafter set out, party of the second part is willing to make such loan; now therefore, in consideration of the premises aforesaid and of the several mutual covenants and promises herein contained, the parties hereto do hereby covenant, promise and agree as follows, to wit: 1. Party of the second part is to loan and advance to party of the first part, and at once pay into its treasury the sum of two hundred thousand ($200,000.00) dollars; which said loan is to be repaid by first party to second party on or before March 1st, 1911, in installments as follows: Twenty thousand ($20,000.00) dollars on or before March 1st, 1907; thirty thousand ($30,000.00) dollars on or before March 1st, 1908; forty thousand ($40,000.00) dollars on or before March 1st, 1909; fifty thousand ($50,000.00) dollars on or before March 1st, 1910; and sixty thousand ($60,000.00) dollars on or before March 1st, 1911—all deferred payments to bear interest from date of advancement and payment of the money hereunder to first party, until paid, at the rate of six (6) per cent. per annum, payable semiannually, and which said sum, with the interest thereon, first party agrees to pay to second party in installments as above fixed and set out,' etc., etc., and the annexed agreement between the development company, the Mexican Company, and the Southern Pacific Company, reciting: 'That whereas parties of the first (the development company) and third (the Southern Pacific Company) parts, at the time of the execution hereof as a part of this same transaction, have entered into and executed the foregoing and annexed contract or agreement in writing; and, whereas, under said agreement, party of the third part (the Southern Pacific Company) is to loan and advance to party of the first part (the development company) the sum of two hundred thousand dollars ($200,000.00) therein mentioned under the terms and conditions and for the purposes mentioned in said foregoing contract; and, whereas, it is the understanding of all the parties hereto that a large part of the money so loaned to party of the first part (the development company) is for the real use and benefit of party of the second part (the Mexican Company) in the work of repairing, construing (constructing) and perfecting its canals and canal headings in the Republic of Mexico, the said loan being entirely made to party of the first part (the development company) instead of partly to party of the first part (the development company) and partly to party of the second part (the Mexican Company), for the reason and because of the fact that party of the second part (the Mexican Company) is a foreign corporation having all of its properties in a foreign country, beyond the jurisdiction of the courts of the United States, and because of the further fact that the proportions of the said loan to be used by party of the first part (the development company) and by party of the second part (the Mexican Company) cannot in advance be ascertained or determined; and, whereas, at the time of the agreeing to the making of said loan, it was agreed by party of the second part (the Mexican Company) that it should guarantee the said loan and the repayment thereof; now, therefore, in consideration of

Digitized by Google

the premises aforesaid, and in consideration of the entering into and execution of the foregoing contract hereto annexed, the said parties of the first and second parts do hereby covenant, promise, and agree' as specifically set forth in the agreement."

The bill further expressly alleges "that $150,000 of said sum of $200,000 so agreed to be advanced was loaned and advanced to said California Development Company by defendant Southern Pacific Company on or about July 22, 1905, and the remainder, to wit, $50,000 was so loaned and advanced on or about September 22, 1905."

The twentieth paragraph of the bill is as follows:

"Your orator further shows that since securing control of said California Development Company and dominion over its property and assets, as hereinabove stated, defendant Southern Pacific Company has made large expenditures of money loaned and advanced to said California Development Company, under said contract set forth in paragraph 15 hereof, for the benefit of itself—the said Southern Pacific Company; that said expenditures have not been made for the benefit of said California Development Company or said Mexican Company at all, and have not benefited either or both said companies, and your orator is informed and believes, and upon such information and belief charges the fact to be, that upwards of $300,000 has already been expended by said Southern Pacific Company in the above way, and for its own benefit and without benefit to said California Development Company and said Mexican Company, and saddled upon said California Development Company in the form of a debt to said Southern Pacific Company."

It thus appears from the express averments of the bill itself that the Southern Pacific Company loaned to the California Development Company, and paid into its treasury, the sum of $200,000 upon the terms and conditions stated in the two agreements above referred to, and while the bill does allege in the paragraph last above quoted that the Southern Pacific Company "has made large expenditures of money loaned and advanced to said California Development Company, under said contract set forth in paragraph 15 hereof, for the benefit of itself, the said Southern Pacific Company, and that said expenditures have not been made for the benefit of said California Development Company or said Mexican Company at all, and have not benefited either or both said companies," it does not allege how much of the money so loaned and advanced to the California Development Company the Southern Pacific Company has expended for its own exclusive benefit. There is no averment that all of the money loaned by the Southern Pacific Company to the development company was expended by the former for its own benefit. The general allegation contained in paragraph 20 of the bill "that upwards of $300,000 has already been expended by said Southern Pacific Company in the above way, and for its own benefit and without benefit to said California Development Company and said Mexican Company, and saddled upon said California Development Company in the form of a debt to said Southern Pacific Company," is far from being an averment that all of the money loaned by the latter company to the California Development Company was expended by the Southern Pacific Company for its own benefit. It should be remembered that the rule is well established that pleadings must be taken most strongly against the pleader, and that a demurrer admits only the truth of such facts as are well pleaded. Nei-

Digitized by Google

ther the alleged conclusions nor inferences of the pleader amount to anything.

In my opinion the court below was right in holding the complainant's suit subject to the maxim that "he who seeks equity must do equity," and that without the return of at least such of the money loaned by the Southern Pacific Company to the development company, of which the complainant was a stockholder, that was not expended by the Southern Pacific Company for its own exclusive benefit, he could not be entitled to the relief sought.

(161 Fed. 18.)

KRAUS et al. v. CONGDON et ux.

(Circuit Court of Appeals, Ninth Circuit. March 7, 1908.)

No. 1,474.

1. TAXATION—ACTION TO RECOVER LAND SOLD FOR TAXES—LIMITATION UNDER WASHINGTON STATUTE.

   Code Wash. 1881, § 2939, limiting the time for bringing suits to recover lands sold for taxes to three years, was a part of Act Dec. 1, 1881, "to provide for the assessment and collection of county and territorial revenue," and was repealed by Act March 15, 1893, p. 385, c. 124, § 137, which expressly repeals "all acts and parts of acts heretofore enacted by the Legislature of the territory or state of Washington providing for the assessment and collection of taxes in this state."

2. SAME—PLEADING—ADMISSIONS IN BILL.

   In a bill to set aside a tax title, which sets out the proceedings for selling the property, and alleges their invalidity, a statement that a deed was issued, "whereby and by the terms of which said county treasurer granted and conveyed" the property to the grantee, cannot be construed as an admission that the title passed by such deed.

3. SAME—RIGHT TO MAINTAIN.

   In a suit under Ballinger's Ann. Codes & St. Wash. § 5521 (Pierce's Code, § 1156), by one in possession of lands, to set aside a tax title thereon, plaintiff is not required to plead title in himself, nor to prove it even if alleged.

4. TRESPASS—TITLE TO SUPPORT ACTION—TAX TITLE—CONSTRUCTIVE POSSESSION BY PURCHASER.

   An invalid tax deed does not give the holder constructive possession of the property, so as to render another who enters upon and takes actual possession of it a trespasser, nor does the continued payment of taxes thereon by the holder of such deed.

5. QUIETING TITLE—SUIT UNDER WASHINGTON STATUTE—POSSESSION TO SUPPORT.

   Under Ballinger's Ann. Codes & St. Wash. § 5521 (Pierce's Code, § 1156), which authorizes any one in possession of real property to maintain a suit to determine an adverse claim thereto, it is immaterial that possession was taken for the purpose of instituting the suit, if it was not tortious or in violation of the prior possession of another.

6. COURTS—FEDERAL COURTS—ENFORCEMENT OF REMEDY GIVEN BY STATE STATUTE.

   A right given by a state statute to one in possession to maintain a suit to quiet title may be enforced in the federal courts.

   [Ed. Note.—For cases in point, see Cent. Dig. vol. 13, Courts, §§ 972, 973.

   State laws as rules of decision in federal courts, see notes to Wilson v. Perrin, 11 C. C. A. 71; Hill v. Hite, 29 C. C. A. 553.]

Ross, Circuit Judge, dissenting.

Digitized by Google

Appeal from the Circuit Court of the United States for the Southern Division of the Eastern District of Washington.

Fred Parker, for appellants.

E. B. Preble and A. L. Agatin, for appellees.

Before GILBERT, ROSS, and MORROW, Circuit Judges.

GILBERT, Circuit Judge. As the facts in this case are set forth in the dissenting opinion in this case, it is unnecessary to state them here. It is not contended in this court that a valid tax title to the premises in controversy was ever acquired by the appellants, but it is urged that the court below erred in ruling that the suit was not barred by that provision of the act of the Legislature of Washington, approved Dec. 1, 1881, which was embodied in the Code of that year as section 2939. That section provides as follows:

"Any suit or proceeding for the recovery of lands sold for taxes, except in cases when the taxes have been paid or the land redeemed as provided by law, shall be commenced within three years from the time of recording the tax deed of sale, and not thereafter, except by the purchaser at the tax sale."

We think there can be no doubt that this provision of the statutes has been repealed. When adopted, it was a part of an act entitled "an act to provide for the assessment and collection of county and territorial revenue," which purported to be a complete system of taxation. A new revenue act and system of taxation went into effect on March 15, 1893, p. 385, c. 124, § 137, of which provides:

"All acts and parts of acts heretofore enacted by the Legislature of the territory or state of Washington, providing for the assessment and collection of taxes in this state, shall be, and the same are, hereby repealed."

Section 2939 of the Code of 1881 was a part of the revenue act of that year, which provided for the assessment and collection of taxes. Being a part of that act, it is repealed by the subsequent act of 1893. The Supreme Court of Washington so construed the law in an analogous case. Tacoma School Dist. v. Hedges, 13 Wash. 69, 42 Pac. 522.

Should the demurrer to the bill of complaint have been sustained on the ground that the appellees made contradictory allegations therein as to the title, and in substance admitted the title to be in the appellants? We find no ground for so holding. The bill alleged title in fee and possession of the premises in the appellees, the delinquency of taxes on said property, the entry of a pretended judgment and lien for the unpaid taxes, the sale under the pretended judgment, and the purchase thereof by one of the appellants, and the execution of a tax deed to such purchaser, and then set forth the defects in the tax proceedings, which show on their face the invalidity of the title thereby attempted to be acquired. It alleged that, by reason of these defects so set forth, the tax deed under which the appellants claim is and was wholly void and of no effect, and the prayer was that it be so adjudged and decreed by the court. These allegations are not contradicted by the language of the eighth paragraph of the bill, in which, in describing the conveyance made to the defendants, it is alleged that a tax deed was issued bearing date May 18, 1901, "whereby and

Digitized by Google

by the terms of which, said county treasurer granted and conveyed unto said Charles F. Kraus, his heirs and assigns, the real estate and premises aforesaid, which said deed was in the form prescribed by law and purported to have been given pursuant to the aforesaid judgment." It is clear that the pleader intended to, and did, by this allegation describe only the purport and tenor of the conveyance. It is true that, by the terms of that deed, so far as its mere terms are concerned, the county treasurer granted the described property to Kraus, and his heirs and assigns; but it does not follow that by so stating the appellees alleged that title passed thereby. On the contrary, the bill distinctly alleged that title did not pass thereby. Such was the understanding of the pleading by court and counsel in the court below. Counsel for the appellants accepted the bill as sufficient in that respect, and they make no contention in this court, and we may presume that none was made in the trial court, that the appellees had alleged the title to be in the appellants. There was a demurrer, on the ground that it appeared from the bill that the complainants therein had no title to the property; but that was based solely on the contention that the defects in the tax proceedings as set forth were not such as to invalidate the alleged tax title. It has not occurred to the ingenuity of counsel for the appellants to contend that the eighth paragraph of the bill expressly alleged the title to be in them.

The appellants earnestly contend that the trial court erred in holding that the appellees had an interest in the subject-matter of the suit such as to authorize them to maintain the suit. The bill alleged that the appellees were the owners in fee, and were in the possession of the premises in controversy. On the trial they produced no proof of their title. The statute under which this suit was brought does not require that the plaintiff shall have the title or any interest in the property. "Where the statute authorizes any one in possession to maintain the suit, mere possession without title is sufficient to maintain it as against a trespasser or one who establishes no title in himself." 17 Ency. of Pleading & Practice, 314; Gillis v. Downey, 85 Fed. 483, 488, 29 C. C. A. 286; Durell v. Abbott, 6 Wyo. 265, 44 Pac. 647; Scorpion v. Marsano, 10 Nev. 370; Calderwood v. Brooks, 45 Cal. 519. Since they were not required to plead the title, the appellees were not obliged to offer proof of title when they had pleaded it. Wilder v. City of St. Paul, 12 Minn. 192 (Gil. 116).

We find no ground for the assumption that the appellees were trespassers, or that their possession was obtained by fraud, collusion. or other wrong. There is nowhere in the record any suggestion of fraud or collusion. In order to make their entry a trespass, there must have been possession at the time in the appellants; for it is a well-settled rule that in order to maintain trespass quare clausum fregit, there must be either actual possession in the plaintiff at the time of the trespass, or a constructive possession based upon the legal title. Actual and constructive possession are the only forms of possession known to the law. Constructive possession, or legal possession as it is sometimes called, is that possession which the law imputes to the holder of the paramount title to unoccupied land. 28 Ency. of Law, 239. Simmons Creek Coal Co. v. Doran, 142 U. S. 442, 12 Sup. Ct.

Digitized by Google

239, 35 L. Ed. 1063. The defendants clearly had no constructive possession, because they had not the legal title. There is no such thing as constructive possession based on color of title. Had they the actual possession? The appellants in their brief admit that the lots were "vacant, and not occupied by any one," and that there were no improvements thereon. The utmost of their contention in that regard is that they claimed the lots and had paid the taxes thereon. Their mere claim of ownership was no act of possession, and the same is true of their payment of the taxes. "The payment of taxes upon land does not constitute actual possession of it" (1 Cyc. 992), and the weight of authority is that the payment of taxes is not even to be regarded as a circumstance to be considered with other facts as proof of possession (Id., and cases there cited).

The question here is not what motive had the appellees in entering into possession, but what rights of the appellants were invaded thereby. It is immaterial that the possession was taken for the purpose of instituting the suit, so long as the appellees did not act tortiously or disturb a prior possession in another. Apperson v. Allen, 42 Mo. App. 539. The Supreme Court of the state of Washington has held that, under the statute, possession is sufficient to warrant the action to quiet title. Bird v. Winyer, 24 Wash. 276, 64 Pac. 178; Shelton Logging Co. v. Gosser, 26 Wash. 126, 66 Pac. 151. The case last cited was decided on the averments of the complaint. The plaintiff therein, instead of simply alleging title and possession, proceeded to set up the source and deraignment of its title. It was held that, inasmuch as the plaintiff had set out the nature of its claim of title, the court was called upon to pass on the question whether it had title, and found that it had none. But the court said: "We understand the rule to be that, in the absence of any showing to the contrary, possession, as a matter of evidence prima facie, establishes title"—and further said: "It may be that all that the appellant was required to do to make out a prima facie case was to establish possession."

A right so created by a state statute and interpreted by state courts will be enforced in the federal courts in the same manner in which other equitable rights of parties will be enforced. In Central Pac. R. Co. v. Dyer, 1 Sawy. 641, Fed. Cas. No. 2,552, Field, Circuit Justice, held that the statute of Nevada, identical with that of Washington, enlarges the class of cases in which the jurisdiction of equity was formerly exercised in quieting title, and that the right thereby created would be enforced in the national courts. In Holland v. Challen, 110 U. S. 15, 3 Sup. Ct. 495, 28 L. Ed. 52, it was held that a statute of Nebraska, giving a right to one, whether in possession or not, claiming the title to real estate against any person or persons who claimed an adverse estate therein, to quiet the title thereto, created an enlargement of equitable rights, which may be administered in the federal courts as well as in the courts of the state.

The decree is affirmed.

ROSS, Circuit Judge (dissenting). The appellees filed in the court below a bill against Charles F. Kraus, Ethel Kraus, his wife, and

Digitized by Google

Ada Maud Kraus, to quiet their alleged title to three certain, separate, and distinct, but adjoining lots of land, known and described as lots 1, 2, and 3 of block 231, in the city of North Yakima, state of Washington. In their bill it is expressly alleged that on the 31st day of January, 1898, certain taxes, that had theretofore been levied upon each of the lots, became a lien thereon for a certain specified sum; and, remaining unpaid for the years 1891 to 1895, inclusive, there was on said 31st day of January, 1898, duly issued, under and in pursuance of the tax laws of the state then in force, certain certificates of delinquency, covering each of the lots, by virtue of which the county treasurer "duly sold, assigned, transferred, and set over unto the county of Yakima or its assigns, the lien of the state of Washington, of the county of Yakima, in and to each of said lots, respectively, and that the amount for which each of said certificates of delinquency was thus issued to said county on said day by said treasurer was respectively the sum of $27.68, and for no other or different sum, the same being the full amount due for all taxes and interest on each of said lots, and remaining unpaid and delinquent for the aforesaid years, 1891 to 1895, inclusive."

The bill further expressly alleges that thereafter, and on the 1st day of February, 1901, for the stated consideration of $27.68, principal, and $12.48, interest, the said county treasurer, by an instrument in writing bearing that date, duly sold and assigned, to the defendant Charles Kraus, each of the said certificates of delinquency, upon which he, on the 15th day of February, 1901, commenced suit in the superior court of the state in and for Yakima county, against one W. N. Pratt, to foreclose his lien upon each of said lots, in which action a "pretended" judgment was given and entered May 2, 1901, "whereby it was, among other things, adjudged and decreed that said Charles F. Kraus had a good and lawful lien against said lots of land for the following sums, to wit: The sum of $68.01 against lot 1, the sum of $67.44 against lot 2, and the sum of $67.45 against lot 3, which said amounts, respectively, were adjudged to be several judgments against said lots of land, and said judgment further directing and ordering the county treasurer of said county to sell, according to law, the premises aforesaid, or so much thereof as might be necessary to satisfy the judgment, with interest and costs." The bill further expressly alleges that thereafter, and on the 18th day of May, 1901, the county treasurer, acting under and by virtue of the "pretended" judgment, proceeded to sell, and—

"did sell, at public auction each of said lots, respectively, and that each of said lots was bid in and struck off to said Charles F. Kraus, for the following amounts, respectively, to wit: Lot 1 for $68.01; lot 2 for $67.44, and lot 3 for $67.45. That thereupon, and on the 18th day of May, 1901, the aforesaid county treasurer issued and delivered to said Charles F. Kraus, under the provisions of the tax laws of the state of Washington, in such case made and provided, a tax deed bearing date on said May 18, 1901, whereby and by the terms of which said county treasurer granted and conveyed unto said Charles F. Kraus, his heirs and assigns, the real estate and premises aforesaid, which said deed was in the form prescribed by law, and purported to have been given pursuant to the aforesaid judgment of superior court of Yakima county, made and entered on May 2, 1901, and the statute in such case made and provided, which said deed was thereafter, and on the same day, duly

Digitized by Google

recorded in the office of the auditor of said county, in Book 7 of Deeds on page 5. That by force of the provisions of the tax laws of the state of Washington the tax deed so made is intended to vest in the grantee, his heirs and assigns, the title to the property therein described, without further acknowledgment or evidence of such conveyance. That after the execution and delivery of said tax deed, and on or about the 24th day of May, 1901, the said defendant Charles F. Kraus (and) his wife, by deed of conveyance bearing said date, conveyed to the defendant Ada Maud Kraus, lot 1 in said block 231, and that the only title or estate which said Charles F. Kraus and wife had in or to said lot was founded and predicated upon the aforesaid tax deed and tax judgment sale, and not otherwise, and that said Ada Maud Kraus claims no title to said lot from any source other than as aforesaid, and that said defendants Charles F. Kraus and Ethel Kraus, his wife, neither have nor claim any right, title, or interest in and to said lots 2 and 3, except by virtue of the tax deed and sale as aforesaid."

The bill proceeds further, and sets out in full the summons issued in the suit brought by Kraus to foreclose the tax liens, and the affidavit for its publication, and then alleges that the affidavit was insufficient to justify the publication of summons, that the summons itself was insufficient, and that the judgment was and is void for various reasons stated in the bill.

The defendants demurred to the bill on the grounds that it appears from the bill itself that the complainants have no interest in the subject-matter of it; that they are not entitled to the relief sought, or to any relief, and that it appears from the bill itself that the cause of action, if the complainants ever had any, is barred by the statute of limitations of the state of Washington. The demurrer was overruled by the trial court; and, the defendants standing upon their demurrer, an order was entered to the effect that a decree be taken pro confesso against each of the defendants. This order was subsequently set aside in so far as it concerned the defendant Ada Maud Kraus, who was a minor, and for whom a guardian ad litem had been appointed. The minor by her guardian ad litem subsequently filed an answer, and the suit as to her came on for trial on its merits. And this was the entire evidence introduced on the part of the complainants to sustain their alleged title:

The judgment roll in the suit of Charles F. Kraus against W. N. Pratt, the deed of May 18, 1901, by the treasurer of Yakima county to Charles F. Kraus for the three lots in question, the deed of May 24, 1901, from Charles F. Kraus and his wife, Ethel Kraus, to Ada Maud Kraus for lot 1 of block 231, and the following witnesses: Allen S. Davis, whose testimony was only to the effect that he was present on the 17th day of February, 1906, and saw E. B. Preble tender to the minor defendant, on behalf of the complainant Chester A. Congdon, $140.15 for the taxes, penalties, and interest that had accrued on the lot covered by the deed to her, to wit, lot 1 of block 231. Next, Albert S. Congdon, a brother of the complainant Chester A. Congdon, testified to the effect that he had resided in North Yakima for eight years, during which time he knew the lots of land in question, and the defendant Charles F. Kraus; that he, the witness, was then engaged in the real estate business, and knew the value of the lots in question; that lot 1 was worth a little over $5,000, and the three lots

Digitized by Google

the aggregate amount of $15,000. This witness was then questioned, and answered on direct examination as follows:

"Q. On the 17th of February, 1906, at the time of the commencement of this suit, who was in possession of said lots 1, 2, and 3 in block 231? A. I don't know the date the action was commenced. We took possession after the fence was built, and have ever since; but whether that was on the 17th of February, 1906, I don't remember. Prior to that time, I suppose Mr. Kraus was in possession. I and Preble, acting in employ of defendant (complainant) Chester A. Congdon, took possession. Q. Prior to that time, do you know whether the lots were vacant? A. They were vacant."

The record proceeds:

"Cross-examination by Mr. Parker: Q. About the time this action was commenced, a fence was built around these lots, was there not, Mr. Congdon? A. Yes, sir. Q. Who built that fence? A. I had it built. In building it I was acting in employ of Chester A. Congdon. Q. Prior to that time—I mean prior to the time you had the fence built—who was in the possession of the lots? A. I suppose Mr. Kraus claimed to be the owner of it. I presume that he was in possession of it. Q. How did you get possession of it? A. By building a fence and putting a man in charge of it, and commencing this action, I suppose, was part of the possession. Q. You built the fence against the objection of Mr. Kraus, did you not, or had it done? A. Yes, sir. Q. He was in possession of the property, and forbid you entering upon the land and building the fence at the time, did he not? A. I was not there at all. I just simply sent a man there, and what conversation Mr. Kraus had with the man I have no knowledge of.

"Redirect examination by Mr. Preble: Q. As a matter of fact, prior to the time that the fence you have referred to around these lots was constructed, there was no fence around them, no structure on them, and no one in the apparent possession of them, was there? A. No."

The county treasurer of Yakima county then testified, in substance, that lot 1 of block 231 was sold by the treasurer of the county on the 18th day of May, 1901, to C. F. Kraus for $68.01, in pursuance of the judgment of foreclosure entered in the suit brought by Kraus, and that subsequent to that sale to him Kraus had paid the taxes upon that lot as follows:

"For the year 1901, the amount of $4.86 was paid by Charles F. Kraus February 8, 1902, receipt No. 159. For the year 1902 the amount paid was $4.66, paid by Charles F. Kraus February 5, 1903, receipt No. 54. For the year 1903, $5.28 was paid by Charles F. Kraus February 2, 1904, receipt No. 32. For the year 1904 the amount was $15.63, paid by Charles Kraus February 28, 1905, receipt No. 837. For the year 1905 the amount was $17.06, paid by Charles Kraus February 5, 1906, receipt No. 15," which amounts included "all sums paid upon said lots in the way of taxes, penalties, interest, and costs or otherwise, according to the books in the treasurer's office by said Charles F. Kraus."

The only other testimony in the case is that of Mr. Preble, whose direct testimony should be, and is, here set out in full:

"My name is E. B. Preble. I reside, and for about nine years last past, have continuously resided at North Yakima, in Yakima county, state of Washington. I am, and for several years last past have been, personally acquainted with the complainant Chester A. Congdon. I am, and since the commencement of this action have been, the solicitor in the said suit of and for the said complainants, Chester A. Congdon, and Clara B. Congdon. I have also acted, since a time prior to the beginning of this suit and to the filing of the bill therein, as the agent or attorney in fact of the said Chester A. Congdon, in respect to lots 1, 2, and 3 in block 231 of and in the city of North Yakima,

Digitized by Google

in Yakima county, state of Washington, according to the official plat and survey thereof of record in the office of the county auditor for said county. I was so authorized by said Chester A. Congdon some time prior to the middle of February, 1906, some time about the last of January, to act for and in his behalf in respect of the said lots, and I was then instructed by him, as his agent, to take physical and tangible possession of the said lots in his behalf, and I then undertook said employment in his behalf and entered upon the same. Prior to that time—that is, up to and prior to the time that I was so employed by Mr. Congdon, and up to the time that I did, as I propose to hereafter testify, take physical and tangible possession of said lots—the said lots were, and for a long time, and so far as I have known the same, had been, vacant and unoccupied and uninclosed and without fencing, structures, or residence or inhabitance thereon, in short, were vacant and unoccupied at the time that I took physical possession thereof, and for a long time prior thereto had been vacant and unoccupied.

"In pursuance of my employment, and acting for and in behalf of Mr. Congdon as aforesaid, in the month of February, 1906, in behalf of Mr. Chester A. Congdon, I entered upon said lots, the same being one tract of land lying contiguous to each other, the same being, at the time of my entry, vacant and unoccupied and uninclosed; and I forthwith, upon said entry, in conjunction with Albert S. Congdon, caused to be constructed a substantial post and board fence, entirely around and inclosing the said lots, excepting, as I remember now, the east side of the tract consisting of said lots had a fence that served as a partition of these lots and the adjacent tract of land on the east (the fence that I built connected with this line fence, and was supposed to be on the line), and together with it, surrounded the lots; that is to say, I built a fence on the three sides of the lots connecting with a fence that was already existing at or near the east boundary of said lots and separating them from the adjoining tracts. I also, immediately upon my entry, in behalf of Mr. Congdon, caused to be put upon the said tract of land comprising said lots a residence, consisting of a tent erected upon board floors, and caused an employé of Mr. Congdon, employed by me, to immediately go thereon and to reside in the said tent, and at the time this action was commenced, which was on February 17, 1906, and at the time this bill of complaint herein was filed, which was on the date last aforesaid, Mr. Congdon was in the actual, physical possession of the said lots, and all thereof, in the manner aforesaid, said fence then being around the said lots, and said tenant of Mr. Congdon, or employé of him through me, being then living upon the said lot in said tent, and ever since that date—that is, ever since the commencement of this action, and ever since a time prior to the said action, when the said fence was built, and when the said tent was built and the same employé, or tenant as the case might be, moved into said tent—there has been residing upon the said lots, at all times, continuously, some one living in a structure or tent upon said lot, and residing there by the consent of myself, and put thereon by me, acting for and in behalf of Mr. Chester A. Congdon; and I may add that the possession of Mr. Congdon, through me, acting conjointly in part with Albert S. Congdon, has been an exclusive possession and dominion over said lots; that, acting as Mr. Congdon's agent and in pursuance of his instructions, I have frequently, and from time to time since the construction of said fence, and since a time prior to the beginning of this action, been upon said lots, and exercised a general supervision over them for Mr. Congdon. I may say that the people who have resided upon said lots by my permission were different people, but that the residence of one always was immediately succeeded by the residence of another; that in some instances these people were employés of me, acting as the agent of Mr. Congdon; that in other instances they were tenants at will of Mr. Congdon on the property. I may also add that, in addition to the acts of residence upon said property by the consent and by arrangement with Mr. Congdon, acting through me, a Mr. Ludlow, acting in behalf of some religious denomination, was by me permitted to pitch a large tent upon a part of said tract, and to occupy the same, together with the religious congregation, for the holding of divine services.

"I am acquainted with Charles F. Kraus, with Ethel Kraus, and with Ada Maud Kraus, the defendants in this suit. I have been quite familiarly ac-

Digitized by Google

quainted with Charles F. Kraus for a number of years, from five to seven, or longer. I don't know exactly how many; I have seen and met the wife of Charles F. Kraus, Mrs. Ethel Kraus, and I also have some slight acquaintance with Ada Maud Kraus and have known of her, and known her as Mr. Kraus' daughter, for a number of years, just how long I don't know. She is a young girl, about 15 years old. I think her mother told me that was her age. About a short time before this action was commenced, in February, shortly prior to the commencement of this action—I won't say whether it was on the same day or just a little prior thereto—acting for Mr. C. A. Congdon and in his behalf, I called at the house of Charles F. Kraus where he resided, together with his wife, Ethel Kraus, and his daughter, Ada Maud Kraus, I there met Mrs. Ethel Kraus and Ada Maud Kraus, two of the defendants in this suit. I called for the purpose of tendering to Ada Maud Kraus the moneys that have been paid for the taxes, penalties, interest, and costs upon lot 1 in block 231, and I informed Mrs. Kraus, and also Ada Maud Kraus, that that was my business there. I explained to Ada Maud Kraus (I think her mother was present all or nearly all the time, perhaps not all the time), in detail my business, told her that I was the agent of Chester A. Congdon, and told her that he, Chester A. Congdon, claimed to be the owner of said lot 1 in block 231; called her attention to the fact that it appeared that her father, Charles F. Kraus, had purchased said lot at a tax sale thereof, and called her attention to a further fact that it appeared from the records that her father and mother had, after said tax sale, conveyed the said lot to her, Ada Maud Kraus. I told her that it appeared from the tax records that the aggregate sum paid by her father at the tax sale for the said lot 1, and the taxes subsequently paid by him up to the date of my talk with her, together with all penalties and interest on said sums, amounted, as I figured it, to $140.15. I think I told her that, in fact, it was a little less than that, but that I wanted to be sure to tender her enough to cover said sums. I then produced to her gold coin amounting to $140 and 15 cents in fractional currency. I exhibited this money to her, counted it to her, and without reservation offered to turn it over to her for the purposes aforesaid. She declined to receive it, and did not receive it. I then told her that I had been instructed to commence a suit by Mr. Congdon to establish his title to said lot, together with the other lots, and that I would pay the money that I had just tendered her to the clerk of the Circuit Court of the United States for the Eastern District of Washington, and that she could get it, any time she wanted it, at said clerk's office; and immediately after the tender, or very soon after the tender, I did in fact pay to Mr. Lee C. Delle, who was then and now the deputy clerk of said court for the Southern division, the said $140.15, and paid it to him for Ada Maud Kraus, and instructed him, upon her request or upon the request of any one legally acting in her behalf, to pay the money to her, and the money, as I am informed by the said clerk, Mr. Delle, was kept by him for that purpose, at any rate I know he received it from my hands for that purpose.

"As I stated before, I have been acquainted with the defendant Charles F. Kraus, the father of Ada Maud Kraus, and the husband of the defendant, Ethel Kraus, intimately, for a number of years, and Mr. Kraus and his family, including his said wife and his said daughter, at the time of the commencement of this action, being February 17, 1906, were residing at North Yakima, in Yakima county, state of Washington, and were inhabitants of the Eastern district of the state of Washington—that is, the Eastern judicial district, I mean, of the state of Washington—and Mr. Kraus and his said wife, family, and daughter, for years prior to the commencement of this action, and prior to the date last aforesaid, had continuously resided at said North Yakima, and were inhabitants of the territory comprised in said Eastern judicial district of the state of Washington. I may say that the said $140.15 includes all sums paid by Charles F. Kraus at the tax sale for said lot, and all sums paid subsequently to the said tax sale by him upon said lot 1, and also interest at the legal rate, computed upon said respective sums from the time of said respective payments to the commencement of this action, February 17, 1906, said amounts, upon which the interest was computed, and aggregating the said sum of $140.15, being the sums given by the treasurer, who was a witness in this cause."

Digitized by Google

On cross-examination Mr. Preble was questioned, and answered as follows:

"Q. Now, you knew at the time you entered upon this land, as you say, in behalf of Mr. Congdon, that she (Ada Maud Kraus) claimed to be the owner of lot 1, did you not? A. Yes, I understood at any rate that she claimed to own that lot. * * * Q. Now, how long did it take you or your employé to build the fence? A. I am unable to say exactly. I presume that from the time I commenced operations of getting the lumber, the posts, and the boards, down there, and hiring the men and getting it all done, the whole thing may have covered a day or two, or, perhaps, three days. Q. How long was it after the posts and lumber were actually on the ground that the fence was built and the tent up? A. I think that the fence was actually up the same day that the lumber was actually on the ground, though I would not swear absolutely positive to that. Q. Then you hired a man to go there and live in the tent in order to hold the semblance of possession of this land? A. No, sir; not the semblance of possession. I employed a man, when the fence was first up, to live there and maintain actual physical possession, and subsequent to that time, I leased it to various persons. * * * Q. Did all these people occupy this lot 1, or were they on another lot? A. They occupied indiscriminately the entire tract. In my contracts with them I gave them the right to occupy, and charged them with the duty of occupancy of the entire tract that was inclosed with that fence. Q. They were there, as a matter of fact, for the purpose of maintaining possession of the land? A. They were there for the purpose of maintaining a physical and tangible possession of said property; and, as Mr. Congdon had instructed me to exercise a dominion over it, his instructions to me were to take the physical possession of that property for him, he claiming to be the owner thereof, to exercise a general supervision over the property in his behalf, to care for it for him, and to keep off intruders, and that was what I was trying to do, and did."

The foregoing embodies the entire substance of the testimony and evidence in respect to the merits as between the complainants and the minor defendant, who is one of the appellants from the decree of the court below quieting the complainants' alleged title to all three of the lots as against all three of the defendants to the suit.

I think it clear that the decree is erroneous in so far as concerns lot 1. In the proof introduced by the complainants on the merits there is not a particle of evidence of any kind or character even tending to show any title in the complainants to the lot covered by the deed to the minor defendant, and under which, according to Preble's own testimony, she claimed title to that lot at the time when (one day only before he instituted the suit) he intruded into its possession to build a fence, which, connecting with a fence already on the lot, effected its inclosure. Nowhere in the proof are the complainants in any manner connected with the title of the original owner or owners of either of the lots in question. Assuming that the tax proceedings alleged in the bill and introduced in evidence were ineffectual to divest the title of the true owner, they, and the deed from Kraus and his wife to the minor defendant, undoubtedly constituted color of title under which the latter claimed and held lot 1 at the time of Preble's unlawful entry upon it in behalf of the complainant Congdon.

It is true that a statute of the state of Washington, as do statutes of many other states, authorizes any person in possession of real property to bring an action against any person or persons claiming an interest in such property, or any part thereof, or any right thereto, adverse to him, for the purpose of determining such adverse claim,

Digitized by Google

estate, or interest. Section 5521, Ballinger's Ann. Codes & St. Wash. (Pierce's Code, § 1156). But can such an action be maintained in a court of equity upon possession only, where the complainants' own proof shows that such possession was obtained and is held by him as a mere naked trespasser? I think not. I am aware that it was held by the Supreme Court of Nevada, in the case of Scorpion S. M. Co. v. Marsano, 10 Nev. 370, founded upon a similar statute of that state, that the mode of acquiring possession is of no consequence, and that such an action can be maintained upon bare possession, even when the possession was obtained by force; and that in Calderwood v. Brooks, 45 Cal. 519, it was held that a possession obtained by collusion was sufficient to sustain such an action, based upon a similar statute of California. But to the contrary, it was adjudged by the Supreme Court of the United States in the case of Stark v. Starr, 6 Wall. 402, 18 L. Ed. 925, which was a suit in equity, founded upon a similar statute of Oregon, that the possession which will support such a suit "must be accompanied with a claim of right—that is, must be founded upon the title, legal or equitable—and such claim or title must be exhibited with the proofs." To the same effect is King v. French, 2 Sawy. 441, Fed. Cas. No. 7,793, and Tichenor v. Knapp, 6 Or. 205. It is difficult to see how it can be otherwise, for it is surely contrary to the very first principles upon which courts of equity proceed to establish, by a decree of a court of equity, right and title to real property in one whose sole claim thereto rests upon its possession obtained by fraud, collusion, or other wrong.

It is true that the federal courts are bound to enforce rights based upon a state statute in accordance with that law as determined by the highest court of such state; and if the Supreme Court of the state of Washington had decided that a suit to quiet title to real property, founded upon the statute here in question, can be maintained where the complainants' sole claim thereto rests upon possession obtained by an unlawful trespass, fraud, collusion, or other wrong, I should feel obliged to follow it in respect to real property situated within that state; but I do not find any such decision. It is true that in the case of Bird v. Winyer, 24 Wash. 269, 64 Pac. 178, the Supreme Court of the state cited section 5521 of Ballinger's Ann. Codes & St. reading: "Any person in possession * * * of real property * * * may maintain a civil action against any person or persons * * * claiming an interest in such real property or any part thereof or any right thereto adverse to him * * * for the purpose of determining such claim, estate or interest," etc., and said:

"This section, it would seem, needs no argument in support of its construction. There is no requirement here that the plaintiff must have or claim to have title, as in some other states. Under the common-law action to remove clouds, the plaintiff must be in possession, and must have been disturbed in his possession, and he must have established his right by successive judgments in his favor. Allen's Equity, p. 202; Pom. Eq. Juris. § 248; Bispham Eq. (5th Ed.) § 568. The section above quoted, for obvious reasons, has done away with the provisions of the common law, and also in common statutes in other states in the Union has obviated the necessity of alleging and proving title. Any person in possession may maintain the action for the purpose

Digitized by Google

of quieting his own or his adversary's claim thereto, so as to avoid any uncertainty in his holding."

The rule is thoroughly established that the language of a court must be taken and construed in connection with the facts about which the court is speaking. In the case of Bird v. Winyer there was nothing tending to show that the plaintiff acquired the possession of the property there in question by any unlawful or wrongful means; but, on the contrary, the proofs there showed that the plaintiff, who was an Indian, located upon and thereafter continuously possessed and improved the land in question under the terms of a treaty between the United States and the Indian tribe of which he was a member, and under and in pursuance of an allotment made to him of the land under and pursuant to the treaty.

In the later case of Shelton Logging Co. v. Gosser, 26 Wash. 126, 66 Pac. 151, the Supreme Court of Washington distinctly adjudged that, in order for a person successfully to invoke the interposition of equity under the provisions of section 5521 of Ballinger's Ann. Codes & St:

"Two things must be established: (1) The validity of his own title in law or equity; (2) the invalidity of his opponent's. The first inquiry, then, is, has the appellant established any title?" 26 Wash., page 130, 66 Pac., page 153.

In that case the appellant was in the actual possession of the land at the time of commencing the suit, and its proof also showed the basis of its claim of title thereto. The court decided against the validity of that title, saying in its opinion, page 132 of 26 Wash., page 153 of 66 Pac.:

"We understand the rule to be that, in the absence of any showing to the contrary, possession, as a matter of evidence prima facie, establishes title. Horn v. Jones, 28 Cal. 195; McGovern v. Mowry, 91 Cal. 383, 27 Pac. 746; Steele v. Fish, 2 Minn. 153 (Gil. 129); Wilder v. St. Paul, 12 Minn. 192 (Gil. 116). When, however, it is shown, in addition to possession, what the title is under which such possession is claimed, the court is then required to pass upon the question as to whether or not the one so claiming has title, and incidentally as to the lawfulness of his possession. The title claimed by the plaintiff is through a contract with the state. Under it we have held that the appellant had no title to the land within the calls of lot 2. His possession then becomes immaterial as evidence of title. It may be that all the appellant was required to do in order to make out a prima facie case was to establish possession. Here, however, the appellant has gone further than the mere allegation of possession. It has deraigned its title by apt averments, and relies on possession by virtue of the ownership of such title; and from these averments the court is able to determine that it is a mere trespasser on tide land within lot 2, as it has no title to the same. Appellant's title having failed, it is unnecessary to inquire whether or not the respondents had title to any portion, and, if so, what, within the meander lines of said lot 2."

It seems clear to me that the decision of the Supreme Court of Washington last cited is in accord with the decision of the Supreme Court of the United States in Stark v. Starr, supra, and with the view I have taken of the present case. I am also of opinion that the decree appealed from is erroneous as respects the appellants Charles F. Kraus and Ethel Kraus, for the reason that the demurrer to the bill should have been sustained. While it is true that in one part of the bill it is alleged that the judgment, entered in the suit brought by

Digitized by Google

Charles F. Kraus against W. N. Pratt to foreclose the tax liens, and all proceedings thereunder, were void and of no effect, it also expressly alleges the validity of the tax assessments against all three of the lots, the validity of a lien on each of them for such taxes, the due issuance of a certificate of delinquency, under and pursuant to the statutes of the state, covering each of the lots, by virtue of which the county treasurer duly sold at public auction each of the lots to Charles F. Kraus, and thereupon issued to him, pursuant to the provisions of the tax laws of the state, a tax deed, whereby and by the terms of which the county treasurer "granted and conveyed unto said Charles F. Kraus, his heirs and assigns," the lots in question, and that Kraus and his wife subsequently "conveyed" lot 1 to their daughter, Ada Maud Kraus.

The averments of a bill of complaint should be clear, certain, and consistent, and the rule is universal that a pleading is to be taken most strongly against the pleader. While the intention of the pleader in this case may be guessed at, I do not think that a bill, which in one part alleges that certain specified tax proceedings resulted in the conveyance of the title to the property to the purchaser under those proceedings, and in another part alleges that the proceedings were void and of no effect, should be sustained as against a demurrer challenging its sufficiency.

Accordingly, I think the judgment should be reversed, and the case remanded to the court below, with instructions to enter judgment in favor of the defendant, Ada Maud Kraus, as respects lot 1 of block 231, and, as respects the remaining lots in controversy, to sustain the demurrer to the bill, with leave to the complainants to amend.

(161 Fed. 30.)

FEIDLER et al. v. BARTLESON.

(Circuit Court of Appeals, Ninth Circuit. February 3, 1908.)

No. 1,439.

1. COURTS—FEDERAL COURTS—CREDITORS' SUIT—JURISDICTION.
   A creditor's bill may be maintained in a federal Circuit Court to enforce a domestic judgment of the state court.

2. SAME.
   The fact that complainant submitted himself to the jurisdiction of a state court when he recovered a judgment against F., and that the jurisdiction of such court was sufficiently broad to afford complainant all the relief prayed for in a creditors' suit, did not deprive him of the right to institute such suit in the federal courts against defendants who were not parties to the action in the state court.

3. SAME.
   Where complainant sought to enforce a judgment against F. out of the proceeds of an alleged partnership in the hands of the administratrix of the deceased partner, the fact that the judgment was recovered in the superior court of King county, Wash., on the probate side of which the administration of the estate of the deceased partner was pending, did not require prosecution of the creditor's bill in that court, the equity and probate jurisdiction of which is separate and distinct, complainant not being able to procure appropriate relief in the probate proceedings.

Digitized by Google

4. CREDITORS' SUIT—OTHER REMEDY.

A judgment creditor was entitled to enforce his judgment by an original bill in equity, notwithstanding he might have obtained relief at law by garnishment proceedings.

[Ed. Note.—For cases in point, see Cent. Dig. vol. 4, Creditors' Suit, § 6.]

5. COURTS—FEDERAL COURTS—JURISDICTION—CITIZENSHIP.

Where a creditor's bill in a federal court to enforce a state judgment sought to establish the existence of a partnership only for the purpose of subjecting the interest of the surviving partner in the partnership funds to the payment of complainant's judgment, the bill was not demurrable on the ground that complainant sought thereby to compel defendants, who were both residents of the state, to litigate in the Circuit Court a demand which one had against the other.

[Ed. Note.—Diverse citizenship as a ground of federal jurisdiction, see note to Shipp v. Williams, 10 C. C. A. 249; Mason v. Dullagham, 27 C. C. A. 298.]

6. APPEAL AND ERROR—PLEADINGS—PREJUDICE.

Where matter constituting no defense to the bill was excepted to, and the court overruled the exceptions, but announced that the matter pleaded would be wholly disregarded on final hearing, and that any expense added to the proceedings by reason thereof would be taxed to the defendants, the appellants were not prejudiced thereby.

7. CREDITORS' SUIT—ANSWER—SUFFICIENCY—CONSPIRACY—FRAUD.

Where a creditor's bill sought to compel payment of a judgment against an alleged surviving partner out of the assets of a firm in the possession of the administratrix of the deceased partner, allegations that the judgment had been obtained by complainant against such surviving partner, based on various accounts which had been assigned to complainant by parties doing business in the eastern states, and that such surviving partner had entered into a conspiracy with complainant and others to defraud the estate of the deceased partner, and that he had no interest in the suit, but was permitting his name to be used in furtherance of the conspiracy; that complainant was not the real party in interest and that the accounts on which the judgment was based were barred by limitations, were insufficient to show either a conspiracy or fraud sufficient to invalidate the judgment.

8. ASSIGNMENTS—VALIDITY—ASSIGNMENTS FOR COLLECTION.

An assignment of claims to complainant for collection may be lawfully made under the statutes of Washington.

[Ed. Note.—For cases in point, see Cent. Dig. vol. 4, Assignments, § 126.]

9. CREDITORS' SUIT—VALIDITY OF JUDGMENT—CLAIMS.

Where various claims against a surviving partner were assigned to complainant and merged in a judgment valid on its face and unimpeachable for fraud, complainant's right to enforce payment of the judgment was as unimpeachable as if the judgment had been based on a valid debt originally payable to him.

10. SAME.

The rule that whenever a judgment is sought to be enforced to the detriment of a third person, he may avoid its effect by showing that the party to the former action colluded and procured the judgment to defraud him, has no application where the judgment creditor is seeking to compel payment out of funds equitably belonging to the judgment debtor.

11. JUDGMENT—FOREIGN JUDGMENT—ANCILLARY ADMINISTRATION—JUDGMENT—CONCLUSIVENESS.

A decree in ancillary administration proceedings in the United States Commissioners' Court at Nome that no partnership existed between decedent and a judgment debtor was not conclusive against complainant's right to pursue assets in the hands of distributees of such decedent within

Digitized by Google

the jurisdiction of the federal Circuit Court for the District of Washington by a creditor's bill filed in such court, on the ground that a partnership in fact existed.

12. APPEAL AND ERROR—EVIDENCE—ADMISSION.

Where, after the admission of certain objectionable testimony before an examiner, the competency of similar testimony was submitted to the court who ruled that it was incompetent, and no further testimony of that nature was received, it would be presumed on appeal that the testimony already introduced was disregarded by the court, and therefore constituted no ground for reversal.

[Ed. Note.—For cases in point, see Cent. Dig. vol. 3, Appeal and Error, § 3766.]

13. PARTNERSHIP—FINDINGS—EVIDENCE.

Evidence *held* to sustain a finding that a partnership existed between a judgment debtor and his deceased brother.

[Ed. Note.—For cases in point, see Cent. Dig. vol. 38, Partnership, §§ 75–80.]

Appeal from Circuit Court of the United States for the Northern Division of the Western District of Washington.

For opinion below, see 149 Fed. 299.

The appellee brought a suit in equity in the nature of a creditor's bill to enforce the payment of a judgment which he had obtained on June 25, 1904, in the superior court of King county, Wash., against F. J. Feidler for the sum of $2,881.75 and costs, upon which judgment execution had been issued, and returned nulla bona. The suit was brought against F. J. Feidler and Edith M. Feidler, as administratrix of the estate of Ed. L. Feidler, deceased. The bill alleged that F. J. Feidler and Ed. L. Feidler were brothers and partners in a business conducted at Nome and other points in Alaska, under the name of the Progreso Trading Company, which partnership was entered into in May, 1900, and continued during the years 1901, 1902, and 1903; that, by the partnership agreement, each partner contributed an equal sum to the copartnership fund, and that after 1901 Ed. L. Feidler personally conducted the business in Alaska, while F. J. Feidler remained at Seattle to purchase goods and ship the same to Nome and other Alaskan ports; that Ed. L. Feidler died at Nome on October 19, 1903, and at that time the amount of assets in the copartnership was $29,150, subject to the payment of the debts of the copartnership, amounting in the aggregate to $10,000; that on November 28, 1903, Edith M. Feidler was appointed administratrix of the estate of Ed. L. Feidler, deceased, in the superior court of King county, Wash., and on May 19, 1904, she caused to be filed in that court an inventory and appraisement of the estate of Ed. L. Feidler, in which the assets were valued at more than $29,000; that the appraisers of the estate, without warrant or authority of law, attempted to adjudicate the interests of F. J. Feidler, and reported to the court that he had no interest in the business of the Progreso Trading Company, and was not a partner therein during the year 1903, and that Edith M. Feidler, if permitted to administer the estate, intended to distribute the same in disregard of any interest or claim of F. J. Feidler, and to the injury of the appellee; that F. J. Feidler had no property other than his interest in the assets of said partnership, then in the hands of said administratrix. Edith M. Feidler, administratrix, interposed a demurrer to the bill for want of equity, and also for want of jurisdiction, in that it was sought to enforce a domestic judgment of the superior court of King county, and to litigate in a federal court a demand which the complainant in the bill claimed that his judgment debtor, a resident of the state of Washington, had against said Edith M. Feidler, who was also a resident of that state. The demurrer was overruled, and thereupon the said administratrix filed her answer, admitting certain of the allegations of the bill, but denying that F. J. Feidler was ever a partner with Ed. L. Feidler, or had any interest in the Progreso Trading Company. Further answering, she set up as affirmative defenses: First, that as the duly ap-

Digitized by Google

pointed, qualified, and acting administratrix of said estate she had published notice to creditors to present their claims within one year from December 19, 1903; that F. J. Feidler had presented no claim against the estate within a year thereafter, wherefore the claim was barred under the provisions of the statutes of the state of Washington. Second, that on October 20, 1903, C. G. Cowden was appointed administrator of the estate of Ed. L. Feidler at Nome, and on April 16, 1904, he made his first report and filed the same in the United States Commissioner's Court for the District of Alaska, in the Nome precinct, in which he inventoried the assets of the Progreso Trading Company as the property of Ed. L. Feidler, deceased, and on June 5, 1904, made a second report in which the property was again inventoried as the property of Ed. L. Feidler, deceased, and all claims against the Progreso Trading Company were scheduled and allowed as claims against Ed. L. Feidler; that on July 11, 1904, the said Cowden made his final report to the United States Commissioner's Court at Nome, whereupon notice of final settlement was made and published according to law, and on September 15, 1904, said final report was approved, and the estate of Ed. L. Feidler was ordered to be distributed, one-half to his widow, Edith M. Feidler, and the remaining one-half to his two minor children; that at said final settlement there remained in the hands of said Cowden, after payment of all debts, costs, and allowances, the sum of $7,181.72, which was thereupon transmitted by the said Cowden to Edith M. Feidler at Seattle; that F. J. Feidler never at any time presented any claim to the administrator, Cowden, to any part of the assets of the Progreso Trading Company. Third, that F. J. Feidler never at any time presented to said administratrix any claim under oath, as required by law, against the estate of Ed. L. Feidler, deceased, or any claim to any interest in the assets of the Progreso Trading Company; that he did, however, some time after the death of Ed. L. Feidler, notify said administratrix, both orally and in writing, that he claimed to be a partner of Ed. L. Feidler, and requested that he be recognized as such; that she notified him that she had never before heard of such a claim, and that she had always understood that Ed. L. Feidler was the sole owner of the Progreso Trading Company, and she requested said F. J. Feidler to present some evidence of the partnership other than his naked statement, and was informed by him that there was no agreement, and that there was no writing of any kind or description and no reference either by letter or otherwise to any such partnership; that the three commissioners appointed by the superior court of King county to appraise the estate of Ed. L. Feidler fully investigated the alleged claim of F. J. Feidler, and in their inventory and appraisement reported that they failed to find any evidence to support his claim; that F. J. Feidler was authorized by Ed. L. Feidler, prior to his death, to sign the name of the latter to checks, and that F. J. Feidler, immediately upon learning of the death of his said brother, took from the Puget Sound National Bank, the sum of $1,500, and collected other amounts belonging to Ed. L. Feidler, aggregating between $2,300 and $5,000, all of which he illegally appropriated to his own use. The answer admitted that, in the year 1900, both Ed. L. Feidler and F. J. Feidler shipped a quantity of supplies to Nome and Teller City, Alaska, and both accompanied said shipment and were partners in that venture; that after that year Ed. L. Feidler was in business for himself and alone, under the name of the Progreso Trading Company; that during the years 1901, 1902, and 1903, Ed. L. Feidler sent checks and other cash securities from Nome to F. J. Feidler in Seattle, with instructions to deposit the same and to pay out certain amounts on designated claims; that he also sent orders for goods to F. J. Feidler; that, otherwise, F. J. Feidler had no connection whatever with the Progreso Trading Company, and that Ed. L. Feidler usually, upon his return from Alaska in the fall, paid said F. J. Feidler for such services. Upon the filing of this answer the appellee filed an amended bill of complaint for the purpose of responding to the matters set up in the answer, and also to bring in as additional parties the two minor children of Ed. L. Feidler. In the amended bill, in addition to the matter set up in the original bill, the appellee alleged that said Cowden, the administrator at Nome, in disregard of the rights of F. J. Feidler, inventoried the property of the Progreso Trading Company as belonging to Ed. L. Feidler; that F. J. Feidler presented to the administratrix a written statement that he was part-

Digitized by Google

ner with Ed. L. Feidler, whereupon she made a pretended investigation of the claim, and after such investigation reported that she was without evidence sufficient to convince her that he was such partner; that thereafter F. J. Feidler employed attorneys to represent him, and said attorneys entered into an agreement with the attorney of the administratrix, by which the latter was to proceed to Nome, have the administration there closed, and the assets of the estate transmitted to the administratrix, after which said F. J. Feidler was to have a reasonable time to establish by such legal proceedings as his counsel should deem proper and necessary his interest and ownership in such assets; that said attorney for the administratrix, in violation of such agreement, procured the filing of said reports by Cowden and the distribution of the funds of the estate to Edith M. Feidler individually and to herself as guardian of her minor children; that the entire proceedings in the Commissioner's Court at Nome were illegal and of no binding force and effect upon F. J. Feidler and his claim to an interest in the assets, and that that court was without jurisdiction.

The trial court, upon the proofs upon the final hearing, found that F. J. Feidler was a partner with Ed. L. Feidler, deceased, and decreed that the appellee's judgment be paid out of his share of the partnership assets.

Bo Sweeney and G. E. Steiner, for appellants.

James A. Snoddy, for appellee.

Before GILBERT, ROSS, and MORROW, Circuit Judges.

GILBERT, Circuit Judge (after stating the facts as above). It is contended that the demurrer to the original bill should have been sustained for want of jurisdiction and for want of equity. It is said that there was want of jurisdiction in the fact that the appellee sought by his bill to enforce in the Circuit Court a domestic judgment of a state court. But that such a judgment may be the basis of a creditor's bill in the federal court is well sustained by the authorities. First National Bank of Chicago v. Steinway et al. (C. C.) 77 Fed. 661; Alkire Grocery Co. v. Richesin (C. C.) 91 Fed. 79; Bidwell v. Huff (C. C.) 103 Fed. 376; National Tube Works v. Ballou, 146 U. S. 517, 13 Sup. Ct. 165, 36 L. Ed. 1070. Further challenge to the jurisdiction is presented in the argument that because the appellee submitted himself to the jurisdiction of the state court when he brought his action against F. J. Feidler, and because the jurisdiction of that court was broad enough to afford him all relief which he here seeks, he had no right to invoke the aid of the court below against the appellants, who were not parties to the action in the state court. We find no merit in this. The appellants had no interest in the matter in controversy in the state court, and could not have been made parties thereto. The judgment in that action established the debt of F. J. Feidler to the appellee. It remained to the appellee to enforce its payment by any proper proceeding. The amount involved and the citizenship of the parties being such as to give jurisdiction to the court below, he had the right to bring his suit therein. It is true that the judgment had been rendered in the superior court of King county, and that the administration of the estate of Ed. L. Feidler was conducted in that court. But the equity and probate powers of the superior courts of the state of Washington are separate and distinct, and the appellee was not bound to file his bill in that court from the mere fact that, on the probate side, the same court had jurisdiction of the estate, nor

Digitized by Google

could he have obtained appropriate relief in probate proceedings. Stewart v. Lohr, 1 Wash. St. 341, 25 Pac. 457, 22 Am. St. Rep. 150; Winston v. Crowe, 28 Wash. 65, 68 Pac. 174; In re Alfstad's Estate, 27 Wash. 175, 67 Pac. 593. Assuming, as contended by counsel for appellants, that the superior court could have granted full relief to the appellee under the provisions of the statutes of Washington relating to probate and garnishment, the appellee was not limited to those remedies. He had the right to proceed by an original bill in equity, notwithstanding that he might have enforced the payment of his judgment at law by garnishment proceedings. Payne v. Hook, 7 Wall. 425, 19 L. Ed. 260; Fiske v. Gould (C. C.) 12 Fed. 372.

It is urged, further, that the demurrer should have been sustained for the reason that the appellee sought by his bill to compel the defendants therein, who are both residents of the state of Washington, to litigate in the Circuit Court a demand which one had against the other. To this it is only necessary to say that the bill is not brought to permit or to compel the defendants therein to litigate between themselves. It is a bill to establish the existence of a partnership between Ed. L. Feidler and F. J. Feidler, only for the purpose of subjecting the interest of the latter in the partnership funds to the payment of the appellee's judgment.

The ruling of the court below on the exceptions of the appellee to the answer to the amended bill is assigned as error. The exceptions were directed against portions of the answer which set up as a defense to the bill certain allegations to the effect that the judgment obtained against F. J. Feidler by the appellee was based upon various accounts, 23 in number, which had been assigned to the appellee by parties doing business in various eastern states, that F. J. Feidler had entered into a conspiracy with the appellee and other parties to defraud and pilfer the estate of Ed. L. Feidler, deceased, that F. J. Feidler had no real interest in the suit, but was permitting his name to be used in furtherance of the conspiracy, that the appellee was not the real party in interest, and that said accounts were incurred in the year 1898, and when the action was begun in the state court, were barred by the statute of limitations. The trial court, while ruling that the matters so alleged were no defense to the suit, held that, under the rules of equity practice, exceptions could not be taken to parts of an answer save for scandal, when the complainant had waived an answer under oath, and on that ground overruled the exceptions, but announced that the matter so pleaded would be wholly disregarded upon the final hearing of the case, and that any expense added to the proceedings by reason thereof, would be taxed to the defendants in the bill. The appellants were clearly not prejudiced by this ruling. The matters so excepted to in the answer constituted no defense to the bill. The appellants have no concern with the defense which F. J. Feidler might have interposed to the action at law. He was not bound on their behalf or on his own, to plead the statute of limitations. The facts so set forth in the answer fall far short of showing a conspiracy or fraud such as to invalidate the judgment. An assignment of claims to the appellee for the purpose of collection, could lawfully be made under the statutes of the state of Washington. Those claims being merged in a judgment, valid

Digitized by Google

on its face, and unimpeachable for fraud, the judgment creditor's right to enforce its payment is as unimpeachable as it would be if the judgment had been based upon a single debt originally due and payable to him. Bowden v. Burnham, 59 Fed. 752, 8 C. C. A. 248; Alkire Grocery Co. v. Richesin (C. C.) 91 Fed. 79. The appellants cite authorities to the proposition that whenever a judgment is sought to be used to the detriment of a third person, he may avoid its effect by showing that the parties to the former action colluded together, and thereby procured the judgment for the purpose of defrauding him, but that doctrine has no application to the present case, for here there is no showing whatever of a purpose to defraud the appellants, or to use the judgment to their detriment. What they are required to do by the final decree is to pay to the appellee herein money which in equity belonged to F. J. Feidler, and not to the appellants, money which they had no right to retain.

It is contended that the judgment on the final settlement of the estate in the Commissioner's Court at Nome is a final adjudication that Ed. L. Feidler, deceased, was the sole owner of the property of the Progreso Trading Company, and that the appellee is bound thereby. But the court at Nome was but a court of ancillary administration, and it may be doubted whether within the jurisdiction conferred upon that court, F. J. Feidler could have established his equitable interest in the property in the possession of the court. But, however this may be, the appellee was not barred by the final decree of that court from pursuing the assets in the hands of the distributees within the jurisdiction of the court below. In a similar case, Borer v. Chapman, 119 U. S. 587–599, 7 Sup. Ct. 342, 30 L. Ed. 532, the court said:

> "The administration of the estate of Gordon, in California, was merely ancillary; the primary administration was that of the testator's domicile, Minnesota. Chapman was not a citizen of California, nor resident there; he was no party to the administration proceedings; he was not bound to make himself such. If he had chosen he could have proved his claim there and obtained payment, but he had the right to await the result of the settlement of that administration, and look to such assets of Gordon as he could subsequently find in Minnesota, whether originally found there or brought there from California by the executors or legatees of Gordon's estate."

It is urged that testimony of F. J. Feidler concerning the partnership transactions between him and Ed. L. Feidler deceased, was improperly admitted in evidence. We find from the record that, while testimony was being taken before the examiner, the question of the competency of the testimony of F. J. Feidler as to his transactions with his deceased brother was certified to the court below, and that the court ruled that the witness should not be permitted to testify as to transactions with, or statements by, Ed. L. Feidler. Prior to that ruling, some testimony had been given by F. J. Feidler as to such transactions or statements, but thereafter none such was taken. We assume, of course, from the ruling of the court below, that such testimony was disregarded by that court as it is disregarded in this court. Its admission, therefore, is no ground for reversal.

Upon the evidence which is found in the record, we discover no ground to disturb the conclusion of the court below upon the principal

Digitized by Google

question of the case—the question whether or not F. J. Feidler was a partner with Ed. J. Feidler at the time of the death of the latter. The evidence shows beyond dispute that in the year 1900 they went together to Nome, with a stock of merchandise, and that during that year and the following year they were both engaged as partners in business at Nome, under the name of the Progreso Trading Company. After 1901, F. J. Feidler remained at Seattle, where he occupied an office for the firm and attended to the business of the copartnership at that place, which was the point of purchase and shipment of all the goods of the firm. He received from Ed. L. Feidler remittances of large sums of money from Nome, and he purchased the goods which were shipped to Nome. There is no evidence that a dissolution of the copartnership was ever had or announced. There was testimony of admissions of Ed. L. Feidler made in the years 1902 and 1903, tending to show that at that time F. J. Feidler was his partner, and there was testimony, on the other hand, that Ed. L. Feidler, at different times subsequent to 1901, stated that he was the sole proprietor of the Progreso Trading Company, and that he was paying his brother for his services. But it is not shown that any of these statements were made in the presence of F. J. Feidler or were communicated to him. There was other evidence tending to show copartnership, notably a letter written by Edith M. Feidler to F. J. Feidler on February 18, 1904, indicating that at that time she considered him a partner. The preponderance of the evidence is in favor of the finding made by the court below.

We find no ground for reversing the decree. It is affirmed.

(161 Fed. 37.)

THE ALLIGATOR et al. THE ALLIGRIPPUS et al. THE PHŒNIX et al.

(Circuit Court of Appeals, Third Circuit. February 17, 1908.)

Nos. 34, 55, 56.

1. MARITIME LIENS—SERVICES RENDERED TO VESSEL—PRESUMPTION OF LIEN.

While there may be a maritime lien for services rendered to a vessel, either foreign or domestic, and there may be a presumption that such services were rendered on the credit of the vessel such as in case of salvage or pilotage services, whether such presumption arises, or whether the lien exists, depends on the nature of the services and the circumstances under which they are rendered.

[Ed. Note.—For cases in point, see Cent. Dig. vol. 34, Maritime Liens, § 12.]

2. TOWAGE—LIEN—WAITING UPON DREDGES.

The owner of a tug which was verbally hired by the day by the owner of three dredges to "wait upon" such dredges while engaged on certain work, the services rendered being the carrying of coal and water to the dredges, the towing of scows and of the dredges themselves when necessary is not entitled to a maritime lien on all or any of such dredges for a balance due on the contract which was not one for ordinary towage services to the vessels themselves.

[Ed. Note.—For cases in point, see Cent. Dig. vol. 45, Towage, § 9.]

Digitized by Google

3. MARITIME LIENS.

A maritime lien does not attach for a supposed credit given to a vessel unless the service or supplies are clearly shown to have been rendered or furnished to the particular vessel to which the credit is given.

[Ed. Note.—For cases in point, see Cent. Dig. vol. 34, Maritime Liens, § 13.]

4. SAME—SUIT TO ENFORCE LIEN—STATE STATUTES.

Although the admiralty courts will take judicial notice of state statutes creating liens they will not undertake to adjudicate rights thereunder in the absence of the allegations and proofs necessary to an issue and controversy in that behalf.

Appeal from the District Court of the United States for the District of New Jersey.

For opinion below, see 153 Fed. 216.

E. G. Benedict, for appellant.

Robert Carey, for appellee.

Before DALLAS, GRAY, and BUFFINGTON, Circuit Judges.

GRAY, Circuit Judge. These are appeals in three separate suits, one against each of the dredges named. The suits are identical, and it was stipulated by the prosecutors of the respective parties, that the testimony taken in one of the above cases should be used in each of the others. The libels and answers are substantially the same, and in the court below, as here, the cases were argued together. The facts, as found by the court below, are briefly as follows:

There was no written contract between the parties. The libelant owned the tug boat "Harold," which rendered the services for which claim is made in the libels. In the fall of 1904, he made a verbal contract with Thomas Potter, the owner of the dredges "Alligator," "Alligrippus," and "Phœnix," for the employment of his tug boat for general towing and waiting on the above-named dredges; the tug was to do whatever the captains of the dredges required, "such as getting coal and water, waiting on them in general, pumping scows and taking scows to them, and generally bring them away, and general work." The dredges had no motive power of their own. The price agreed upon for the services between the libelant and the owner of the dredges, was $20 per day. The libelant claims that the services rendered by him under the above-named contract, amounted in all to the sum of $5,370, of which sum there still remains due a balance of $2,820; that of said sum of $5,370, there was due from the "Alligator," for services rendered her $3,080, of which sum there has been paid on account $1,275, leaving $1,805 due; that from the "Alligrippus," there was due for like services rendered her, $2,060, of which $1,275 had been paid on account, leaving $785 due; and that from the "Phœnix," there was $230 due for like services. Payments on account were made by checks and notes, by Potter, to the order of the libelant. The payments were general, and without reference to the services rendered to any particular dredge, but they seem to have been arbitrarily applied by libelant, in the manner above stated.

The evidence on behalf of the libelant shows that the dates when the tug was engaged in the services of the dredges, were put down by

Digitized by Google

its captain in a book, which is said to have been subsequently stolen from the tug, and that reports had been made by the captain from this book, monthly or semimonthly, which original reports had been destroyed. Certain statements, however, testified to have been copies from them, were produced, and have been offered in evidence. They are nearly all in the general form of "Report of Tug 'Harold'" for a certain month, "Account Thomas Potter, waiting on dredges 'Alligator' and 'Alligrippus' at Ellis Island," followed by a short statement of services performed each day of the month, in carrying stores, water, and coal to the dredges, or towing dredges or scows, footing up a certain number of days. No specification for the services performed for each dredge is made. It was evident the account was afterward made out by multiplying the whole number of days in which the tug was engaged, by $20, and afterwards dividing the aggregate sum thus obtained into the portions charged arbitrarily against each of the three dredges respectively. The same arbitrary appropriation was apparently made of the partial payments by the owner of the dredges. Upon this showing, the libelant claims maritime liens upon the three dredges respectively, for portions of the balance due under his contract with the owner thereof.

It may be conceded at once that the dredges are to be considered in admiralty as "vessels," and as such, subject to the general maritime jurisdiction, and that the contract between the owner of the tug and the owner of the said dredges was a maritime contract. No claim is made, however, for the existence of a maritime lien against them, on the ground that they were other than domestic vessels. On the contrary, the learned counsel for the libelant contends, that the service was, so to speak, a technical towage service, and a necessary service, as rendered to vessels having no motive power of their own, and being clearly a maritime service, that there is, under the circumstances, a presumption that it was rendered on the credit of the vessels, and that by the admiralty law a lien for the value thereof attaches, and that the burden lies on the one who disputes the lien, to overthrow such presumption by satisfactory evidence. Moreover, it is contended that this presumption of lien exists independently of any question as to the foreign or domestic character of the vessels, and that in this respect the case differs from one in which there is a claim for a lien for supplies, where the question of domestic or foreign vessel becomes important, because, in the absence of a state statute or express agreement, there is no lien against a domestic vessel for supplies. We do not propose, nor is it necessary, to deny that there may be this general line of demarcation between claims for services and claims for supplies, with respect to the presumptions of liens arising therefor, or that generally a towage service is properly classified with a pilotage service, or with that of a seaman, and others, as to which there is a prima facie presumption of lien against the res to which the service was rendered. We must not, however, press too far such distinctions. They rest upon rules peculiar to the general admiralty law, as administered in the United States. This law imposes upon a vessel, as a consequence of certain situations and conditions, when established by evidence, the peculiar lien known as a maritime lien. Owing to the underlying

Digitized by Google

necessities of commerce, and to the wandering character of its great instrument, a ship, courts of admiralty will infer, in the absence of proof to the contrary, that, where supplies necessary for the accomplishment of the ship's voyage are furnished in a foreign port on the order of the captain of a ship, or the ship's agent, and even under some circumstances by the owner, they are furnished on the credit of the ship, and a lien for their value attaches by operation of law. In other words, these facts and conditions being proved, are held ground for the reasonable presumption of credit to the ship and a consequent lien. The same presumption is held to arise as to certain maritime services rendered to a ship, independently of its character as domestic or foreign.

The lien to which the ship is thus subjected, is created, not so much for the benefit of the creditor, but for the benefit of commerce. Merchants and others are thereby encouraged to furnish supplies and render services necessary to the continuance of the ship's voyage and to the commercial enterprise of which she is the instrument. In the United States, at least, these reasons for creating a lien in the absence of express contract, in judicial contemplation, cease to exist in the home port and with reference to a domestic vessel. The presumption, or rather the burden of proof, in such cases, therefore, is shifted, and when supplies are furnished to such a vessel, the burden is upon the furnisher, to show a mutual understanding that they were furnished on the credit of the vessel. As already observed, there are maritime services which are usually rendered under circumstances which make them so essential to the movement of a vessel, and to the performance of her primary function, as an instrument of commerce, that the admiralty law presumes they are rendered on the credit of the vessel, in the absence of proof to the contrary, and creates a maritime lien in their favor, independently of the question whether it be a domestic vessel, or not. Notable examples are the lien for pilotage services, the lien for seamen's wages, for towage services and for salvage services. The reasons for the rule in these cases are obvious, and arise out of the necessities of the situation. It would be an obstruction to commerce, as well as unreasonable, if a sailor were required to show a mutual understanding between himself and the captain, that there should be a lien upon the vessel for his wages, or that the pilot who goes over the ship's side as she approaches a port, or in a dangerous channel, should be called upon to show a like mutual understanding. So in the case of salvage, much of the world's wealth would be put in jeopardy, if the salvor could only claim a lien on the property saved, by showing a mutual understanding to that effect before the service was undertaken. The peculiar exigency of the situation in all these cases, supplies the reason for the rule of presumption of lien, as it has been long recognized in the administration of the general admiralty law. The exigency for such services, as are above enumerated, so generally exist, that the rule of presumption of lien is sometimes dissociated from the reason upon which it is founded. The service of a diver can be imagined as rendered under circumstances so exigent as to come within the reason of the rule of presumption of lien, as the service may have been necessary to prevent the immediate sinking of a vessel,

Digitized by Google

but the service of the same diver in examining a sunken wreck, or the bottom of a ship lying in port, to discover whether its general condition required that the ship should be docked, would come within a different rule. So a towage service, as ordinarily performed, is a maritime service, which from the peculiar situation of the parties and of the circumstances of necessity surrounding it, and in the absence of proof to the contrary, creates a presumption of credit given to the vessel and a consequent lien. But why, where the relation of the parties and the circumstances attending the performance of the service are different from those ordinarily obtaining, should this same rule of presumption apply? If the reason ceases, why should not the law cease? In the admiralty courts of the United States, the exemption of a domestic vessel from this rule of presumption of lien, rests entirely on the supposed absence of the reasons obtaining therefor in the case of a foreign vessel. Towage service in the present case was not one rendered under the ordinary conditions to which we have just adverted. There was no question of being in a foreign port, nor was there the ordinary exigency presented when a ship is to be towed into and from a harbor, or from place to place in a harbor, as a single service. It was not, therefore, a necessary service, in the sense in which that word is used in regard to the ordinary towage service, a service to be performed instantly, in order that a ship may not be delayed on her voyage, or in preparing for the same. The tug might be said to be part of the necessary equipment of the dredge, just as the scows were part of such equipment. It supplied a continuous motive power in the peculiar work for which dredges are built. It was a contract for what may be called a quasi towage service, made with the owner of certain dredges in the waters of New York Harbor, not for a single towage of the dredges from place to place, but a service which consisted of "waiting upon" the dredges, carrying supplies of water and coal to them, as occasion required, and the towing of the scows used in the dredging operations.

The towage of the dredges themselves are the least important part of the service. The contract between the owner of the tug and the owner of the dredges, was not for a single act of towage, but for a continued service, at a compensation to be paid by the owner, at so much per diem, and that service embraced other things than mere towage, being, as we have said, largely for "waiting upon" the dredges in the way of carrying coal, water, and other supplies from the shore to the dredges. It was, therefore, a mixed service in which, so far as towage was concerned, the towage of scows, not dredges, was that principally stipulated for. The service, therefore, was as different as possible from what is ordinarily called a towage service, as to which a presumption of lien obtains. The stipulated price of $20 a day, for "waiting upon" the dredges, indicates how different the conditions were from those which are considered as justifying a presumption of lien. The charges against the separate dredges were arbitrarily made upon statements of service, not to the dredges singly and separately, but, to them as grouped. It would be an abuse of the administration of the law of maritime lien, to decree a lien for services not clearly proved to have been entirely maritime and rendered to the par-

Digitized by Google

ticular res upon which the lien is claimed. A lien does not, and should not, attach for a supposed credit given to a vessel, unless the service or supplies are clearly shown to have been rendered or furnished to the particular vessel to which the credit is given.

It only remains to advert briefly to the last point urged by the appellant, viz., that even if the court should find that appellant's contention, that there was a true maritime lien in this case, is erroneous, still, under the statute of New Jersey, there was a lien for services of the kind in question, performed within the state, which an admiralty court will enforce.

The material parts of the statute referred to are as follows:

"That whenever a debt shall be contracted by the master, owner, agent, or consignee of any ship or vessel within this state, for either of the following purposes:

* * * * * * * * * * * *

"3. On account of the towing of such ship or vessel and the wharfage of such ship or vessel, and the expenses of keeping such ship or vessel in port, including expenses incurred in taking care of and employing persons to watch such ship or vessel; such debt shall be a lien upon said ship or vessel and the tackle, apparel and furniture, and continue to be a lien on the same until paid, and shall be preferred to all other liens thereon except mariners' wages."

Appellant makes this point for the first time in this court, and admits that this statute was not called to the attention of the court below. Conceding, for the sake of the argument, that libelant had a lien under the New Jersey statute, which could have been enforced in a court of admiralty, such lien was not asserted in the pleadings, or even alluded to in the proofs. It is true that, in a certain sense, a case in admiralty is heard de novo on appeal, but it is heard on the record as made in the court of first instance.

The allegations of the libels are very meager, and are only such as go to support the assertion of a maritime lien. There is not in them a single statement that would bring the cases within the terms of the state statute. Neither the residence of the libelant, nor the place where the service was performed, is directly or indirectly alleged to be in the state of New Jersey. It may also be added that no proof was offered by the libelant as to these matters, though it would have been immaterial if he had done so. Though courts will take judicial notice of state statutes, it is hardly necessary to say that they will not undertake to make rights under such statutes justiceable before them, in the absence of the allegata and probata necessary to an issue and controversy in that behalf.

The decree of the court below is affirmed.

Digitized by Google

(161 Fed. 43.)

SCHODDE v. TWIN FALLS LAND & WATER CO.

(Circuit Court of Appeals, Ninth Circuit. February 3, 1908.)

No. 1,380.

1. WATERS AND WATER COURSES—APPROPRIATION OF WATER FROM STREAM—RIGHT TO CURRENT AS APPURTENANCE.

An appropriator of a certain quantity of water from a stream does not acquire as an appurtenant to his water location the right to the current of the stream as a means of operating devices used by him to divert the water from the stream, nor is such current subject to appropriation as a water right under the Constitution and laws of Idaho.

2. SAME—MEANS OF DIVERTING WATER—IDAHO STATUTE.

Rev. St. Idaho 1887, § 3184, which provides that owners of lands adjacent to a stream shall "have the right to place in the channel of, or on the banks or margin of, the same rams or other machines for the purpose of raising the waters thereof to a level above the banks requisite for the flow thereof to and upon such adjacent lands," gives a mere license to use an appropriate method for raising the water, but the particular method or means adopted does not attach as an appurtenance to the appropriation of the water as against other appropriators from the same stream.

3. SAME—LIMITS TO RIGHT OF APPROPRIATION.

The right to appropriate water from a stream is not an unrestricted right, but must be exercised with regard to the rights of the public and other appropriators, and a single appropriator who has adopted as a means of raising water to his land water wheels operated by the current of the stream has no right of action because of the construction of a dam below him designed for the irrigation of a large area of land, the property of many owners, which destroys the current of the stream at the place of his location, and makes it necessary for him to adopt some other means of diverting the water off his land.

In Error to the Circuit Court of the United States for the District of Idaho.

The plaintiff in error was plaintiff in the court below in an action against the defendant in error to recover damages alleged to have been sustained by the plaintiff by reason of the defendant having constructed a dam across Snake river in Idaho, so as to back the water of the river up stream to and beyond plaintiff's premises, to the injury and damage of his water right in said stream.

Plaintiff's complaint contains three counts. Briefly stated, the cause of action as set out in the three counts of the complaint is as follows: Plaintiff is the owner of three tracts of land on the banks of Snake river, containing in the aggregate 429.96 acres. Two of these tracts, containing 263.96 acres, are on the south bank, and one tract of 160 acres is on the north bank. One of the tracts on the south bank is agricultural land, and the other is partly agricultural land and partly mining ground. The tract of land on the north bank is agricultural. In the year 1889 plaintiff's predecessors in interest, and in 1895 the plaintiff himself, appropriated certain quantities of water of the flow of Snake river for use on said lands. In the first count the quantity is stated in cubic feet per second; in the second and third counts the quantities are stated in miner's inches. The aggregate of water appropriated as alleged in the three counts is referred to in the briefs as 1,250 miner's inches. Soon after this water was appropriated the parties in interest erected water wheels in the river to lift the water to a sufficient height for distribution over the land. Nine of these wheels were erected opposite or near the tracts on the south side of the river, and two near the tract on the north side of the river. These wheels vary in height from 24 to 34 feet. The parties also constructed wing dams in the river adjoining or in front of the lands owned by them, for the purpose of confining the flow of the

Digitized by Google

water of the river and raising it at such points above the natural flow of the river, so that the current would drive the water wheels and cause them to revolve and carry the water in buckets attached to the wheels to a height where it would be emptied into flumes and distributed over the lands by ditches and used thereon to irrigate and cultivate the agricultural land and work the mining ground. It is not alleged in the complaint, but it is assumed that the river at this point runs between high banks and that the water is lifted by the wheels at least 20 feet before it is emptied into the flumes for distribution over plaintiff's lands. In the year 1903, while plaintiff was using the appropriated water of the river upon the described premises, the defendant commenced the construction of a dam across Snake river at a point about nine miles westerly from and below the lands of the plaintiff. The work was prosecuted on said dam until its completion in March, 1905. This dam is so constructed as to impound all the water of Snake river flowing at said point, and to raise the water about 40 feet in height. It is alleged that when defendant's dam was filled with water the water was turned into a canal known as the "Twin Falls canal," owned by the defendant, and located on the north side of the river; that this canal was constructed at a cost, as plaintiff is informed and believes, of $1,500,000, for the purpose of supplying water for irrigation and domestic purposes to the settlers on about 300,000 acres of arable and arid lands situated below the dam; that for said lands and for a great number of people, being, as plaintiff is informed and believes, 5,000 in number, there is no other supply available for irrigation, stock, domestic, or manufacturing purposes except the water from said canal. It is alleged that by reason of this dam the waters of Snake river have been backed up from said dam and to and beyond plaintiff's premises and have destroyed the current in the river by means of which plaintiff's water wheels were driven and made to revolve and raise the water to the elevation required for distribution over plaintiff's lands. It is alleged that it is now impossible for plaintiff to so arrange or change his said dams or water wheels or flumes, or to build or construct other dams or water wheels or flumes that will raise any water whatever from said stream that can be used upon the plaintiff's lands, and by reason thereof plaintiff has not been able to irrigate said lands or any part thereof or to raise profitable crops thereon or to use the same as pasture lands, and will not in the future be able to irrigate said lands or to raise profitable crops or any crops thereon, as long as defendant's dam is maintained; that there is no other supply of water available for use upon said lands except the waters of Snake river; that by reason of the backing up of said water and stopping the plaintiff from using said water wheels to raise the waters of Snake river to and upon said lands and cutting off the water supply from plaintiff's lands he has been damaged in the aggregate sum of $56,650. In the first count of the complaint a separate and distinct cause of action is alleged in an averment that about 12 acres of plaintiff's land has been covered by the waters of Snake river backed up by defendant's dam, but the land is not described or its boundaries given, or any particulars stated so that the land can be identified or ascertained. To this cause of action defendant interposed a special demurrer on the ground of uncertainty and the improper joinder of two separate causes of action. This special demurrer appears to be admitted. The defendant also interposed a general demurrer on the ground that the facts stated in the complaint do not constitute a cause of action against the defendant as to either or any of said counts. The demurrer was sustained by the Circuit Court, and the plaintiff has brought the cause to this court upon a writ of error.

Hawley, Puckett & Hawley and W. E. Borah, for plaintiff in error.

E. B. Critchlow (Henderson, Pierce, Critchlow & Barrette and Parley L. Williams, of counsel), for defendant in error.

Before GILBERT, ROSS, and MORROW, Circuit Judges.

MORROW, Circuit Judge (after stating the facts as above). The assignments of error present the single question whether the facts stat-

Digitized by Google

ed in the complaint constitute a cause of action against the defendant.

It is not denied that the plaintiff has the right by appropriation to divert 1,250 miner's inches of the waters of the Snake river, mainly for irrigation purposes, and it is not charged by plaintiff that this amount of water is not still in the river subject to his right of appropriation and diversion. His claim is that he cannot divert it by the means he first adopted for taking the waters from the river, and that the defendant by placing a dam across the river has deprived him of the right to the current of the river which prior to the erection of the dam rendered his means of diversion available. Is this current and the means adopted for the diversion of the appropriated water part of or attached to plaintiff's right of appropriation? It is contended on the part of the plaintiff that the current of the river is necessarily appurtenant to the water location and that the means of utilizing that current is attached as an appurtenance to the appropriation. We have not been referred to any case—and we know of none—where either of these propositions has been upheld.

The claim that the right to the current of the river is appurtenant to the water location is contrary to well-established principles of the common law governing such a relation. The water location was an appropriation and diversion of a certain quantity of the flowing water of the stream. The current of the river is part of the stream. There can be no right to the current of a stream as appurtenant to a diversion of the flowing waters of the stream. The two rights in such case would be equal and of the same character and quality, and one such right cannot be appurtenant to the other. Lord Coke says (Co. Litt. 121b): "A thing corporeal cannot properly be appurtenant to a thing corporeal nor a thing incorporeal to a thing incorporeal. According to this rule land cannot be appurtenant to land." Harris v. Elliott, 10 Pet. 25, 53, 9 L. Ed. 333; Leonard v. White, 7 Mass. 8, 5 Am. Dec. 19; Jackson v. Hathaway, 15 Johns. (N. Y.) 447, 8 Am. Dec. 263; Jones v. Johnston, 18 How. 150, 155, 15 L. Ed. 320. "It follows that things in their nature equal and of like character and grade can never be appurtenant to each other, for the common as well as the legal meaning of the word implies inferiority and dependence, so that a water ditch could never become appurtenant to another water ditch of like character and pass as an incident thereto, for the same reason that one farm will not pass as an appurtenance to another." Donnell v. Humphreys, 1 Mont. 518, 528. The reason for such a rule in the the present case is as forcible as in any of the cases cited. If the plaintiff were permitted to own the current of the stream as appurtenant to his right of appropriation and diversion, he would be able to add indefinitely to the water right he would control and own. There might be a great surplus of water in the stream at and above plaintiff's premises and an urgent demand for a portion of this surplus for beneficial uses, but if an appropriator above should divert a sufficient quantity to lower the current under plaintiff's water wheels so that they would not revolve, the plaintiff would have a cause of action to prevent such an appropriation. It is clear that in such a case the

Digitized by Google

policy of the state to reserve the waters of the flowing streams for the benefit of the public would be defeated.

But aside from this rule of common law, which we think denies the right of the appropriator to claim the current of the stream as appurtenant to his water location, the law of appropriation is itself opposed to such a claim. It is provided in the Constitution of the state of Idaho, art. 3, § 15, that:

"The right to divert and appropriate the unappropriated waters of any natural stream to beneficial uses shall never be denied."

In the Revised Statutes of Idaho of 1887, under the title "Water Rights and Irrigation," a method of procedure is provided for the appropriation and diversion of running water flowing in a river or stream for a useful or beneficial purpose. This procedure involves three distinct acts on the part of the appropriator: First, the person desiring to appropriate water must post a notice in writing in a conspicuous place at the point of intended diversion, stating therein (1) that he claims the water there flowing to the extent of (giving the number) inches measured under a 4-inch pressure, and accurately describing the point of diversion; (2) the purpose for which he claims it and the place of intended use; (3) the means by which he intends to divert it and the size of the flume, ditch, pipe, or aqueduct in which he intends to divert it—a copy of the notice must, within 10 days after it is posted, be recorded in the office of the recorder of the county in which it is posted (section 3160). Second, a diversion of the water within a reasonable time (sections 3157, 3158, 3161, 3162, 3163). Third, the actual application of the water to a useful and beneficial purpose. In Colorado, which like Idaho has adopted the law of appropriation as distinguished from the common-law doctrine of riparian rights, it has been held that there must be not only an actual diversion made with the intent to apply the water to beneficial use, but the water must be actually applied to such use. In Fort Morgan Land & Canal Co. v. South Platte Ditch Co., 18 Colo. 1, 30 Pac. 1032, 1033, 36 Am. St. Rep. 259, Chief Justice Hayt, in delivering the opinion of the court, said:

"From the first this court has recognized and emphasized the idea that a priority could only be legally acquired by the application of the water to some beneficial use. Hence there must be not only a diversion of the water from the natural stream, but an actual application of it to the soil, to constitute the constitutional appropriation recognized for irrigation."

It thus appears that the law of appropriation requires that the appropriator shall post a notice at the point of intended diversion, of the quantity of water claimed; he must make an actual diversion of the water and apply the water to a useful and beneficial purpose, which in the case of irrigation is an application of the water to the soil. In none of these requirements did plaintiff comply with the law in appropriating the current of the river. He did not notify the world that he made such a claim; he made no diversion of such water, and he did not apply it to the soil as required where the appropriation is for the purpose of irrigation. It is clear, therefore, that the current of the river was no part of plaintiff's water location, and that he has no cause of

Digitized by Google

action against the defendant for destroying this current. The claim of the plaintiff that the means of utilizing the current is attached as an appurtenance to the appropriation is likewise untenable. Section 3184 of the Revised Statutes of Idaho is referred to as supporting this claim. That section provides as follows:

"All persons, companies and corporations owning or having the possessory title or right to lands adjacent to any stream, have the right to place in the channel of, or upon the banks or margin of the same, rams or other machines for the purpose of raising the waters thereof to a level above the banks, requisite for the flow thereof to and upon such adjacent lands; and the right of way over and across the lands of others, for conducting said waters, may be acquired in the manner prescribed in the last two sections."

The permission here given is a mere license to the owner of lands adjacent to a stream to use any appropriate method for raising the water to a level above the banks for distribution upon such adjacent lands, but it is immaterial to the state what particular method is used. The landowner may use a ram, a pump, or a wheel, or he may raise the water by means of a ditch. And he may change from one method to another as the situation or circumstances may require. Charnock v. Higuerra, 111 Cal. 473, 476, 44 Pac. 171, 32 L. R. A. 190, 52 Am. St. Rep. 195. The method adopted cannot be said to have attached as appurtenant to the appropriation as against other appropriators of water from the same stream. Perhaps in a conveyance of land having upon it or in the adjacent stream a ram or other machine for raising water from the river such a machine would pass to the grantee of the lands under a deed containing the term "appurtenances," but that would be a very different proposition from the one now under consideration. We are, therefore, of opinion that the means of utilizing the current is not attached as appurtenant to the appropriation.

There is, furthermore, the general principle that the right of appropriation must be exercised with some regard to the rights of the public. It is not an unrestricted right. In Basey v. Gallagher, 20 Wall. 670, 683, 22 L. Ed. 452, the Supreme Court of the United States said:

"Water is diverted to propel machinery in flourmills and sawmills, and to irrigate land for cultivation, as well as to enable miners to work their mining claims; and in all such cases the right of the first appropriator, exercised within reasonable limits, is respected and enforced. We say within reasonable limits, for this right to water, like the right by prior occupancy to mining ground or agricultural land, is not unrestricted. It must be exercised with reference to the general condition of the country and the necessities of the people, and not so as to deprive a whole neighborhood or community of its use and vest an absolute monopoly in a single individual."

In Fitzpatrick v. Montgomery, 20 Mont. 181, 187, 50 Pac. 416, 417, 63 Am. St. Rep. 622, the Supreme Court of the state of Montana, after referring to what has been just quoted from Basey v. Gallagher, said:

"While any person is permitted to appropriate water for a useful purpose, it must be used with some regard for the rights of the public. The use of water in this state is declared by the Constitution to be a public use. Constitution, art. 3, § 15. It is easy to see that, if persons by appropriating the waters of the streams of the state became the absolute owners of the waters without restriction in the use and disposition thereof, such appropria-

Digitized by Google

tion and unconditional ownership would result in such a monopoly as to work disastrous consequences to the people of the state. The tendency and spirit of legislation and adjudication of the northwestern states and territories have been to prevent such a monopoly of the waters of this large section of the country, dependent so largely for prosperity upon an equitable, and, as far as practical, free, use of water by appropriation."

It follows that, in our opinion, the complaint does not state facts sufficient to constitute a cause of action against the defendant. The judgment of the Circuit Court is therefore affirmed.

(161 Fed. 48.)

GRIFFIN v. INTERNATIONAL TRUST CO.

(Circuit Court of Appeals, Ninth Circuit. April 7, 1908.)

No. 1,494.

1. CORPORATIONS—MORTGAGES—TAKING NEW MORTGAGE FOR SAME DEBT—REINSTATEMENT OF ORIGINAL MORTGAGE.

   A corporation executed a mortgage to a trustee to secure a $300,000 issue of bonds. After default in payment of such bonds, it executed a second mortgage to the same trustee to secure an issue of bonds of $500,000, which recited that it was subject only to the prior mortgage, and was given to secure the payment of the bonds given thereunder, which were to be paid by exchanging the same for bonds issued under the new mortgage, and that the holders of such bonds were willing to make the exchange. The first mortgage was not released of record. *Held*, that the provisions of the second mortgage preserved the lien of the first for the benefit of the holders of the bonds so exchanged, but, even if not, that a court of equity would reinstate it for their protection as against an attachment creditor who obtained a lien on the property before the second mortgage was executed, and which was not known to such bondholders or their trustee.

2. MORTGAGES—PRIORITY—RENEWAL.

   The failure of a mortgagee of property in Alaska to ascertain the fact of an attachment lien thereon before taking a renewal mortgage, or to make the attachment creditor a party to the suit to foreclose the same, was not such laches as to debar it from the right to relief by a reinstatement of the original mortgage as against such lien, where no prejudice resulted to the holder thereof.

Appeal from the District Court of the United States for the First Division of the District of Alaska.

In Equity. Action to foreclose two certain mortgages on mining property in Alaska, the first mortgage executed December 15, 1891, and the second executed January 1, 1896; and to restrain a judgment creditor from proceeding with the sale of a part of the mortgaged property under the lien of an attachment levied after the first mortgage and prior to the second mortgage.

John G. Heid, William T. Love, R. F. Lewis, and Alfred Sutro, for appellant.

Shackleford & Lyons, John J. Boyce, and John A. Shackleford, for appellee.

Before GILBERT, ROSS, and MORROW, Circuit Judges.

Digitized by Google

MORROW, Circuit Judge. This was an action brought by the International Trust Company, a corporation, against the American Gold Mining Company, a corporation, Frank W. Griffin, and James M. Shoup, United States marshal. The purpose of the action was: (1) To foreclose two certain mortgages, the first executed December 15, 1891, by the Nowell Gold Mining Company, the predecessor in interest of the American Gold Mining Company, to the International Trust Company, trustee, to secure the payment of 300 bonds of the par value of $1,000 each; the second mortgage executed January 1, 1896, by the Nowell Gold Mining Company to the International Trust Company, trustee, to secure the payment of 500 bonds of the par value of $1,000 each. (2) To enjoin and restrain the defendants James M. Shoup and Frank W. Griffin from proceeding with the sale of part of the mortgaged premises under a judgment entered in favor of Frank W. Griffin July 10, 1905, for $25,000 and interest, secured by the lien of an attachment levied November 24, 1893. The two mortgages are set forth in the bill of complaint. The first executed December 15, 1891, by the Nowell Gold Mining Company, was to secure the payment of 300 bonds of that date for the sum of $1,000 each, with interest at the rate of 7 per cent. per annum. It was provided that 60 of these bonds were to be paid on the 15th day of December of each year from the year 1893 to 1897, and, upon a default for one year on payment of either principal or interest on any of the same, then the whole principal should become due and payable at the option of a majority of the bonds then outstanding. It is alleged in the bill of complaint that none of the 300 bonds secured by the mortgage of December 15, 1891, were paid, and on the 1st day of January, 1896, the Nowell Gold Mining Company, for the purpose of providing for and retiring said $300,000 of bonds and interest thereon, and for the purpose of providing means to aid in the purchase of additional mines and mining properties in the district of Alaska, and of acquiring and constructing milling plants and mining equipments and for other corporate purposes, issued its bonds to the amount of $500,000, being 500 bonds of the par value of $1,000 each, bearing interest at the rate of 7 per cent. per annum. Thirty-five of these bonds were to be paid on the 1st day of January of each year, from the year 1901 to 1913, and the remaining 45 bonds were to be paid on the 1st day of January, 1914. It is alleged in the bill of complaint that of the 500 bonds of $1,000 each 298 were to be issued at the special instance and request of the Nowell Gold Mining Company and sold and delivered, and thereby the payment and retirement of 298 of the bonds of the issue of 300 bonds of the mortgage of December 15, 1891, accomplished and the bonds redeemed; that two of the bonds of the denomination of $1,000 each of the issue of December 15, 1891, were not so redeemed, but remained actually outstanding under and by virtue of the provisions of said mortgage; that the remaining 200 bonds of the issue of January 1, 1896, were executed and delivered, sold on the market, and the proceeds thereon were received by the Nowell Gold Mining Company; that at the same time, and as a part of the same transaction, the Nowell Gold Mining

Digitized by Google

Company made, executed, and delivered to the International Trust Company its mortgage and deed of trust dated January 1, 1896. In this mortgage it was provided that for the purpose of retiring the $300,000 of bonds of the Nowell Gold Mining Company dated December 15, 1891, with unpaid interest thereon, the holders of said bonds and interest being willing to exchange same for an equal amount of bonds of the issue of January 1, 1896, the Nowell Gold Mining Company should issue its bonds to the amount of $500,000, in denominations of $1,000 each, all dated January 1, 1896, and payable at the office of the International Trust Company of Boston, Mass., payment to be made of not less than 35 of said bonds on January 1st of each year from 1901 to 1913, both inclusive. It was also provided that said mortgage was subject only to the mortgage dated December 15, 1891, and given to secure the payment of said $300,000 of bonds of even date therewith, which were to be paid by exchanging the same for the issue of bonds of January 1, 1896.

It is alleged in the bill of complaint that in the year 1898 the Nowell Gold Mining Company amended its charter and legally obtained a change of its name to the American Gold Mining Company; that on December 11, 1902, the plaintiff caused foreclosure proceedings to be instituted for the foreclosure of the mortgage of December 15, 1891, with respect to two of the bonds of the issue of that date, and for the foreclosure of the mortgage of January 1, 1896, with respect to the 498 bonds of the issue of that date; that such proceedings were had in the matter that a decree was entered in favor of the plaintiff in the sum of $745,582, and the property covered by said mortgage was thereunder and thereby foreclosed and sold on the 31st day of March, 1903, and was at the sale bid in by the plaintiff for the sum of $382,000, and plaintiff believed in bidding in said premises it would leave the same free and clear of all incumbrances. The bill of complaint recites the commencement of an action by one M. W. Murray against the Nowell Gold Mining Company on the 11th day of November, 1893, in the district court of Alaska to recover the sum of $25,000, the issuance of a writ of attachment and its levy upon certain property of the defendant on the 24th day of November, 1893. It is alleged that such property was at that time and subsequently subject to the lien of the plaintiff's mortgage of December 15, 1891; that Frank W. Griffin, one of the defendants named in the bill of complaint, was substituted for the said M. W. Murray and as his successor in interest in the attachment suit, and thereafter, on the 10th day of July, 1905, judgment was entered in favor of the said Griffin and against the American Gold Mining Company for the sum of $25,000 and interest; that an order of sale was thereupon issued out of the court upon the judgment, and the property attached was ordered sold by the court. Thereafter a notice of sale was given and published by the defendant Shoup as United States marshal. It is alleged in the complaint that, if the sale is allowed to proceed, the property will be in danger of being sold to parties who have no knowledge of the equities and lien of the plaintiff; that prior to November 3, 1905, plaintiff had no knowledge or notice of the facts pertain-

Digitized by Google

ing to the attachment suit, but had prior to that time been informed by the officers of the defendant corporation, and believed and relied upon said information and representation, that there were no liens or claims intervening between December 15, 1891, and January 1, 1896. It is further alleged that in plaintiff's foreclosure suit commenced December 11, 1902, neither Murray nor Griffin was a party to that action, and that the decree of foreclosure against the property of the defendant corporation was entered by the plaintiff in entire ignorance of the existence of the attachment suit by Murray and his successor, Griffin. It is alleged that plaintiff herein is without speedy or adequate remedy at law; that defendant Frank W. Griffin threatens to sell the property mentioned in the complaint and described as having been attached by the plaintiff in the attachment suit; that said property is a part of the property subject to the mortgage of December 15, 1891, by and through which Shoup, as United States marshal, will sell the same unless previously enjoined, to the irreparable loss and damage of the plaintiff.

The prayer of the bill of complaint is that the holders of the 298 bonds issued under the mortgage of January 1, 1896, be subrogated to the rights of the holders of the 298 bonds issued under the mortgage of December 15, 1891; that an account be taken of the moneys due of principal and interest owing on said bonds and mortgage, and that a decree be entered for the sale of the mortgaged premises for the payment to the plaintiff of the moneys found to be due the defendants and all persons claiming under them subsequent to the commencement of the suit; that the premises described in the mortgage of December 15, 1891, be sold to satisfy said sum of $300,000 and interest thereon, and upon the sale of the premises the sum bid be credited upon the amount due under the mortgage, and that plaintiff have judgment for any deficiency there may be for the difference between the amount so bid and the amount found due under the mortgage; that the mortgage of January 1, 1906, be foreclosed in like manner for the sum of $200,000 and interest thereon, and that the premises covered by that mortgage be condemned and sold to satisfy the said sum of $200,000 and interest, and that defendants Shoup and Griffin be enjoined and restrained during the pendency of the suit from the sale of the premises as described in the writ of attachment and published notice of sale; and that further proceedings under said order and notice of sale be stayed and enjoined until final judgment, decree in the action. Upon the verified bill of complaint, the court issued an order restraining the defendants Griffin and Shoup from proceeding with the sale of the property described in the complaint. The temporary restraining order was subsequently continued in force as a temporary injunction. Thereafter a motion was made to the court to dissolve the temporary injunction, which was denied on the ground that the motion presented to the court all the issues practically involved in the merits of the case, and the court was unable to determine the merits of the case upon a motion to dissolve the temporary injunction.

The defendant Griffin appeals from the order denying the motion to dissolve the temporary injunction; and the only question to be

Digitized by Google

determined by the court is whether the bill of complaint states a cause of action for equitable relief.

We think the express terms of the second mortgage were such as to preserve the lien of the first mortgage for the benefit of the bondholders who should receive bonds under the second mortgage in exchange for bonds issued under the first mortgage. The parties to the two mortgages were the same. The first mortgage was not canceled or released of record, or the plaintiff, as trustee, relieved of its trust under the mortgage; but, on the contrary, the lien was kept alive and the trust continued. The mortgage recited that the holders of $300,000 of bonds issued under the mortgage of December 15, 1891, were "willing to exchange the same for an equal amount of the bonds of the issue of January 1, 1896." Pursuant to this recital the second mortgage contained the express provision that it was "subject only to the mortgage of said last-named party (the Nowell Gold Mining Company) to said party of the second part (the International Trust Company) dated December 15, 1891, and given to secure the payment of said three hundred thousand dollars of bonds of even date therewith which are to be paid by exchanging the same for bonds of said issue of January 1, 1896." Neither the principal or interest of any of these bonds had been paid, and the whole principal had become due at the option of the majority of the bondholders, and the plaintiff, as trustee of these bondholders, was in a position to proceed with the foreclosure of the mortgage given to secure the debt. That it did not do so, and the bondholders did not so request, was because of the plain terms of the mortgage that it was subject to the mortgage of December 15, 1891. The appellant contends that the purchasers of the bonds issued under the mortgage of January 1, 1896, were mere volunteers without any agreement that the mortgage of December 15, 1891, was to be kept alive for their benefit or protection. This is undoubtedly correct with respect to the purchasers of the $200,000 of bonds issued under the second mortgage and sold in the open market for the purpose of providing an additional capital for the use of the Nowell Gold Mining Company; but with respect to the $300,000 of bonds issued for the purpose of exchanging the same for bonds issued under the mortgage of December 15, 1891, the relation of the parties to the transaction was different, and involved different considerations. The bondholders under the first mortgage had a prior lien, which presumably they would not voluntarily surrender until their debt was paid. To carry out the plan of reorganizing the debt of the corporation and enlarging its business, it became necessary to carry the lien of the bondholders under the first mortgage into the second mortgage, in the provision that the second mortgage was subject to the first mortgage, securing the payment of $300,000 of bonds which were to be exchanged for bonds to be issued under the new mortgage. The case of Union Trust Co. v. Illinois Midland, 117 U. S. 434, 6 Sup. Ct. 809, 29 L. Ed. 963, cited by appellant, related to a very different transaction. In that case there was a consolidation of three Illinois railroad companies, and the agreement between the parties in interest was that the bonds of the Illinois Midland Railway Company (the consolidated com-

Digitized by Google

pany) were to be issued "subject and in subordination only to such bonds already issued by the Paris and Decatur Railroad Company as for the time being shall be existing and be preferentially charged on the portion of the undertaking which shall have been constituted with or represent the undertaking of the last mentioned railway company." Under this agreement the bonds of the consolidated company were subject only to the priority of the bonds of one of the companies entering into the consolidation with respect to the property of that company, while for the "time being" the bonds of the latter company "shall be existing." There was no reservation in the agreement in favor of the first bondholder if he exchanged his bonds for bonds of the consolidated company. The agreement was expressly otherwise. The court says:

"The Paris and Decatur bonds * * * were exchanged and surrendered specifically for cancellation. * * * Each person who surrendered gave up his lien under the Paris and Decatur mortgage, and took one under the Illinois Midland Mortgage, as it was, and took the risk of its value. * * * There was no contingency and no reservation on the part of those surrendering. The surrender was for cancellation and was cancellation. * * * All parties got what they contracted for."

The acceptance of bonds issued under the second mortgage in substitution for bonds issued under the first mortgage worked a cancellation of the lien of the first mortgage, because that was one of the terms of the agreement between the parties to the transaction under which the bonds were exchanged. There was no such agreement in the present case, and no cancellation of the first lien. On the contrary, the lien was preserved in the second mortgage, under the terms of which the exchange of bonds was made. The question in such a case is one of agreement or intention of the parties, and, as said by the Circuit Court of Appeals in the Seventh Circuit, in Mowry v. Farmers' Loan & Trust Company, 76 Fed. 38, 43, 22 C. C. A. 52, 56:

"The question must be resolved in each case upon the facts of the particular transaction. Where a novation is thus sought to be established, it must be shown that the substitution of the new obligation was with design and intent to extinguish the old obligation, and, as such an act would upon its face appear to be against the interest of the holder of the bond, such intent will not be presumed, but must be clearly established. A mere change in the form of the mortgaged debt such as the substitution of new bonds for those originally secured by it would not extinguish or affect the lien."

To same effect is Fidelity Insurance, Trust & Safe Deposit Co. v. Shenandoah Val. R. Co., 86 Va. 1, 9 S. E. 759, 19 Am. St. Rep. 858.

The equitable jurisdiction of a court of equity is not, however, limited to granting relief to a bondholder under a second mortgage against the claim of an intervening lien when there is some agreement or other evidence of an intention to continue the prior lien for the benefit of the holders of the second mortgage. The court may grant relief by way of subrogation when the prior lien has been surrendered and canceled in ignorance of the existence of the intervening lien, or where by reason of any other fact it would be manifestly inequitable to admit the claim of the intervening lien to a priority. In such case the holder of the second lien is deemed in

Digitized by Google

equity to have succeeded to the right of the prior lien by an equitable assignment.

In the case of the International Trust Company v. Davis & Farnum Mfg. Co., 70 N. H. 118, 46 Atl. 1054, the action was a bill in equity to restrain the levy of execution against an electric light company, except in subordination to the rights of bondholders. In 1895 the corporation issued bonds to the amount of $50,000 secured by a mortgage running to the plaintiff as trustee. The mortgage was recorded August 14, 1895. In January, 1896, because the validity of the bonds was questioned they were canceled, the mortgage discharged and a new issue made for $40,000 and secured by a like mortgage. The new bonds to the amount of $30,000 were substituted for the former issue. In September and October, 1895, the light company's real estate was attached by creditors, and, having obtained judgment, they were about to levy upon it when they were enjoined. The question was whether the attachments levied in September and October, 1895, were prior liens to the mortgage executed in January, 1896, which secured bonds issued in exchange for bonds issued under the prior mortgage recorded in August, 1895. In this case the prior bonds had been canceled, and the prior mortgage discharged. The court held that:

"The discharge of the prior mortgage and the taking of the later one in its stead did not affect the rights of the parties. A discharge of a mortgage is always treated as an assignment, when justice requires such a course for the protection of equitable rights. Holt v. Baker, 58 N. H. 276, and cases cited. The attaching creditors have not done or omitted to do any act relying upon the recorded discharge (Holt v. Baker, supra), and cannot complain because the transaction is given the effect intended by the parties thereto. By their attachments these creditors became subsequent incumbrancers, against whom the rule of equitable assignment has frequently been applied. Hammond v. Baker, 61 N. H. 53, and cases cited."

In Pearce v. Buell, 22 Or. 29, 29 Pac. 78, the holder of a mortgage released his mortgage, and took a second mortgage in ignorance of an intervening judgment lien. It was held that the mortgagee was entitled to have his original mortgage restored as against the judgment lien. The court, in discussing the question, said:

"In such a case a court of equity will look through the form to the substance, and keep alive the original security, if it can be done without injury to third parties. No rule of law is better settled than if a holder of a mortgage take a new mortgage as a substitute for a former one, and cancel and release the latter, in ignorance of the existence of an intervening lien upon the mortgaged premises, although such lien be of record, equity will, in the absence of the intervening rights of third parties, restore the lien of the first mortgage, and give it its original priority. Jones, Mortg. § 972; Geib v. Reynolds, 35 Minn. 331, 28 N. W. 923; Bruse v. Nelson, 35 Iowa, 157; Downer v. Miller, 15 Wis. 677; Vannice v. Bergen, 16 Iowa, 555, 85 Am. Dec. 531; Robinson v. Sampson, 23 Me. 388; Corey v. Alderman, 46 Mich. 540, 9 N. W. 844; Cansler v. Sallis, 54 Miss. 446. The fact that the mortgage was released in ignorance of the existence of the intervening lien is, in equity, deemed such a mistake of fact as to entitle a party to relief, although such lien may have been of record. Bruse v. Nelson, supra; Cobb v. Dyer, 69 Me. 494; Geib v. Reynolds, supra."

In 27 Cyc. 1222, the law relating to the substitution or renewal of a mortgage, is stated as follows:

Digitized by Google

"Entering satisfaction of a mortgage and taking a new one, when designed by the parties to be merely a continuation of the first mortgage, and when the two acts are practically simultaneous or parts of the same transaction, is not an extinguishment of the mortgage, but a renewal thereof, and does not give priority to an intervening judgment or mortgage creditor of the mortgagor, especially where it is done in good faith, in ignorance of the existence of the intervening lien, and without any intention to release the lien of the mortgage."

In Jones on Mortgages, § 971, the law applicable to this case is fully stated, as follows:

"When a new mortgage is substituted in ignorance of an intervening lien, the mortgage released through mistake may be restored in equity and given its original priority as a lien. This was done in a case where the holder of a first mortgage, in ignorance of the existence of a subsequent one on the premises, released his mortgage and took a new one. There was no evidence of mistake except such as might be inferred from the mortgagee's ignorance of the existence of the intermediate mortgage, and there was no evidence that he would not have made this arrangement had he known this fact; but it was considered that, although the court was not at liberty to infer facts not proved, yet that it was at liberty to draw all the inferences which logically and naturally follow from the facts proved; that it is not an act of reasonable prudence and caution such as men commonly use in the conduct of business affairs for one having a first mortgage upon property, without consideration or other apparent motive, to release it, and take a new mortgage subject to a prior lien of a considerable amount; and therefore it may be inferred that the mortgagee would not have made the release had he known of the intervening mortgage. A court of equity will grant relief on the ground of mistake, not only when the mistake is expressly proved, but also when it is implied from the nature of the transaction.

"Where a new mortgage is taken to secure the payment of the same debt, and the fact is so stated in the mortgage, and the old mortgage is released and the new one recorded on the same day, the new mortgage will have priority of any intervening incumbrance. Where a second mortgagee, in order to enable the mortgagor to renew a first mortgage and give it priority as a lien, canceled his mortgage and took a new one to secure the same notes, subject to the renewed first mortgage, he did not thereby release the lien created by his original mortgage, and the mortgagor's wife obtained no new rights as against the second mortgagee."

Authorities might be multiplied, showing the various considerations that will justify a court in protecting a bondholder who has surrendered the evidence of a lien to accept a new one when the claim of an intervening lien threatens to deprive him of the equitable right to the prior lien, but the cases already cited are sufficient, we think, to establish the equitable right of the bondholders in this case to their prior lien upon the facts stated in the complaint.

The appellant makes the further objection that the appellee has been guilty of such gross and inexcusable laches and negligence that the appellee and the bondholders are precluded from seeking relief in a court of equity. This objection is based upon the allegation of the complaint that prior to November 3, 1905, plaintiff and the bondholders under the first mortgage had no knowledge or notice of the attachment suit, "but had prior thereto been informed by the officers of the defendant corporation, and believed and relied on said information and representation, to wit, that there were no liens or claims intervening between December 15, 1891 and January 1, 1896." It is contended that the appellee should have examined the official rec-

Digitized by Google

ords at Juneau, and discovered the Griffin attachment and made him a party to the foreclosure proceedings; but Griffin has not been prejudiced in any of his rights by the foreclosure proceedings. Upon the facts stated in the complaint, we have determined that his attachment was subject to the mortgage lien under the mortgage of December 15, 1891, and that this lien was carried into the mortgage of January 1, 1896, either in express terms or was preserved by the doctrine of equitable assignment for the benefit of the bondholders under the mortgage of December 15, 1891, who exchanged their bonds for bonds under the mortgage of January 1, 1896. This being so, the Griffin attachment created a lien only on the mortgagor's equity of redemption, and the only effect of the failure of the mortgagee to make the attaching creditor a party to the foreclosure suit was to leave him with the right of redemption, in the event he obtained a judgment on his claim. London & San Francisco Bank v. Dexter, Horton & Co, 126 Fed. 593, 61 C. C. A. 515. Griffin obtained judgment on July 10, 1895. The appellee learned of his claim and judgment November 3, 1905, and brought this suit on December 19, 1905, to set aside the foreclosure suit and obtain a decree foreclosing both mortgages in accordance with the rights of the respective bondholders, and for the foreclosure of all rights of redemption. In this action Griffin's rights will be protected as fully as though he had been a party to the original foreclosure suit.

Under this aspect of the case, we cannot, under the facts stated in the complaint, hold that the appellee and bondholders are chargeable with such negligence that they cannot seek relief in a court of equity. We are of opinion that the complaint states a cause of action for equitable relief, and that the court was right in denying appellant's motion to dissolve the temporary injunction.

The order of the District Court is affirmed.

(161 Fed. 56.)

GREAT FALLS NAT. BANK v. McCLURE et al.

(Circuit Court of Appeals, Ninth Circuit. April 7, 1908.)

No. 1,496.

1. FRAUDULENT CONVEYANCES—SUFFICIENCY—ATTACHMENT—LACHES IN ENFORCEMENT.

   That no attempt was made to enforce a judgment in an action at law in which property was attached until five years after it was rendered is not ground for the annulling of such judgment by a court of equity at suit of a subsequent creditor of the same debtor, who brought an action on his claim and recovered judgment after execution had been issued on the prior judgment; no facts being alleged to show that such prior judgment was not based on a valid indebtedness.

2. SAME—SUIT FOR ANNULMENT—SUFFICIENCY OF BILL.

   A bill by a judgment creditor of a mining company to annul a prior judgment obtained against such company by another creditor, on the ground that the latter made himself personally responsible for complainant's debt, that when his own debt was created he made certain promises to the company which he did not perform, and that the company, in which such prior judgment creditor was a large stockholder, shut down its

Digitized by Google

works and failed to redeem property sold under an execution against it, *held* not to allege facts which entitled complainant to the relief sought.

Appeal from the Circuit Court of the United States for the District of Montana.

A. C. Gormley, for appellant.
Ira T. Wight, for appellees.

Before GILBERT, ROSS, and MORROW, Circuit Judges.

ROSS, Circuit Judge. The sufficiency of the bill of complaint is the sole question for consideration on this appeal. It was filed February 25, 1907, and alleges, among other things, that on the 14th of December, 1901, the defendant Charles D. McClure commenced an action in the court below against the Diamond R Mining Company to recover certain money theretofore advanced by him to the company, in which action a writ of attachment was issued, directed and delivered to the defendant Merrifield as marshal, in pursuance of which writ the marshal levied upon certain real estate in Cascade county, Mont., belonging to the mining company, and also upon certain of its personal property there situated, placing in charge of the latter a keeper, a description of all of which property is contained in the bill, and constituting, according to the averments of the bill, all of the property owned by the company. The bill alleges that summons in that action was served upon the president of the mining company, L. S. McClure, a brother of Charles D. McClure, and that on the 16th day of January, 1902, a judgment by default was entered in the action against the company and in favor of the plaintiff therein for the sum of $86,180 and $53.30 costs. It is alleged that the plaintiff therein did not cause a writ of execution to be issued upon the judgment until January 10, 1907, and "that the said defendant has by his laches and unreasonable delay waived, abandoned, and lost whatever lien he may have had or claimed upon said property." The bill alleges that on the 17th day of December, 1907, the complainant commenced an action in the district court of the Eighth judicial district of the state of Montana, in and for the county of Cascade, against the same mining company, in which action it procured a writ of attachment to be issued, directed to the sheriff of the county of Cascade, which the sheriff undertook to levy upon the same property theretofore attached and held by the marshal in the suit of Charles D. McClure against the mining company; the personal property, however, remaining in the possession of the keeper appointed by the marshal. The bill alleges that, after due service of summons in the action so brought in the state court, judgment was duly entered therein against the defendant company, and in favor of the plaintiff in that action, for the sum of $25,304.84 and $27.70 costs, which judgment was thereupon duly docketed in the office of the clerk of the state court, no part of which has been paid. The bill shows that the action brought by the Great Falls National Bank in the state court was, aside from two claims assigned to it amounting in the aggregate to $3,261.37, based upon certain promissory notes executed by the mining company in

Digitized by Google

consideration of money loaned to it by the bank, and it also shows that the preceding action brought by Charles D. McClure against the mining company in the court below was for money by him theretofore loaned to the company. The prayer of the bill is for a—

"decree that complainant has a first and prior lien upon all of said property, and that the attachment or pretended attachment made in said cause of Charles D. McClure, plaintiff, against Diamond R Mining Company, defendant, hereinbefore mentioned, is null and void and of no effect, or in any event has become lost and abandoned; that the judgment entered therein is void as to this complainant, or in any event has become satisfied; that the writ of execution therein be withheld; that the defendants herein, their officers, agents, and servants, be restrained and enjoined from selling or disposing of, in any manner whatsoever, under the said writ of execution issued in the above-mentioned action, any of the property herein described and set forth; and for such other and further relief as to the court may seem meet and equitable."

As the sole basis for such relief the bill alleges, in addition to the matters above stated, that Charles D. McClure and L. S. McClure are brothers, and during all of the times mentioned in the bill owned and controlled, and still own and control, a majority of the capital stock of the mining company; that L. S. McClure was a director and the general manager of the mining company, and since the 12th day of June, 1900, has also been its president, and was also during the times mentioned in the bill the agent and representative of his brother, Charles D. McClure, who was also a director of the company until October 9, 1900; that the moneys borrowed from the complainant were requested by the mining company for the purpose of meeting its urgent current expenses in building a concentrator at its mine in the town of Neihart, Cascade county, Mont., and that the complainant refused to loan the company any money except upon the understanding that Charles D. McClure—

"would immediately repay the same in preference to any other indebtedness of the said Diamond R Mining Company, and before any of said moneys were so advanced, and as a part of the consideration therefor, it was so understood and agreed that the said Charles D. McClure would repay the same to the complainant as aforesaid, and fully protect the complainant against any loss or damage as the result of said loans to the said defendant company; that some time subsequent to the advancement of said sums, aggregating $20,000, the petitioner demanded payment thereof from the said Charles D. McClure, and he promised to pay the same, but notwithstanding the aforesaid facts and circumstances, whereby the complainant was led to believe and did believe that it would not be obliged to bring suit by attachment or otherwise to enforce the payment of said indebtedness, the complainant knowing at all times that the said Charles D. McClure was the only other large creditor of the defendant company, the said Charles D. McClure did nevertheless institute the aforesaid action, and, as hereinbefore set forth, levied upon and attached all the property of any kind and character belonging to the said defendant Diamond R Mining Company; that the said attachment by the defendant herein, Charles D. McClure, as plaintiff in said action, was not sought or made in good faith, as stated in his affidavit therefor, but was made, and the said action prosecuted and judgment therefor taken, for the express purpose of hindering, delaying, and defrauding this complainant and other creditors out of their claims and demands, and the said proceedings will have the effect so intended unless set aside by this court."

It is further alleged in the bill that in the year 1900 a concentrator with a daily capacity of 100 tons had been completed by the mining

Digitized by Google

company for the purpose of concentrating its ores, which was working successfully, when the McClures—

"controlling the affairs of the company as aforesaid, proceeded to enlarge said concentrator so as to make the same of a capacity of 300 tons of ore daily, and it was done at an additional cost and expense of about $100,000 (most of which was advanced by said Charles D. McClure, one of the defendants herein, and embraces the moneys sued for in the aforementioned action); that the company voted to enlarge said concentrator and to borrow said money under the promise and agreement of said Charles D. McClure that he would consolidate the Broadwater group of mines, then owned by him, with the mines of said company, but which promise and agreement he has never kept, and there has thereby been a failure of consideration for the notes sued on by said Charles D. McClure, plaintiff in said action; that the said concentrator, after successfully treating the ores on the dump of said company as aforesaid, was thereafter used by said Charles D. McClure for his sole benefit in concentrating ores from his said Broadwater group of mines, under a contract of 75 cents per ton, which was a loss to said company, instead of being used to treat the ores from the company's mine as originally intended; that notwithstanding that the said concentrator was reasonably worth the sum of $175,000, if the same were to be kept in operation in pursuance of the original plan, and notwithstanding, also, that the mining claims and property of the defendant company were, taken in connection with the concentrator, then and there reasonably worth the sum of $500,000, and could have been worked and operated at a profit, all of which was well known to them, the said Charles D. McClure and L. S. McClure, acting in collusion for the purpose of cheating and defrauding the complainant and other creditors, as well as the minority stockholders of the defendant company, closed down the said concentrator, and failed and refused to open up the defendant company's mine, and at once instituted the aforesaid action, and levied upon and attached all of the defendant company's said property."

The bill also alleges that in the year 1903 one Bartlett recovered a money judgment against the mining company in the district court of Montana for the county of Cascade, under which the ground upon which the first part of the mining company's concentrator was erected was sold, and "that the defendant herein, Charles D. McClure, and his brother, L. S. McClure, acting collusively and fraudulently as aforesaid, took no steps whatsoever to redeem said property of the company, or to protect the interests of the stockholders or creditors thereof," but that on the 23d day of March, 1905, Charles D. McClure himself redeemed the property so sold, taking a deed therefor, and—

"that under and by virtue of the provisions of section 1236 of the Code of Civil Procedure of the state of Montana for 1895 the said Charles D. McClure, plaintiff in said action, would not have permitted this complainant or any other redemptioner to redeem from him, except by paying the amount so paid by the defendant herein as aforesaid, and also the amount of defendant's said judgment, to wit, $86,180, with interest thereon from the date thereof; that this prejudice and damage to complainant has resulted because of said defendant's delay and laches in not having execution issued upon his judgment in the aforementioned action."

The bill also contains the allegation that the McClures—

"were acting in collusion and in fraud of the rights of the complainant and other creditors of the defendant company when they created the indebtedness for enlarging the concentrator, when they closed down the defendant company's concentrator and failed and refused to open its mines, and when the aforesaid attachment suit of the defendant herein, Charles D. McClure, plaintiff in said action, was instituted and judgment by default taken after serv-

Digitized by Google

ice upon said L. S. McClure, and also when they delayed for five years to take any steps whatever to sell the property held under said attachment, leaving this property during all of said time in the custody of their said employé, John L. Tripp; that they also acted in collusion and for the same fraudulent purpose and design in making no reasonable effort to pay the said claim of George F. Bartlett, and in permitting the sale of said land and premises to satisfy his said judgment, and in effecting the redemption of said property in the manner aforesaid, to the great damage, loss, and injury of this complainant, and other creditors, as well as the minority stockholders of the defendant company; that by reason of all the acts aforesaid the said attachment lien and also the judgment in said cause should be held fraudulent and void as to this complainant."

We are unable to see that any of the alleged frauds constitute any valid reason for avoiding the judgment in favor of Charles D. McClure. There is nothing in the bill showing that the amount for which it was given was to any extent in excess of what was justly due McClure on the notes the company executed to him for the loan. Surely a court of equity will not undertake to annul a judgment rendered in an action at law, in the absence of facts showing that there was a meritorious defense to the action (White v. Crow, 110 U. S. 183, 4 Sup. Ct. 71, 28 L. Ed. 113), more especially when the attempt is not made until more than five years after the entry of the judgment at law, no excuse for the delay appearing. Denton v. Baker, 93 Fed. 46, 35 C. C. A. 187. If Charles D. McClure made himself personally responsible for the money the complainant subsequently loaned the mining company, complainant might have sued him therefor, and if it be true, as alleged, that he agreed with the mining company to consolidate with its mines the Broadwater group of mines owned by him, his alleged failure to keep that agreement might have given the mining company a cause of action against him, but is no ground for annulling a judgment in his favor based upon notes for money loaned at the instance of a subsequent creditor of the same debtor. Neither do we see how that result can be effected by the alleged closing down of the concentrator by the company, or the alleged failure of the latter to redeem that portion of the ground upon which the original concentrator was erected from the sale thereof made under the judgment given against the company in favor of Bartlett. We think the court below was right in holding that the facts alleged in the bill are insufficient to entitled the complainant to any of the relief sought.

The judgment is affirmed.

(161 Fed. 60.)

COLUMBIA CANNING CO. et al. v. HAMPTON et al.

(Circuit Court of Appeals, Ninth Circuit. April 7, 1908.)

No. 1,422.

1. NAVIGABLE WATERS—SHORE LANDS—RIGHTS OF RIPARIAN OWNER IN ALASKA.

Under Act May 14, 1898, c. 299, 30 Stat. 409 (U. S. Comp. St. 1901, p. 1412), extending the homestead laws to Alaska, which expressly provides that nothing therein contained shall be so construed as to authorize entries to be made, or title to be acquired to the shore of any navigable waters, a location of land on a shore under the soldiers' additional home-

Digitized by Google

stead scrip act does not give the proprietor any right in the land lying below the line of ordinary high tide.

2. INDIANS—LANDS—POSSESSORY RIGHTS IN ALASKA.

Act May 17, 1884, c. 53, 23 Stat. 24, extending the mining laws to Alaska, section 8 (p. 26) which provides that Indians or other persons shall not be disturbed in the possession of any lands "actually in use or occupation or now claimed by them," refers only to possession held at the time of its passage, and does not protect possession acquired since.

3. NAVIGABLE WATERS—RIGHTS OF RIPARIAN OWNER.

While the owner or locator of lands in Alaska which border on navigable or tidal waters has under the general law the right of access to such waters for the purpose of navigation, he has no right or title in the soil below high-water mark, and no right of possession which will support an action against an intruder for interfering with or obstructing him in the erection and use of a structure upon the shore below such high-water mark, unless it prevents or obstructs his access to the navigable waters.

[Ed. Note.—For cases in point, see Cent. Dig. vol. 37, Navigable Waters, §§ 246–249.]

4. FISH—PRIVATE RIGHT OF FISHERY IN PUBLIC WATERS—RIPARIAN OWNER IN ALASKA.

An owner or claimant of lands in Alaska which border on navigable waters, having no right to the shore lands, has no exclusive right of fishery in such waters nor to erect and maintain a fish trap either on the shore between high and low water mark, or in the adjacent deep waters to the exclusion of others.

Appeal from District Court of the United States for the First Division of the District of Alaska.

In Equity. This was an action in the court below brought by the appellee W. H. Hampton, as complainant, against appellants, as defendants, to restrain the latter from interfering with or obstructing the plaintiff in the use of the structure which he had commenced to erect for a fish trap at a point on St. Mary's Peninsula on the north shore of Lynn Canal, a navigable arm of the North Pacific Ocean in Alaska. Upon evidence taken before the court a final decree was entered in favor of the plaintiff. Defendants appeal.

R. W. Jennings, T. A. Marquam, and Lorenzo S. B. Sawyer, for appellants.

Jno. R. Winn and Newark L. Burton, for appellee W. H. Hampton.

Before GILBERT, ROSS, and MORROW, Circuit Judges.

MORROW, Circuit Judge. The complainant alleges that on the 19th day of April, 1905, plaintiff entered upon and staked out and surveyed a piece or parcel of land on St. Mary's Peninsula, on the north shore of Lynn Canal, in Alaska. The land described in the complaint has for its southern boundary the meander line of the shore of Lynn Canal at high-water mark. The three other boundary lines, on the north, east, and south, are each 20 chains in length. It is alleged that at the time plaintiff entered upon said land the same was government land, unoccupied, unappropriated, and open to entry, bordering upon the navigable waters and extending down to the line of ordinary high tide of Lynn Canal, navigable water of the North Pacific Ocean; that said entry, staking out, and surveying were done by plaintiff with the intention of obtaining title to said piece of land from the Government

Digitized by Google

of the United States under what is known as "Soldiers' Additional Homestead Scrip Act," and it was then laid out and entered upon by plaintiff for, among other purposes, building and constructing out from the shore line of said claim into deep water in said Lynn Canal what is known as a fish trap for the purpose of catching salmon; that the location so selected by plaintiff for that purpose was an exceptional one, for the reason that the shore line above and below said location is precipitous and mountainous, and the plaintiff alleges that the waters of Lynn Canal up and down the shore in both directions from said location are so deep and the bottom so rocky that it is impossible to construct a fish trap and maintain or operate the same, and the waters at said point where plaintiff had commenced the construction of said trap abound in salmon, and the fish running in schools along the shore line can be caught in large quantities; that for the purpose of constructing a fish trap immediately in front of said claim so staked out plaintiff on May 9, 1905, engaged the services of a pile driver and obtained piles and piling, and commenced the driving of piles at or near the line of ordinary high tide abutting upon the property described, driving a row of piles the line of which would be at an angle of about 45 degrees with the shore line of said land so staked out, said piles being 11 in number, and placed at a distance of about 10 feet apart; that, after the driving of the 11 piles, work and operations were temporarily suspended, in order that the plaintiff might procure a raft of piles to complete the said trap; that plaintiff was then and at the time of the filing of the complaint ready to go ahead with the construction of said trap, and had all the necessary trap, web, hearts, pots, and spillers for the completion of said trap, and for the running and operation of the same; that favorable locations for fish traps of the kind and nature referred to are scarce and are of great value; and plaintiff alleged that he was entitled to the use of the shore line abutting upon the piece of property so entered by him for the purpose of landing his nets, operating seines, and removing fish from said trap, and for the landing of small boats, skiffs, and scows to be used in said fish business; that the waters in which said piles were driven are waters that had been theretofore unappropriated and unused by any one for fishing or any other purpose; that said waters constitute a common fishery in which prior rights are gained for the purpose of fishing by the first occupant on such ground, and that plaintiff was the first occupant on the same; that after plaintiff had staked out and surveyed the lands described, and procured the services of the pile driver and driven piles as alleged, while plaintiff was absent from the ground for the purpose of securing piles and piling for the completion of the trap, but was in possession of the premises by an agent and employé, defendants, through their agents, servants, and employés, entered upon the ground and tide lands and waters immediately in front of and abutting the land laid out and described as entered by plaintiff, and within a few feet of the southerly side of the line of piles so driven by plaintiff, and drove another line of piles, without the consent and against the will and express wishes of the plaintiff. It is alleged that, unless defendants are restrained by the court, they will proceed to complete their said piling, and will so finish and construct a trap that it

Digitized by Google

will cork the trap of the plaintiff, and prevent plaintiff from catching fish. The threatened injury to plaintiff is stated; and it is alleged that, unless the defendants are restrained from their threatened trespass, plaintiff will suffer irreparable damage. To this complaint the defendants interposed a demurrer, on the ground that the complaint did not state facts sufficient to constitute a cause of action to entitle the plaintiff to the relief sought, or to any relief. The court overruled the demurrer. This action of the court is assigned as error.

Plaintiff's entry and location of the tract of land under the provisions of law relating to the acquisition of title through soldiers' additional homestead rights gave him no possessory right to the shore in front of or abutting upon such location. Act Cong. May 14, 1898, c. 299, 30 Stat. 409 (U. S. Comp. St. 1901, p. 1412), "extending the homestead laws and providing for right of way of railroads in the District of Alaska, and for other purposes," provided specifically in section 1 that nothing therein contained should "be so construed as to authorize entries to be made, or title to be acquired, to the shore of any navigable waters within said district." Plaintiff alleged in his complaint that his entry and location of the upland under the soldiers' additional homestead scrip act was for, "among other purposes, building and constructing out from the shore line of said claim into deep water in said Lynn Canal what is known as a fish trap," and in carrying out this purpose he "commenced the driving of piles at or near the line of ordinary high tide." This structure of piles which he designed for a fish trap was intended, therefore, to commence at the shore line of ordinary high tide, and to extend out into deep water. Plaintiff also alleged that he was entitled to the use of the shore line abutting upon the piece of property so entered by him for the purpose of landing his nets, operating seines, and removing fish from said trap, and for the landing of small boats, skiffs, and scows to be used in said fish business. The shore is that ground that is between ordinary high-water and low-water mark. Shively v. Bowlby, 152 U. S. 1, 12, 14 Sup. Ct. 548, 38 L. Ed. 331. Plaintiff's claim as alleged in his complaint, was therefore to occupy the shore between high tide and low tide abutting upon his upland location as a basis for the purpose of carrying on the fishing business, in connection with a fish trap extending out into the navigable waters of Lynn Canal. The plaintiff could acquire no possessory right, under the act of May 14, 1898, to occupy this shore for the purpose of carrying on the fishing business or for a fish trap, and he had no right of possession of such shore under the act upon which he could base an action against the defendants for interfering with or obstructing him in the use of such shore.

Act May 17, 1884, c. 53, 23 Stat. 24, 26, establishing a civil government in Alaska, provided, in section 8, for a land district in the territory, and extended the laws of the United States relating to mining claims to the district. It was further provided in section 8:

"That the Indians or other persons in said district shall not be disturbed in the possession of any lands actually in use or occupation or now claimed by them but the terms under which such persons may acquire title to said lands is reserved for future legislation by Congress."

Digitized by Google

The act clearly refers to the possession held at the time of the passage of that act by Indians and other persons in the District of Alaska, and it was such possession that was not to be disturbed. It did not provide for the protection of the possession of any lands by any person or persons who might acquire possession or make claim thereto after that date. Heckman v. Sutter, 128 Fed. 393, 395, 63 C. C. A. 135. The possession which the plaintiff alleges he acquired in April 1905, was therefore not a possession recognized or in any way protected by the act of May 17, 1884. The littoral right attached to plaintiff's homestead location entitled him to free access to the navigable waters of Lynn Canal, but not to build upon the shore or erect any structure reaching out into deep water so as to obstruct navigation. In Gould on Waters (3d Ed.) § 149, this right is stated as follows:

"But a littoral proprietor, like a riparian proprietor, has a right to the water frontage belonging by nature to his land, although the only practical advantage of it may consist in the access thereby afforded him to the water for the purpose of using the right of navigation. This right of access is his only, and exists by virtue and in respect of his riparian property. It exists in the case of tide waters, even where the shore is the sovereign's property, both when the tide is out and when it is in. It is distinct from the public right of navigation, and an interruption of it is an encroachment upon a private right, whether caused by a public nuisance or authorized by the Legislature."

In Hardin v. Jordan, 140 U. S. 371, 381, 11 Sup. Ct. 808, 838, 35 L. Ed. 428, Mr. Justice Bradley said:

"With regard to grants of the government for lands bordering on tide water, it has been distinctly settled that they only extend to high-water mark, and that the title to the shore and lands under water in front of lands so granted inures to the state within which they are situated, if a state has been organized and established there. Such title to the shore and lands under water is regarded as incidental to the sovereignty of the state—a portion of the royalties belonging thereto and held in trust for the public purposes of navigation and fishery—and cannot be retained or granted out to individuals by the United States."

In Shively v. Bowlby, 152 U. S. 1, 58, 14 Sup. Ct. 548, 38 L. Ed. 331, Mr. Justice Gray, discussing this same question, said:

"Grants by Congress of portions of the public lands within a territory to settlers thereon, though bordering on or bounded by navigable waters, convey of their own force no title or right below high-water mark, and do not impair the title and dominion of the future state when created; but leave the question of the use of the shores by the owners of uplands to the sovereign control of each state, subject only to the rights vested by the Constitution in the United States."

It follows from these authorities that while the owner or locator of lands in Alaska which border upon navigable or tidal waters has, under the general law, the right of access to such waters for the purpose of navigation, he can acquire no right or title in the soil below high-water mark, and he can have therefore no right of possession upon which he can base an action against an intruder whom he charges with interfering with and obstructing him in the erection and use of a structure upon the shore below such high-water mark. He may have, however, a right of action against an intruder who places ob-

Digitized by Google

stacles on the shore that prevent him from having access to the navigable waters; but that is not this case. The plaintiff does not charge that defendants' structure is a nuisance, or that the defendants are obstructing him in having access to the navigable waters of Lynn Canal. The charge is that defendants are erecting on the shore a structure of piles for a fish trap which will be an obstruction to a similar structure which the plaintiff had commenced to erect. This is not the statement of a cause of action under the general law relating to littoral rights, nor under any statute relating to the waters of Alaska to which our attention has been called.

There remains but one other question to be considered and that is plaintiff's right to take possession of the shore for the purpose of erecting a fish trap in the exercise of the public right of fishing. In support of this claim, portions of section 394 of 2 Farnham on Waters and Water Rights is cited as authority. The section refers to various circumstances and conditions under which fishing rights have been claimed in the waters of a number of states, and such claims sanctioned or denied by the courts, as shown by the cases cited. It would extend this opinion unnecessarily to discuss those cases cited by the author as supporting the text, which it is contended recognizes plaintiff's right as claimed in this case. It is sufficient to say that we do not find in the text of section 394 or any of the cases cited any authority for the right claimed by plaintiff to erect a structure on the shore or in the adjoining deep water for fishing purposes, with the right to exclude the defendants therefrom under the circumstances and conditions of this case. But, turning to section 375 of the same work, we find clearly stated the law applicable to this case. The author says:

"An exclusive right of fishery in the water adjacent to property is not one of the rights of the riparian owner. He can claim such right only when he owns the soil under the water, or the right has been expressly conferred upon him."

In support of this doctrine the author cites Tinicum Fishing Co. v. Carter, 61 Pa. 21, 100 Am. Dec. 597; Arnold v. Mundy, 6 N. J. Law, 4, 10 Am. Dec. 356; Shrunk v. Schuylkill Nav. Co., 14 Serg. & R. (Pa.) 71; Skinner v. Hettrick, 73 N. C. 53; Collins v. Benbury, 25 N. C. (3 Ired. L.) 277, 38 Am. Dec. 722. The case of the Pacific Steam Whaling Company v. Alaska Packers' Association, 138 Cal. 632, 636, 72 Pac. 161, is also a case in point. It was there said by the Court:

"The right of fishery in the waters of the ocean, whether in the open sea or where the waters ebb and flow over tide lands, is a public right which may be exercised by any citizen. Shively v. Bowlby, 152 U. S. 1, 14 Sup. Ct. 548, 38 L. Ed. 331, and cases there cited; Hardin v. Jordan, 140 U. S. 371, 11 Sup. Ct. 808, 838, 35 L. Ed. 428; Mann v. Tacoma Land Co., 153 U. S. 273, 14 Sup. Ct. 820, 38 L. Ed. 714. In its very nature the exercise of the right of fishing in the public waters of the ocean is not, and cannot be, exclusive. Its exercise, no matter by whom or for what length of time, is only the exercise of a public right. There can be no possession for the purpose of fishery of an area of land covered by the waters of the ocean that is at all analogous to an actual possession of a tract of upland which might give the possessor a right of action against a mere trespasser. One who exercises this public right of fishery in the sea does not by that act make himself a trespasser. We need not inquire to what extent the government—either federal or state—could give an

Digitized by Google

exclusive private right of fishery in such public waters. No such right is asserted here."

We are of opinion that the complaint did not state facts sufficient to constitute a cause of action, and that the demurrer should have been sustained. Decree reversed, with directions to the court below to sustain the demurrer and dismiss the complaint.

(161 Fed. 66.)

MISSOURI PAC. RY. CO. v. LARUSSI.

(Circuit Court of Appeals, Seventh Circuit. February 7, 1908. Rehearing Denied May 6, 1908.)

No. 1,420.

1. DEATH—STATUTORY RIGHT OF ACTION FOR WRONGFUL DEATH—ENFORCEMENT IN FEDERAL COURTS.

A right of action for wrongful death, accrued under a statute of one state, may be enforced in a federal court in another having jurisdiction of the parties, at least where such statute is not contrary to the public policy of the state in which the action is brought, without regard to any special rule or statute of such state either authorizing or inhibiting actions in the local courts on causes arising elsewhere.

[Ed. Note.—For cases in point, see Cent. Dig. vol. 15, Death, § 50.]

2. EXECUTORS AND ADMINISTRATORS—JURISDICTION TO APPOINT—DOMICILE OF DECEDENT.

A probate court, in appointing an administrator, is presumed to have been acting within its jurisdiction; and such presumption is not overcome by the fact that the decedent, shown to have resided in the state and county where the appointment was made for several years, was at the time of his death engaged on construction work on a railroad in another state, where he boarded and lodged during such work, or that an administrator was there appointed after his death.

3. MASTER AND SERVANT—INJURY TO SERVANT—PROOF OF NEGLIGENCE—EFFECT OF KANSAS EMPLOYER'S LIABILITY ACT.

Under the Kansas employer's liability act (Gen. St. Kan. 1889, § 1251), which as construed by the Supreme Court of the state relieves railroad employés, more or less exposed by their employment to the hazards of railroading, from the common-law rule of assumed risk from negligence of fellow servants, such an employé, injured or killed in a collision between trains while being carried by the company to or from his place of work as required under his contract of employment, stands in the same relation to the company as a passenger, and the happening of the collision is prima facie evidence of the company's negligence, and casts upon it the burden of proof.

[Ed. Note.—For cases in point, see Cent. Dig. vol. 34, Master and Servant, §§ 144–152, 894–906.]

4. DEATH—CONDITION PRECEDENT TO ACTION—NOTICE OF CLAIM.

The amendment of the Kansas employer's liability act, adopted in 1903, which provides that notice in writing of an injury sustained, "stating the time and place thereof, shall have been given by or on behalf of the person injured to such railroad company within 90 days after the occurrence of the accident," does not require that such notice should have been given by an administrator, suing for an injury which caused the death of his intestate, as a condition precedent to such action.

[Ed. Note.—For cases in point, see Cent. Dig. vol. 15, Death, § 13.]

Digitized by Google

In Error to the Circuit Court of the United States for the Eastern Division of the Northern District of Illinois.

For lower court opinions, see 155 Fed. 654.

The defendant in error, as administrator of the estate of Minanzio Arquilli, deceased, recovered judgment in suit against Missouri Pacific Railway Company, plaintiff in error, for damages for alleged negligence in causing the death of the intestate, and this writ of error is brought by the railway company to reverse such judgment. The injury and death occurred April 26, 1903, in Kansas, where the right of action, when death is so caused, was conferred by statute (paragraph 4518, Gen. St. Kan.; Taylor's 1889 Ed., c. 80, § 422), in conformity with the provisions of the so-called "Lord Campbell's Act"; and the suit was commenced in the United States Circuit Court for the Northern District of Illinois, upon averments of the citizenship therein of the defendant in error and his appointment by the probate court of Cook county, Ill., having jurisdiction thereof, as administrator of the estate of the deceased, and that the plaintiff in error was a Missouri corporation and citizen. The intestate, Arquilli, came to Chicago from Italy, about six years prior to his death, with his elder son, leaving his wife and four children in Italy, and making frequent remittances from Chicago, out of his earnings as a laborer, for support of his family. At the time of his death Arquilli was employed by the plaintiff in error as a laborer on trackwork in Kansas, and it is stipulated of record that he "was working, boarding, and lodging in Wilson county," where "some of his wearing apparel and ornaments of the person and earned and unpaid wages, not over $50, were kept, all of which were taken possession of by W. H. Lake, administrator appointed by the county court of Wilson county, Kansas." The deceased, with about 40 other laborers, was in a caboose on a work train which was carrying them, as arranged by the railway company from their place of work, at the close of the day, to their lodging place, running with the cars in front of the engine and the caboose at the head of the train. An engine hauling a freight train, running upon the single track in the opposite direction, struck and wrecked this caboose and killed Arquilli. The testimony as to the circumstances of the collision is that furnished on behalf of the plaintiff below in meager statement of the fact as above mentioned, with various estimates of the speed of both approaching trains and mention of the further fact that the engine of the freight train passed over the wreckage of the caboose. No testimony was offered on the part of the defendant below, by way of explanation or traverse. On an issue raised by the defendant below, by special plea, that Arquilli was a resident of Kansas, and not of Illinois, at the time of his death, the court instructed the jury to find against such plea; and thereupon the issue of liability under the evidence was submitted, and the jury returned a verdict in favor of the plaintiff, with damages assessed at $2,500.

Frank F. Reed, for plaintiff in error.

James Rosenthal, for defendant in error.

Before GROSSCUP, BAKER, and SEAMAN, Circuit Judges.

SEAMAN, Circuit Judge. The record in this case is comparatively brief, except in the assignment of errors, 51 in number. In the oral argument, however, all contentions for reversal were fairly embraced under four propositions, and reference to the various assignments in detail is not needful. We have considered all the questions raised, but confine the discussion to those advanced in the argument—with the third and fourth propositions grouped together—namely: (1) That the "action should have been dismissed because contrary to the public policy" of Illinois; (2) that it was error to instruct the jury to find in favor of the plaintiff upon the question (raised by

Digitized by Google

plea) of the intestate's residence; (3) that "no negligence of the defendant was established," either under the general rule applicable to such case of master and servant, or "within the terms of the Kansas fellow servant act."

1. The plaintiff recovered judgment for damages arising out of the injury and death of the intestate, in Kansas, caused by alleged negligence of the defendant in its operation of trains; and it is conceded, not only that the Kansas statute provided (in conformity with the Lord Campbell act) for recovery thereupon, but that like provision then existed in Illinois, as the law of the forum. Thus the alleged cause of action rests on the Kansas statute, and its creation thereunder is unquestionable, if the proof establishes actionable negligence. Objection is raised to its enforcement in the federal court, sitting in Illinois, upon the ground that the analogous statutory provision in Illinois above referred to (section 1, c. 70, 1 Starr & C. Ann. St. 1896; section 1, c. 70, Hurd's Rev. St. 1905) was qualified by an amendment of the succeeding section (section 2) in 1903—after the date of the injury and death in question—whereby the amount of damages recoverable was increased, and a proviso inserted "that no action shall be brought or prosecuted in this state to recover damages for a death occurring outside the state." Hurd's Rev. St. 1905, c. 70, § 2. The contention is, in substance, that this proviso amounts to departure from the original statutory policy of the state, so that the provisions for the cause of action, in Kansas and Illinois, respectively, are inconsistent or nonconcurrent, and that such cause of action arising in the one state is not enforceable in the other, even in the federal court—citing Texas & Pacific Railway Co. v. Cox, 145 U. S. 593, 604, 605, 12 Sup. Ct. 905, 36 L. Ed. 829; Northern Pacific R. R. v. Babcock, 154 U. S. 190, 198, 14 Sup. Ct. 978, 38 L. Ed. 958; Stewart v. Baltimore & Ohio R. R. Co., 168 U. S. 445, 448, 18 Sup. Ct. 105, 42 L. Ed. 537.

The amendment referred to is without force in the case at bar, as we believe, irrespective of the question whether its terms authorize the interpretation sought, to bar suit upon a pre-existing cause of action. The general doctrine is established, as applicable as well to this statutory cause of action, that a liability is enforceable in the federal forum, having jurisdiction of subject-matter and parties, whenever "a right of action has become fixed and a legal liability incurred," either under the common law or under a state statute not penal in its nature. Dennick v. Railroad Co., 103 U. S. 11, 18, 26 L. Ed. 439; 10 Notes U. S. Rep. 8; Huntington v. Attrill, 146 U. S. 657, 674, 13 Sup. Ct. 224, 36 L. Ed. 1123. As stated both in the Cox and the Babcock Cases, supra, cited by the plaintiff in error, this rule is one of general law and regarded as settled by the Dennick Case. Upon the death of the intestate, if caused as averred, the right of action accrued under the Kansas statute, and its enforcement in the trial court, in a suit there instituted, appears to be authorized under the above-mentioned doctrine, subject only to the jurisdictional requirements.

Whether such enforcement may be subjected to the further test mentioned in Texas & Pacific Railway Co. v. Cox, 145 U. S. 593,

Digitized by Google

605, 12 Sup. Ct. 905, 908, 36 L. Ed. 829—namely, that "the statute of the state in which the cause of action arose is not in substance inconsistent with the statutes or public policy of the state in which the right of action is sought to be enforced"—is a question not involved here for solution, as the terms of the statute in Illinois creating the cause of action are substantially identical with those of the Kansas statute. Both provide alike to remove the common-law bar and establish a cause of action for a tort (committed in the state) which causes death. The right of recovery in the case at bar rests alone on the statute of Kansas—is "governed by the lex loci, and not by the lex fori." Northern Pacific Railroad v. Babcock, 154 U. S. 190, 199, 14 Sup. Ct. 978, 981, 38 L. Ed. 958. As the law of Illinois concurs in this policy in creating the cause of action, the test referred to is met, if applicable; and whether the remedial provisions in Kansas and Illinois are alike or unlike is immaterial under either view. Stewart v. Baltimore & Ohio R. R. Co., 168 U. S. 445, 448, 18 Sup. Ct. 105, 42 L. Ed. 537. Assuming, therefore, that jurisdiction of the parties was acquired, cognizance in the trial court of the subject-matter was governed by the federal law, with rights to be administered in conformity with the rule of general jurisprudence as above stated, unaffected by any special rule or statute of Illinois, either authorizing or inhibiting suit in the local courts upon such causes of action arising outside the state, except such statute of limitation as may be applicable thereto. So the proviso incorporated in section 2 of the Illinois statute, in reference to a foreign cause of action, which leaves unmodified the rule and policy of the Lord Campbell act adopted in section 1, is inapplicable to the case at bar, as we believe, whether this concurrence with the Kansas statute in creating like cause of action is needful or immaterial. Nor is it necessary to ascertain whether a like rule prevails in Kansas and Illinois as to enforcement of foreign rights of action.

2. The plaintiff below was both a citizen of Illinois and administrator of the estate of the deceased under adjudication and appointment in the probate court of Cook county, Ill.; and his authority to sue is challenged by pleas averring that the deceased was not "a resident of or domiciled in the state of Illinois" and had no property or effects therein, and that he was a resident of Kansas at the time of his death, and an administrator of his estate had been appointed and qualified in Kansas on May 25, 1903. Support for this plea rests alone on the stipulated facts that Arquilli (deceased) was employed in trackwork, "was working, boarding, and lodging in Wilson county," where "some of his wearing apparel" and earnings were kept, and such belongings came into the possession of an administrator appointed in Kansas. It is undisputed, however, that he was theretofore living and working in Chicago for a considerable period, and made remittances from there to his wife in Italy; and his transfer to and presence in Kansas is fairly attributable to the engagement there as railroad laborer merely for the time being. The adjudication of the probate court of Cook county is presumptive of the existence of one or the other of the statutory grounds therefor, with either of which the Kansas facts relied upon are in no wise incon-

Digitized by Google

sistent, so that no evidence appears for impeachment of such proceedings in the probate court. We are of opinion that the trial court committed no error in its instruction to the jury accordingly.

3. The objection that actionable negligence was not established as the cause of death is urged under these contentions: (a) That the doctrine "res ipsa loquitur" is not applicable, because the intestate was not riding on the train in the relation of passenger, but as a servant of the company; (b) that the "Kansas fellow servant act" is not applicable to such case; and (c) that the plaintiff is not entitled to the benefits of such act, in any view, for want of notice of the injury, as required by an amendment in 1903.

The first-mentioned contention is untenable, as we believe, in the view in which it is pressed in the argument, namely, that the carrier is not liable for an injury to the servant thus riding to or from his work, without proof of negligence on the part of the carrier other than the mere fact of the collision of trains, although it be assumed that the statute of Kansas imposes liability for the negligence of fellow servants. Under the common-law rule of liability, the distinction is well settled by the authorities between the case of a passenger and that of a servant on the train, in the proof required to charge such liability for injury arising from collision or other accident, and that "the fact of an accident carries with it a presumption of negligence on the part of the carrier," in favor of the injured passenger, while no such presumption is raised in favor of the injured employé, who must prove affirmatively that the employer was negligent. This rule is distinctly recognized and stated as resting, in the one instance upon the breach of the contract to carry the passenger safely, and in the other upon the relation of master and servant, with its assumption by the latter of risk for negligence of fellow servants, the frequent cause of such happenings; hence the burden cast on the employé to prove negligence for which the master is chargeable in such case. Patton v. Texas & Pacific Railway Co., 179 U. S. 658, 663, 21 Sup. Ct. 275, 45 L. Ed. 361, and cases cited. Whether such rule of distinction is applicable to the case of an employé (as in the present instance), injured or killed by collision of trains, during his conveyance by the employer, pursuant to contract, from his place of work to a lodging place, in the absence of controlling statutory provisions, is a question not free from difficulty, in the light of the various authorities, but its solution is not deemed needful, in view of our conclusions upon the effect of the Kansas statutes referred to. If the employé thus in course of such conveyance under agreement with his employer, a common carrier, is relieved by the statute from the common-law rule of assumed risk for negligence of fellow servants in such service, no ground exists for the above-mentioned distinction, under that rule, between the obligation of the carrier to the employé thus carried and its obligation to the passenger under his contract for transportation. As stated in the early and leading case of Stokes v. Saltonstall, 13 Pet. (U. S.) 181, 191, 10 L. Ed. 115, and frequently approved (3 Notes U. S. Rep. 810), the undertaking for carriage is "that so far as human care and foresight can go he will transport them safely." The prima facie breach arising from the accident is

Digitized by Google

alike in both cases, and thus "the happening of an injurious accident" (as in a passenger case, Gleeson v. Virginia Midland R. Co., 140 U. S. 435, 443, 11 Sup. Ct. 859, 35 L. Ed. 458), is "prima facie evidence of negligence on the part of the carrier," and casts the burden of proof upon the carrier "to show that its whole duty was performed."

We are satisfied, therefore, that proof of the collision unexplained authorizes recovery for the death of an employé so riding on the train, unless the Kansas statute is without force under the circumstances. The statute known as the "Employer's Liability Act," adopted in Kansas in 1874 (section 1, c. 93, p. 143, Laws 1874; paragraph 1251, Taylor's 1889 Compilation of General Statutes), reads as follows:

"Every railroad company organized or doing business in this state shall be liable for all damages done to any employé of such company in consequence of any negligence of its agents, or by any mismanagement of its engineers or other employés to any person sustaining such damage."

This provision was upheld and construed, in Missouri Pac. Ry. Co. v. Haley, 25 Kan. 35, 53, to embrace "only those persons more or less exposed to the hazards of the business of railroading"; and it is plain that the employé in question was within such definition of service and exposure. The contention that he was not entitled to its benefits, because not engaged in the operation of the train, is without merit, under the denial of such distinction in Union Pac. Ry. Co. v. Harris, 33 Kan. 416, 418, 6 Pac. 571, and in subsequent decisions reviewed in Missouri, K. & T. Ry. Co. v. Medaris, 60 Kan. 151, 55 Pac. 875. While the last-mentioned decision is cited in support of the contention, it is applicable only for its recognition of the rule as above stated. Both facts and ruling are clearly distinguished in the opinion from the circumstances of the present case. In reference to the Iowa cases, cited as supporting the contention, it is sufficient to remark, as stated in Union Pac. Ry. Co. v. Harris, supra, that the statute construed in these recent decisions is materially changed from its original provision, adopted in Kansas, and the rulings thereunder furnish no aid for the construction sought here of the Kansas statute. We are impressed with no view which excludes the employé in question from the benefits of the act, either under its terms or in any interpretation by the Supreme Court of Kansas brought to our attention.

The remaining objection raised against such benefit is predicated on an amendment of this employer's liability act, adopted in 1903 (Laws 1903, p. 599, c. 393), in a proviso as follows:

"That notice in writing of the injury so sustained, stating the time and place thereof, shall have been given by or on behalf of the person injured to such railroad company within ninety days after the occurrence of the accident."

This proviso was adopted in March, to go into effect July 1, 1903, while the injury and death in question occurred April 26, 1903. Whether it would require notice to be given by a person injured prior to the date so fixed for the amendment to become operative needs no determination in the present case, under our view of its terms as inapplicable to recovery by representatives for an injury causing death. As notice cannot be given "by or on behalf" of the de-

Digitized by Google

ceased, and the representatives entitled to recover damages are not "the person injured," it is obvious that no provision is expressly made for notice in such cases. The purpose of the requirement in cases of alleged injury is well recognized—that timely notice be given to enable the party charged with negligence to investigate the facts, of which he may not otherwise be fairly advised—and the just inference is that notice of injuries causing death was not within the reasonable purpose and requirement of the proviso, and thus excluded from its terms. In any view of the requirement, however, the statute must be strictly construed, as no notice is needful at common law, and we are of opinion that the trial court rightly overruled the objections thereunder.

The judgment of the Circuit Court appears to be well supported and free from reversible error, and is affirmed.

(161 Fed. 72.)

GULF, C. & S. F. RY. CO. v. MOSELEY.

(Circuit Court of Appeals, Eighth Circuit. April 20, 1908.)

No. 2,541.

LIMITATION OF ACTIONS—TRESPASS—PERMANENT DIKES DEFLECTING CURRENT OF STREAM—ACTION FOR INJURY TO LAND—ACCRUAL.

Defendant railroad company built dikes along the bank of a river to prevent the current from washing away its roadbed. They were constructed by driving rows of large piles from five to seven feet into the earth, seven feet apart, planking between, and filling in with stone. The effect of such dikes was to deflect the current of the river against plaintiff's land on the opposite bank, portions of which were thereafter constantly being undermined and destroyed. *Held*, that the dikes were permanent structures, and that the damages for injury to plaintiff's land, both present and prospective, were recoverable in a single action, the right to bring which accrued at once when the dikes were completed and the injury commenced, and was barred in three years thereafter, under Mansf. Dig. Ark. § 4478 (Ind. T. Ann. St. 1899, § 2945), limiting the time for bringing actions for trespass upon lands.

[Ed. Note.—For cases in point, see Cent. Dig. vol. 33, Limitation of Actions, §§ 303-305.]

In Error to the United States Court of Appeals in the Indian Territory.

For opinion of the court below, see 98 S. W. 129.

S. T. Bledsoe, for plaintiff in error.

A. Eddleman and J. F. Sharp, for defendant in error.

Before SANBORN and ADAMS, Circuit Judges, and PHILIPS, District Judge.

PHILIPS, District Judge. The defendant in error (hereinafter designated the "plaintiff") in the United States Court for the Southern District of the Indian Territory recovered judgment against the plaintiff in error (hereinafter designated the "defendant") for damages to her land in the sum of $1,980, with interest at 6 per cent. from July 4, 1895, which judgment was affirmed by the Court of Ap-

Digitized by Google

peals of the Territory, to reverse which this writ of error is prosecuted.

In 1893 the plaintiff, under the homestead law, owned a tract of land of 137 acres, bordering on the east bank of the Canadian river, in Cleveland county, Oklahoma Territory. The defendant railroad company prior to 1893 had constructed its roadbed along the opposite west bank of said river on its right of way. The Canadian river, of varying width, at the point in question was perhaps one-half mile wide under high stage of water. The stream was somewhat treacherous in its flow, subject annually to high floods, which rendered its current, when veering to the bank, destructive to adjacent lands. The bank along the plaintiff's land, owing to the sandy soil formation, was quite susceptible to disintegration from the wash of the current; and owing to the low surface of the body of the land this condition existed throughout the tract, so that the caving in of large areas of the land was an apparent inevitable result when the current was sent against the east bank of the river. Prior to 1893 the normal flow of the current was toward and along the west shore line, opposite the plaintiff's land, with the result that it was constantly making inroads on the right of way of the defendant company, endangering its roadbed and tracks, until, as the defendant claims and the testimony tends to establish, it became necessary for the preservation of its roadbed to construct at the point in question a line of powerful dikes, with the view of throwing the current back to its wonted place as at the time of the construction of the road. The effect of these dikes, the plaintiff claims, was to so deflect the natural current of the river as to drive it forcibly against the opposite shore line, undermining and disintegrating the natural barrier of the bank protecting her land.

The petition avers that in September, 1893, about one month after the completion of the dikes, the current of the river so diverted washed away of the plaintiff's land about 5 acres, in 1894 about 10 acres, in 1895 about 75 acres, and in 1897 about 5 acres. This action was originally instituted on the 11th day of December, 1897, covering the damages sustained up to that time. On the 23d day of November, 1899, an amended petition was filed, claiming damages for the destruction of 5 acres of the land in 1898 and for damages to the remaining portion of the land. A demurrer to the petition having been overruled, the defendant answered, pleading, inter alia, the statute of limitations. The trial court denied the applicability of this defense. If in fact and law this plea was good, the discussion of other assignments of error is unnecessary. The statute of the state of Arkansas (section 4478, Mans. Dig. [Ind. T. Ann. St. 1899, § 2945]), applicable to the Indian Territory, declares that an action for trespass upon lands shall be brought within three years after cause of action accrues. As construed by the Supreme Court of Arkansas, the three-year period applies to an action for damages of this character. St. Louis, I. M. & S. Ry. Co. v. Morris, 35 Ark. 612.

The defendant's contention is that the dikes were permanent in construction, and under the allegations of the petition and the proofs the injuries to the plaintiff's freehold were obviously consequential,

Digitized by Google

and therefore the entire damages could have been recovered in one action, the cause for which arose as early as September, 1893, more than four years prior to the institution of suit, which was more than three years after the damage was done in 1894. The contention of the plaintiff is that the structure did not immediately involve the entire destruction of her estate, or its beneficial use, but the damages were apportionable from time to time, and therefore separate actions might be brought to recover damages for each successive injury as it occurred. That the structure of the dikes was permanent in character, and intended by the defendant to be so, hardly admits of debate. The evidence shows that the piles, at the large end, were from 14 inches to 2 feet in diameter, and were driven down into the earth from 5 to 7 feet, and were about 7 feet apart, with caps of heavy boards along the tops. These rows of dikes were boarded up with planks from 2 to 3 inches in thickness, and were filled in with smaller stones at the bottom, and on the top with stones so large that only three of them could be loaded onto a car, which was run out along the side of the dike, and the stones were lifted in place by derricks.

It may be true, in the abstract, that nothing constructed by the hand of man is indestructible. The razure of time and the process of erosion of the waters may wear away this structure. But in its relation to the practical affairs of human action, with which the law deals, this formidable, substantial work must be regarded as possessing in a high degree the quality of a permanent structure. The petition itself avers:

"That the natural and probable consequence of the erection of said dikes was to change the current and channel of said river, by turning the current over and against the east or left bank of said river and cutting and washing said bank away, and that they were built and maintained by the defendant for this purpose. * * * That the effect of said dikes was to, and they did, change the current of said river, and threw the same over and against the left or east bank of the same, and cut and washed the same away, and destroyed plaintiff's land, and changed the channel of said river, making the same much farther east than it ever was before the wrongful building of said dikes. That after and on account of the said building and maintaining of said dikes, at each successive rise in said river, the current was thrown over and upon plaintiff's land, and washed a portion of the same away, and destroyed it."

As if to aid this defense, the plaintiff's evidence was full and strong to the point that within the month succeeding the construction of the dikes the effect was to send the current of the river directly across to the east shore, where it began rapidly to eat away the bank, destroying 5 acres of the land, and in the following year 10 acres, and 1895 75 acres more. In the very nature of the situation, this deflection of the current to the east shore was constant—more destructive at intermittent periods of high water than at others. This characteristic of the river, its history shows, was as certain of manifestation as the coming of the seasons. The quality of the soil composing the ever-receding bank and the lay of the land rendered it so probable that this process of disintegration and work of destruction would proceed, unless arrested by human agency, as to have permitted a tangible estimation of the whole damage, within the admissibility of

Digitized by Google

the law, in a single action as early as September, 1893. Indeed, the plaintiff ought not to be heard to say that this ascertainment was too remote and speculative, for the reason that in this suit the trial court, under the evidence introduced by the plaintiff, permitted her to recover, not only damages for all the land hitherto destroyed by the alleged nuisance within the three years next preceding the institution of suit, but for the prospective damages to the remainder of her land yet left intact. Some of her witnesses testified that the residue of the land was rendered almost worthless, and that they would not pay the taxes thereon for its value.

It is to be conceded that there is much conflict in the decisions of courts touching the application of the statute of limitations to nuisances of this character. This conflict has arisen especially in reference to the erection of railroad embankments across creeks and swales, draining large areas of adjacent land without sufficient ditches or culverts to carry off the waters on occasions of freshets, whereby the land becomes flooded by overflows, damaging annual crops, and the like. In such case there is not infrequently present elements of uncertainty, such as the insufficiency of the openings in the embankments, which, the presumption may be indulged, the railroad might at any time in the future sufficiently enlarge, rather than submit in the first action to the recovery of all the consequential damages. In the second place, where the damage is to crops, it may depend entirely upon the possibility of the nonrecurrence of the overrunning flood in any given year, or the contingency of no crop being planted thereon, or being cultivated in a product subject to little damage from a temporary overflow. Such are not the conditions of the nuisance in question. The very purpose to be subserved by the defendant's permanent structure does not admit of any rearrangement to obviate sending the force of the current of the river against the plaintiff's shore line. Neither did the situation admit of the probability of the removal of the dikes in the future, as the burden of the defendant's proof was that they are indispensably necessary to prevent the destruction of its right of way, roadbed, and tracks. Moreover, the injury to the plaintiff did not consist in now and then flooding her land with water, damaging possible crops; but it was the destruction of the freehold by the constant eating away of the protecting bank—a process as certain to continue as the annual rainfalls and the flow of water in a large river, and a result reduced to a demonstration more than three years before this suit was instituted.

Gould, in his work on Waters (section 1416), speaking of permanent injury, says:

> "In such cases the rule is altered for the sake of convenience, and but one action is allowed. The plaintiff is required to recover in one suit the entire damages, present and prospective, caused by the defendant's act. Injuries caused by permanent structures infringing upon the plaintiff's rights in his land, such as railroad embankments, culverts, and bridges, permanent dams, and permanent pollutions of water, fall in this class."

Farnham, in his work on Waters and Water Courses (volume 2, § 586), discussing this question, says:

Digitized by Google

"The rule that every continuance of a nuisance is a fresh nuisance should have no application in case of permanent nuisances of this class, any more than it should be contended that a trespass upon the land and erection of a structure there should constitute a fresh trespass every moment it was continued, for the purpose of extending the time within which the action could be brought. And there are cases which have applied the true rule that, in case the dam is a permanent one, the limitation period will begin to run against the right of action to recover damages for the injuries from the time the dam was built. The rule that the statute of limitations is not available to defeat an action for damages for the flooding of land until the right to flood it has been acquired by prescription, since every continuance of the injury is a fresh nuisance, is a mere arbitrary rule, invented by the courts to meet the necessities of an apparently hard case. The difficulty seems to be that the courts have confounded two distinct rights of action. As was seen in a preceding section, it is held that ejectment will not lie to destroy an inchoate flowage easement. To avoid the effect of that ruling, the courts which apply the successive injury doctrine, in order to pervent the acquisition of an easement in real estate in less than the prescriptive period, hold that the nuisance is a continuing one, and that action may be brought at any time until the right to maintain it has been acquired by prescription. The latter holding seems illogical. If a permanent obstruction is erected, so that it casts water across the boundary line onto land of the upper owner, the injury is complete at the time the obstruction is erected and the injury done, and there is no ground for holding that a right of action for damages may be carried along for a period of 20 years, when the statute of limitations says that it shall be barred in 6 years."

This position is reinforced by Judge Brewer, in Central Branch of Union Pacific Railroad Co. v. Twine, 23 Kan. 586, 33 Am. Rep. 203.

As applied to the instance where the permanent structure is such as to injure the land itself of the adjacent proprietor, the Supreme Judicial Court of Massachusetts maintains that the whole injury, present and prospective, is recoverable in one action, maintainable immediately when the effect of the nuisance was first manifested. In Fowle v. N. H. & N. Co., 107 Mass. 352, the plaintiff sued to recover damages for injury to the freehold resulting from the construction of the defendant's railroad along the bank of Mill river and across the bed thereof. The construction was of earth and stone, so as to obstruct and deflect the flow and current of the river, driving it against the embankment of the plaintiff's land, whereby it was undermined, and large portions thereof were destroyed, whereby the value of the residue of the land was diminished. The defendant pleaded a former recovery for the first damage resulting from the destruction of the land, which occurred beyond the statutory period of limitations. Gray, J., said:

"The embankment of the defendants was a permanent structure, which, without any further act except keeping it in repair, must continue to turn the current of the river in such a manner as gradually to wash away the plaintiff's land. For this injury the plaintiff might recover in one action entire damages, not limited to those which had been actually suffered at the date of the writ. And the judgment in one such action is a bar to another like action between the parties for subsequent injuries from the same cause. Troy v. Cheshire Railroad Co., 23 N. H. 83, 55 Am. Dec. 177; Warner v. Bacon, 8 Gray (Mass.) 397, 402, 405, 69 Am. Dec. 253. This case is not like one of illegally flowing land by means of a milldam, where the damage is not caused by the mere existence of the dam itself, but by the height at which the water is retained by it, according to the manner of its use from time to

Digitized by Google

time, as in Staple v. Spring, 10 Mass. 72, and Hodges v. Hodges, 5 Metc. (Mass.) 205. Nor is it the case of an action against a grantee who, after notice to remove it, maintains a nuisance erected by his grantor, as in McDonough v. Gilman, 3 Allen (Mass.) 264, 80 Am. Dec. 72, and Nichols v. City of Boston, 98 Mass. 39, 93 Am. Dec. 132."

When the case went back for retrial, the plaintiff again sought to recover by some additional evidence. After adverting to the fact that in the first action for damages there was probably included in the recovery prospective damages, Judge Colt said:

"The case at bar is not to be treated strictly in this respect as an action for abatable nuisance. More accurately, it is an action against the defendant for the construction of public work under its charter in such a manner as to cause unnecessary damage for the want of reasonable care and skill in its construction for such a remedy. The remedy is at common law; and if it results from a cause which is either permanent in its character, or which is treated as permanent by the parties, it is proper that entire damages should be assessed with reference to past and possible future injuries."

This doctrine is supported by the following cases: Chicago & Alton Rd. Co. v. Maher, 91 Ill. 312; Van Schoick v. D. & R. Canal Co., 20 N. J. Law, 249; Van Orsdol v. B., C. R. & N. R. Co., 56 Iowa, 470, 9 N. W. 379; Henderson v. N. Y. Cen. Rd. Co., 78 N. Y. 423; Rock Land Water Co. v. Tillson, 69 Me. 255; Powers v. Council Bluffs, 45 Iowa, 654, 24 Am. Rep. 792; Railway Co. v. Loeb, 118 Ill. 214, 8 N. E. 460, 59 Am. Rep. 341.

The Supreme Court of Arkansas has applied the rule, under the statute of limitations, to the instance of permanent railroad embankments, whereby the natural waterflow is diverted so as to deluge, in times of freshets, adjacent lands. The pertinent decisions of that court are reviewed in St. Louis, I. M. & S. Ry. Co. v. Anderson et al., 62 Ark. 360, 35 S. W. 791. The plaintiff had constructed a drainage ditch on his lands. The defendant railroad company built a permanent embankment across it, and obstructed the outflow of water, whereby in times of freshets the plaintiff's lands were flooded and the value diminished. The court affirmed the proposition that:

"Whenever the nuisance is of a permanent character, and its construction and continuance are necessarily an injury, the damage is original, and may be at once fully compensated. In such case the statute of limitations begins to run upon the construction of the nuisance."

Further on the court said:

"In this case the obstruction of the ditch was permanent; that is, it will continue without change from any cause, except human labor. The effect of it was to restore the land drained to the condition in which it was before the ditch was dug. Its present and future effect upon the land could be ascertained with reasonable certainty. The damage was original, and susceptible of immediate estimation. No lapse of time was necessary to develop it. * * * As the law does not favor the multiplicity of suits, and all damages which will be sustained as a necessary result of the filling of the ditch in question and are recoverable could have been estimated at the time of such obstruction from the effect of it upon the value of the land, only one action should be brought therefor, and that within three years after the ditch was closed up."

The trial court, as in effect requested by the defendant, should have instructed the jury that the action is barred by the statute of limita-

Digitized by Google

tions. It results that the judgment of the Court of Appeals and of the United States Court for the Southern District of the Indian Territory must be reversed, and the cause remanded, with direction to grant a new trial, and for further proceeding in conformity with this opinion.

(161 Fed. 78.)

ARMOUR & CO. v. KOLLMEYER.

(Circuit Court of Appeals, Eighth Circuit. April 29, 1908.)

No. 2,694.

1. CONTINUANCE—DISCRETION—ABUSE OF DISCRETION ONLY REVIEWABLE.

The granting or refusing of a motion for a continuance is intrusted to the judicial discretion of the trial court, and it is an abuse of that discretion only that is fatal error.

[Ed. Note.—For cases in point, see Cent. Dig. vol. 10, Continuance, §§ 17, 18.]

2. SAME—CONTINUANCE OR ADMISSION OF STATEMENT OF TESTIMONY OF ABSENT WITNESS CONDITIONED BY DILIGENCE TO PROCURE IT—FACTS.

Proof of due diligence to procure the attendance or the testimony of an absent witness, and of facts which present reasonable grounds to believe that his attendance or evidence will be secured at the next term, is essential to the right of the moving party to a continuance or an admission of the statement of the witness' testimony as evidence.

Proof of reasonable, but futile, diligence to procure the attendance or testimony of a witness from March 20, 1906, until May 7, 1906, and from April 29, 1907, until May 3, 1907, without evidence of diligence between May 7, 1906, and April 29, 1907, is insufficient.

[Ed. Note.—For cases in point, see Cent. Dig. vol. 10, Continuance, §§ 74–93.]

3. DAMAGES—PERSONAL INJURIES—PROXIMATE CAUSE—IMPOSSIBILITY OF ANTICIPATION OF EXTENT OF INJURY NO BAR TO RECOVERY OF COMPENSATION FOR PROBABLE INJURY.

There was substantial evidence that the collision of two one-horse teams, induced by the negligence of defendant's driver, caused a fright of the plaintiff that produced an impairment of nervous power, weakness and suffering.

Held, inasmuch as the natural and probable effect of such a collision, which a person of reasonable prudence would have anticipated, was some fright, shock, and injury, the fact that the extent of it was indeterminate and impossible of anticipation was no bar to a recovery of compensation for the actual pecuniary loss caused by the negligence.

[Ed. Note.—For cases in point, see Cent. Dig. vol. 15, Damages, § 100.]

4. APPEAL AND ERROR—REVIEW—HARMLESS ERROR—CURING ERROR BY SUBSEQUENT INSTRUCTION—RULE—EXCEPTION.

The general rule is that, if inadmissible evidence has been received during a trial, the error of its admission is cured by its subsequent withdrawal before the trial closes and by an instruction to the jury to disregard it.

There is this exception to the rule: Where the evidence thus admitted is so impressive that in the opinion of the appellate court its effect is not removed from the minds of the jury by its subsequent withdrawal, or by an instruction of the court to disregard it, the judgment will be reversed on account of its admission, and a new trial will be granted.

[Ed. Note.—For cases in point, see Cent. Dig. vol. 3, Appeal and Error, §§ 4178–4184.]

Digitized by Google

5. TRIAL—REFUSAL OF INSTRUCTION CONTAINING A SOUND AND AN UNSOUND PROPOSITION NO ERROR.

Where a request for an instruction contains two or more propositions of law, one of which is unsound, there is no error in a refusal to grant it.

[Ed. Note.—For cases in point, see Cent. Dig. vol. 46, Trial, § 660.]

(Syllabus by the Court.)

In Error to the Circuit Court of the United States for the Eastern District of Missouri.

George B. Webster, for plaintiff in error.

W. R. Gentry (W. L. Bohnenkamp, on the brief), for defendant in error.

Before SANBORN and ADAMS, Circuit Judges, and PHILIPS, District Judge.

SANBORN, Circuit Judge. This writ challenges a judgment of $4,000 against Armour & Co., a corporation, for damages on account of personal injuries inflicted on Kollmeyer, the plaintiff below, by the alleged negligence of one of its drivers. Kollmeyer alleged in his pleading that, as he was driving in a one-horse spring wagon slowly south along the west side of Fourteenth street in St. Louis, Mo., the defendant's driver drove its one-horse meat wagon rapidly into collision with his wagon, raised one side of it so that there was reason to believe, and the plaintiff did believe, that there was imminent danger that it would be overturned, and would throw him into the street and injure him; that he thereupon jumped to the street, where he struck with great force, and by reason of the force and shock of the collision and of striking upon the street he was greatly shocked and injured. The defendant answered that it was guilty of no negligence, and that, if the plaintiff sustained any injury, it was caused by his negligence. There was substantial evidence of these facts in support of the verdict, although some of them were not established by uncontradicted evidence. Fourteenth street extends from north to south, and Biddle street crosses it at right angles. The plaintiff was a contractor, and he was walking his horse, attached to a light spring wagon loaded with a dozen sticks of lumber, 2x4, 16 feet long, south along the west side of Fourteenth street, near its intersection with Biddle street, with the intention to go east on Biddle street. The defendant's driver was driving rapidly a horse attached to a wagon loaded with 1,200 pounds of meat east along Biddle street behind a stake wagon, with the intention to go north on Fourteenth street. There is a descending grade on Biddle street from the west to its intersection of Fourteenth street. There was a shed 12 feet high, which extended along the west side of Fourteenth street north from Biddle street, and obstructed the view of the former street from Biddle street west of Fourteenth street. As the stake wagon arrived at the intersection of the line of the west curb of Fourteenth street with Biddle street, the defendant's driver guided his horse along the north side of this wagon around the corner into Biddle street, so that one of the shafts of the wagon struck the west side of the plaintiff's spring wagon, raised it a foot or 18 inches, the plaintiff slid toward the east, was afraid his wagon would be overturned

Digitized by Google

and that the defendant's team would run over him, and he jumped to the ground, a distance of about 4 feet. Before this collision he had been a healthy man, and had earned $6 per day. The shock of the collision and of his alighting upon the street produced traumatic neurasthenia, reduced his earning capacity about 50 per cent., caused him much suffering, considerable expense for medicines and medical service, and rendered it doubtful whether or not he would ever regain his former good health.

The case was called for trial on May 1, 1907, and the court denied a motion by the defendant to continue it upon the ground that its counsel was engaged in the trial of another case in another court. But that ruling will not be discussed, because the defendant was not prejudiced thereby, as its counsel was present throughout the trial, which was not commenced until May 3, 1907.

On the latter day the defendant made another motion to continue the case upon the ground that one Rombaugh, an important witness, was absent and could not be found. The defendant set forth in affidavits material testimony which the absent witness would give, if present, that a subpœna had been issued for him, and that diligent search and endeavor had been made to find him from April 29, 1907, until May 3, 1907. The fact also appeared, however, from evidence presented to the court, that the defendant had caused diligent search to be made for this witness from March 20, 1906, until May 7, 1906, had during that time caused subpœna to be issued for him and to be delivered to one Trimmer for service upon him, but that the witness had then moved from his former address and could not be found at that time. One of the errors specified is that the court below denied the motion for continuance based upon this showing, without requiring the plaintiff to admit that the witness would testify as stated in the moving affidavits. But the granting or refusing of a motion for continuance is intrusted to the judicial discretion of the trial court, and it is only when the record discloses an abuse of that discretion that an appellate court will reverse a judgment on account of its exercise. No such abuse appears from this record.

It is only when, in addition to the other requirements of section 685 of the Revised Statutes of Missouri of 1899, the moving party states facts in his affidavits which show the use of diligence to obtain the witness or his testimony, and facts which show reasonable grounds for belief that his attendance or his evidence will be procured at the next term, that a court is required by the statute and the practice to grant a motion for continuance, unless the opposing party will admit that the witness would testify as stated by the moving party, and that statement is received in evidence as his testimony. Rev. St. Mo. 1899, § 687. The defendant failed to comply with each of these requirements. The facts that it searched in vain for the absent witness from March 20, 1906, until May 7, 1906, and from April 29, 1907, until May 3, 1907, without any proof or statement that it made any effort either to find him or to serve him with a subpœna, or to take his deposition between May 7, 1906, and April 29, 1907, did not evidence due diligence to obtain him or his testimony, and did not fur-

Digitized by Google

nish reasonable grounds to believe that his attendance or his testimony would be procured at the next term of the court.

Counsel complain because the trial court refused to grant their request for a peremptory instruction in favor of the defendant. The evidence was conclusive that no break of any bone, no strain or tear of any muscle, no abrasion of the skin, and no external appearance upon the person of the plaintiff of any injury resulted from the collision or the jump. But there was substantial evidence that the collision and the jump caused fright and neurasthenia and a reduction of nervous power, which impaired the plaintiff's earning capacity and resulted in undue fatigue on slight exertion, in pain, in expense, and in a condition which rendered it doubtful whether or not he would ever recover his former health. There was substantial evidence that the fright was the real cause of the neurasthenia and its accompanying ills, and that it was impossible to separate the injury caused by the jump and by the alighting upon the street from the injury caused by the collision and the accident.

Counsel argue that the defendant was not liable for any damages in this case:

(1) Because the serious injury caused by the fright was not the natural or probable effect of the gentle collision which the defendant caused, and the defendant could not have anticipated such an injury. But the natural and probable result, the effect which a person of reasonable foresight would have anticipated from carelessly driving a horse and wagon loaded with 1,200 pounds of meat against the side of a light spring wagon loaded with pieces of 2x4's with such force as to raise one side of it a foot or 18 inches from the ground, was some fear of injury, some fright, some shock of the nervous system of the driver of the spring wagon, and its resulting injury, and the fact that the extent of the resulting injury was in its nature indeterminate and impossible of anticipation constituted no bar to a recovery of compensation for the actual pecuniary loss caused by the negligent act.

(2) Because the sole cause of the collision and the injury was fast driving, and the court below charged, and counsel insists, that fast driving is not of itself negligence; but, conceding the latter proposition, the conclusion does not follow that fast driving is never negligence under any circumstances. It may be the exercise of reasonable care to drive rapidly in the daytime along the public street, when the driver can see that the course he intends to pursue is unobstructed, and all other persons on the street can see where and in what way the driver intends to go; but it is not the exercise of reasonable care to drive rapidly along a public street in darkness, at a time when the driver knows that many other persons will probably be moving upon and across the street, or to drive so rapidly sharply around the corner of two public streets of a city that the driver cannot prevent collision with teams or pedestrians that are lawfully using the street upon which he enters. The defendant's driver was taking his team along Biddle street at a rapid gait. He knew that he intended to take it into Fourteenth street, and the plaintiff was ignorant of that purpose. He knew that his wagon was loaded, and that he could not stop his rapidly moving horse as quickly as he could have done if it had been with-

Digitized by Google

out a load. He knew that the shed on the corner obstructed his vision, so that he could not see from Biddle street what there was upon Fourteenth around the corner. In this state of the case the law imposed upon him the duty to exercise reasonable care to take his team into Fourteenth street at such a speed and at such a place that he could avoid a collision with and injury to all who were lawfully using the latter street. He might have exercised the requisite degree of care by driving along on Biddle street until he could see up Fourteenth street, and by then steering clear of plaintiff and others upon it. He might have exercised due care by sharply rounding the first corner with his team under such control that he could prevent it from colliding with unseen vehicles upon Fourteenth street. He pursued neither course. He blindly drove his horse so rapidly and sharply around the first corner that he could not avoid a collision with the plaintiff, who was driving slowly down Fourteenth street on the right side of the street, and he thereby failed to exercise reasonable care, although fast driving of itself may not be negligence.

(3) Because there was a fatal variance between the plaintiff's pleading and his proof, in that he counted upon physical injuries resulting from his jump and his alighting upon the street, and his only proof was of mental injuries caused by his fright. But the complaint contained averments that the collision was caused by the negligence of the defendant's driver; that it raised one side of the plaintiff's wagon, and caused him to believe, and would have caused a person of reasonable prudence in his situation to believe, that there was imminent danger that he would be thrown out and would be caused great bodily injury; that to escape such injury he jumped; that he struck the street "with great force and violence, and by reason of the force and shock of the collision of said wagons, and by reason of striking the street with such force and violence, plaintiff was greatly shocked and injured, and was injured in his back and spine, and his whole nervous system was permanently shocked, and he was made sick, sore, and weak, and caused to suffer great pain in his arms and limbs, and suffered great loss of sleep and severe spells of nervousness." The plaintiff sued for both the physical injuries caused by his jump and the mental injuries caused by the shock and consequent fright that the collision and the jump produced, and no more conclusive demonstration of that fact and no more complete answer to the defendant's claim of variance between the pleading and the proof could be made than the above quotation from the complaint and the statement of the evidence which has been made.

It is assigned as error that the court permitted the plaintiff and one of his witnesses to testify that the collision caused him to lose sexual power. In answer to a question by his counsel the plaintiff testified without objection that since the accident his sexual power was pretty nearly all gone. Defendant's counsel immediately moved to strike out the answer, because "not a matter of damages and not pleaded," and the court denied the motion. One of the plaintiff's witnesses, a physician, subsequently testified that the loss of sexual power is one of the symptoms of neurasthenia, and that upon a rational examination he discovered that was verified by the conditions in the

Digitized by Google

present case. At the close of the direct examination of the latter witness the plaintiff asked to amend his complaint by interlining an averment of the impairment of sexual power, and the court refused permission. The plaintiff then moved to strike out the evidence upon that subject, the court granted the motion, and the defendant excepted. At the close of the trial the court instructed the jury to disregard any evidence tending to show the loss by the plaintiff of sexual power. Conceding, but not deciding, that the evidence stricken out was inadmissible, how are the rulings which have been recited reversible error? The general rule is that, if inadmissible evidence has been received during a trial, the error of its admission is cured by its subsequent withdrawal before the trial closes, or by an instruction to the jury to disregard it. Pennsylvania Co. v. Roy, 102 U. S. 451, 26 L. Ed. 141; Specht v. Howard, 16 Wall. 564, 21 L. Ed. 348; Union Pacific R. Co. v. Thomas, 152 Fed. 365, 371, 81 C. C. A. 491.

There is this exception to the rule. Where the evidence thus admitted is so impressive that in the opinion of the appellate court its effect is not removed from the minds of the jury by its subsequent withdrawal, or by the instruction of the court to disregard it, the judgment will be reversed on account of its erroneous admission, and a new trial will be granted. Waldron v. Waldron, 156 U. S. 361, 381, 383, 15 Sup. Ct. 383, 39 L. Ed. 453; Throckmorton v. Holt, 180 U. S. 552, 567, 21 Sup. Ct. 474, 45 L. Ed. 663. There are two reasons why there was no reversible error in the rulings of the court under consideration:

In the first place, the fact of the plaintiff's impairment of power was proved, and was lodged in the minds of the jurors, in the absence of any error of the court. It was put in evidence in answer to a question which clearly disclosed the subject-matter, in the absence of any objection by the defendant. Thus the evil effect upon the minds of the jurors of the proof of the fact was wrought without any error of the court. It is true that immediately after the question was answered counsel for the defendant moved to strike the answer out, and the court denied the motion; but after another witness had testified to the fact, and before the case went to the jury, and before the plaintiff rested his case, the court struck out all evidence on this subject and instructed the jury to disregard it. The error of the court, if any, was not that it received the evidence, but that after the evidence had been received without objection it did not strike it out as soon as it should have done.

In the second place, the case falls under the rule, rather than under the exception. The objectionable evidence was withdrawn by the plaintiff himself, and the court told the jury to disregard it before the plaintiff rested. It was not before the jury when the case was argued to them, and at the close of the argument the court again instructed them to disregard it. The other evidence of injury in the case was sufficient to sustain the verdict for the amount of damages which the jury found. The jury could not have misunderstood the repeated instruction of the court to disregard the testimony here challenged, and the presumption is that they faithfully discharged their duty. Inasmuch as the fact challenged was lodged in the minds of the jurors in the absence of error, and the counsel who introduced it and the court

Digitized by Google

respectively requested and instructed the jury to disregard it, their erroneous delay of a few hours during the trial in the discharge of this duty was cured, and the case fell under the general rule, and not under the exception.

It is specified as error that the court refused to give to the jury the following instruction, which was requested by the defendant:

"The court further instructs the jury that the fact that the driver of defendant's wagon may have been on the left side of the street when the collision is alleged to have occurred is no evidence in itself of negligence on the part of such driver. The 'law of the road,' so called, that a driver must keep to the right, does not apply when one is crossing or turning into the street, or where the parties are driving in opposite directions and about to meet at the intersection of two streets. A disregard of this rule will not render the defendant liable in case of collision, if the plaintiff himself could have avoided the collision by the exercise of ordinary care on his part; and the mere fact that he was driving slowly at the time when the collision is said to have occurred (if such fact of slow driving has been proven) is no proof in itself that the plaintiff was in the exercise of due care upon his part."

Conceding, but not deciding, that this instruction correctly states the law of the road, its last clause was unsound, inapplicable to the facts of this case, and misleading. The plaintiff was approaching the intersection of two streets. He intended to take his team, which he was driving slowly along on the right side of Fourteenth street, east on Biddle street. He knew or anticipated that there were, or would be, other teams on the latter street. The requested instruction was that the fact that he was driving slowly at the time when the collision occurred was no proof in itself that he was exercising due care. His slow driving may not have been conclusive proof of due care; but was it not some proof, some evidence, of it? Even if the fact were conceded that slow driving is in itself no proof of reasonable care, are there not times when, places where, and circumstances under which, it is some proof, some evidence, of due care? The instruction is limited to the time, and hence to the place and the circumstances, of the collision. Was not the fact that, as the plaintiff was approaching on the right side of his street, and was close to the crossing of Fourteenth street by Biddle street, into which he intended to turn, he was driving his horse so slowly that he could control his speed and prevent his team from running against or upon another, some proof, some evidence, of the exercise of due care on his part? These questions must be answered in the affirmative, and for that reason, and because the last clause of the requested instruction suggests that proof of the plaintiff's reasonable care was essential to his case, when it was not, and the burden was on the defendant to prove his causal negligence, if any, this part of the instruction did not state the rule of law applicable to this case, and there was no error in the refusal of the court to give the entire instruction.

Where a request for an instruction contains two or more propositions of law, one of which is unsound, there is no error in a refusal to grant it. United States v. Hough, 103 U. S. 71, 72, 73, 26 L. Ed. 305; Chicago Great Western Ry. Co. v. Roddy, 65 C. C. A. 470, 476, 131 Fed. 712, 718; Monarch Cycle Mfg. Co. v. Royer Wheel Co., 44 C. C. A. 523, 526, 105 Fed. 324, 328.

Digitized by Google

There were other specifications of error; but they were leveled at refusals to grant requests for instructions which, so far as they were warranted by the law, were given in legal effect in the charge of the court, or at rulings which were not erroneous for reasons which have been given in the discussion of the specific objections which have been reviewed.

There was no error of law in the trial of this case, and the judgment below must be affirmed.

It is so ordered.

(161 Fed. 85.)

UNITED STATES v. CLEAGE.

(Circuit Court of Appeals, Eighth Circuit. March 12, 1908.)

No. 2,560.

1. COURTS—TRIAL TO DISTRICT COURT WITHOUT A JURY—REVIEW.
Where a cause in a District Court, which is triable by jury under Rev. St. § 566 (U. S. Comp. St. 1901, p. 461), is by consent of the parties tried to the court without a jury, no question of fact or law decided upon or in connection with the trial is subject to re-examination in an appellate court.

2. SAME—REV. ST. §§ 649, 700, HAVE NO APPLICATION TO THE DISTRICT COURTS.
Rev. St. §§ 649, 700 (U. S. Comp. St. 1901, pp. 525, 570), which provide for waiving a jury and for the review of judgments rendered in causes where there is such a waiver, relate exclusively to trials in the Circuit Courts, and there are no similar provisions in respect of trials in the District Courts.

3. WRIT OF ERROR—CASE SUBMITTED UPON AGREED STATEMENT—REVIEW.
Where, in a cause otherwise triable by jury, the parties agree upon a statement of the ultimate facts, and not the evidence of them, and the case is then submitted to the court without a jury for its decision of the questions of law arising upon the facts so stated, the judgment may be reviewed upon a writ of error; and this, because there the facts are not determined upon a trial by the court, but by the agreed statement, which is spread at large upon the record, as a part of it, as would be a special verdict.

[Ed. Note.—For cases in point, see Cent. Dig. vol. 3, Appeal and Error, § 3365.]

4. TRIAL—TRIAL TO COURT—CHARACTER OF FINDING—CANNOT BE BOTH GENERAL AND SPECIAL.
When the trial is to the court, under Rev. St. § 649 (U. S. Comp. St. 1901, p. 525), the finding may be either general or special, but not both, and, where a general finding is made and judgment is rendered thereon, it cannot be regarded as superseded by a supposed special finding, which was not entered of record, is only found in the bill of exceptions, and does not purport to qualify or take the place of the general finding.

[Ed. Note.—For cases in point, see Cent. Dig. vol. 46, Trial, § 929.]

(Syllabus by the Court.)

In Error to the District Court of the United States for the Eastern District of Missouri.

Edward P. Johnson, Asst. U. S. Atty. (Henry W. Blodgett, U. S. Atty., on the brief).

Before VAN DEVANTER and ADAMS, Circuit Judges, and RINER, District Judge.

Digitized by Google

VAN DEVANTER, Circuit Judge. By an action begun in the District Court the United States sought to recover from Thomas Cleage certain taxes alleged to have accrued under Schedule A of the war revenue acts of June 13, 1898 (30 Stat. 448, 458, c. 448) and March 2, 1901 (31 Stat. 938, 942, c. 806 [U. S. Comp. St. 1901, pp. 2286, 2300]). The petition was in two counts, and its allegations were all put in issue by the answer. By consent of the parties the trial was to the court without a jury. It resulted in a general finding for the defendant on the first count, and for the plaintiff on the second, and judgment was entered accordingly. Afterwards a bill of exceptions was allowed and signed, setting forth all the testimony and other evidence, and also what is termed a special finding of the facts. No order was made vacating the general finding or substituting the special one in its place. The case is here upon a writ of error sued out by the plaintiff with the purpose of securing a re-examination of the questions of fact relating to the first count and of certain questions of law said to arise upon so much of the special finding as relates to that count. None of these questions, however, is open to consideration by us.

Save in certain excepted causes, of which this is not one, section 566 of the Revised Statutes (U. S. Comp. St. 1901, p. 461) prescribes that the trial of issues of fact in the district courts shall be by jury; and, when this mode of trial is waived in those courts, in a cause not of the excepted class, there is no provision of law for the re-examination in an appellate court of any question of fact or law decided upon or in connection with the trial. In these respects the law applicable to the district courts and to the review of their judgments is to-day precisely the same as was the law applicable to the Circuit Courts and to the review of their judgments before the enactment of the statute now embodied in sections 649 and 700 of the Revised Statutes (U. S. Comp. St. 1901, pp. 525, 570). Prior to that statute, the Supreme Court held in Campbell v. Boyreau, 21 How. 223, 16 L. Ed. 96, a case tried in a Circuit Court and otherwise much like this, that none of the questions sought to be presented, whether of fact or law, could be re-examined upon a writ of error, and, to show the grounds upon which the decision proceeded, it was said:

"Indeed, under the acts of Congress establishing and organizing the courts of the United States, it is clear that the decision could not be otherwise; for, so far as questions of law are concerned, they are regulated in their modes of proceeding according to the rules and principles of the common law, with the single exception of the courts in the state of Louisiana, of which we shall presently speak. And by the established and familiar rules and principles which govern common-law proceedings no question of the law can be reviewed and re-examined in an appellate court upon writ of error (except only where it arises upon the process, pleadings, or judgment, in the cause), unless the facts are found by a jury by a general or special verdict, or are admitted by the parties, upon a case stated in the nature of a special verdict stating the facts, and referring the questions of law to the court.

"The finding of issues in fact by the court upon the evidence is altogether unknown to a common-law court, and cannot be recognized as a judicial act. Such questions are exclusively within the province of the jury; and if, by agreement of parties, the questions of fact in dispute are submitted for decision to the judge upon the evidence, he does not exercise judicial authority in deciding, but acts rather in the character of an arbitrator. And this court,

Digitized by Google

therefore, cannot regard the facts so found as judicially determined in the court below, nor examine the questions of law, as if those facts had been conclusively determined by a jury or settled by the admission of the parties. Nor can any exception be taken to an opinion of the court upon the admission or rejection of testimony, or upon any other question of law which may grow out of the evidence, unless a jury was actually impaneled and the exception reserved while they were still at the bar. The statute which gives the exception in a trial at common law gives it only in such cases. And, as this court cannot regard the facts found by the judge as having been judicially determined in the court below, there are no facts before us upon which questions of law may legally and judicially have arisen in the inferior court, and no questions, therefore, open to our revision as an appellate tribunal. Consequently, as the Circuit Court had jurisdiction of the subject-matter and the parties, and there is no question of law or fact open to our re-examination, its judgment must be presumed to be right, and on that ground only affirmed."

That decision was uniformly followed and applied by the Circuit Courts in the exercise of their appellate jurisdiction under section 633 of the Revised Statutes now repealed, over the judgments of District Courts (Blair v. Allen, 3 Dill. 101, Fed. Cas. No. 1,483; Wear v. Mayer [C. C.] 2 McCrary, 172, 6 Fed. 658; Town of Lyons v. Lyons National Bank [C. C.] 8 Fed. 369; Doty v. Jewett [C. C.] 19 Fed. 337; Jackson v. United States [C. C.] 21 Fed. 35); and it was reaffirmed and applied by the Supreme Court in Rogers v. United States, 141 U. S. 548, 554, 12 Sup. Ct. 91, 35 L. Ed. 853, a case tried in a District Court, wherein it was also held that sections 649 and 700, supra, relate exclusively to trials in the circuit courts, when a jury is waived, and that there are no similar provisions in respect of like trials in the District Courts.

It should be observed, however, that these cases do not impinge upon, but expressly recognize, another rule, equally well established, which is that where, in a cause otherwise triable by jury, the parties agree upon a statement of the ultimate facts, and not the evidence of them, and the cause is then submitted to the court, without a jury, for its decision of the questions of law arising upon the facts so stated, the judgment may be reviewed upon a writ of error; and this, because there the facts are not determined upon a trial by the court, but by the agreed statement, which is spread at large upon the record, as part of it, as would be a special verdict. United States v. Eliason, 16 Pet. 291, 301, 10 L. Ed. 968; Stimpson v. Railroad Co., 10 How. 329, 346, 13 L. Ed. 441; Graham v. Bayne, 18 How. 60, 15 L. Ed. 265; Suydam v. Williamson, 20 How. 427, 434, 15 L. Ed. 978; Burr v. Des Moines Railroad Co., 1 Wall. 99, 102, 17 L. Ed. 561; Pomeroy v. State Bank of Indiana, 1 Wall. 592, 602, 17 L. Ed. 638.

What has been said requires that the judgment be affirmed, but the result would be the same, even if, as seems to have been supposed, sections 649 and 700, supra, did not relate exclusively to trials in the circuit courts. Those sections do not provide for the re-examination of questions of fact, but only of questions of law; and the only questions of the latter class sought to be presented here relate to the sufficiency of the supposed special finding to support the judgment. That finding must be disregarded. Section 649 provides that the finding "may be either general or special," but it does not authorize both. British Queen Mining Co. v. Baker Silver Mining Co., 139 U. S. 222,

Digitized by Google

11 Sup. Ct. 523, 35 L. Ed. 147; State National Bank v. Smith, 36 C. C. A. 412, 94 Fed. 605; Corliss v. County of Pulaski, 53 C. C. A. 567, 116 Fed. 289; Streeter v. Sanitary District of Chicago, 66 C. C. A. 190, 133 Fed. 124. Here there was a general finding, and the judgment was rendered on it. The supposed special finding was not entered on the record, is only found in the bill of exceptions, and even then does not purport to qualify or take the place of the general finding. The latter is therefore controlling. Corliss v. County of Pulaski; Streeter v. Sanitary District of Chicago, supra.

The judgment is affirmed.

(161 Fed. 88.)

KRAKOWSKI v. UNITED STATES.

(Circuit Court of Appeals, Second Circuit. March 10, 1908.)

No. 140.

COUNTERFEITING—HAVING IN POSSESSION PAPER ADAPTED TO THE MAKING OF GOVERNMENT SECURITIES—STATUTE CONSTRUED.

The provision of Rev. St. § 5430 (U. S. Comp. St. 1901, p. 3671), making it a criminal offense for any person to have or retain in his control or possession "after a distinctive paper has been adopted by the Secretary of the Treasury for the obligations and other securities of the United States any similar paper adapted to the making of any such obligation or other security, except under the authority of the Secretary of the Treasury or some other proper officer of the United States," includes the having in possession without authority of the distinctive paper itself and of similar paper adapted to the making of government obligations and securities; and it is not sufficient to warrant a conviction thereunder to prove that defendant has in possession paper which might be used to make counterfeit obligations or securities.

In Error to the Circuit Court of the United States for the Southern District of New York.

Writ of error to review a judgment of the Circuit Court, entered upon a verdict finding the plaintiff in error (defendant below) guilty of a violation of section 5430 of the Revised Statutes (U. S. Comp. St. 1901, p. 3671) of the United States.

Thomas & Oppenheimer (Leo Oppenheimer, of counsel), for plaintiff in error.

Henry L. Stimson, U. S. Atty., G. H. Dorr and Francis W. Bird, Asst. U. S. Attys.

Before LACOMBE, WARD, and NOYES, Circuit Judges.

NOYES, Circuit Judge. The statute under which the indictment in this cause is framed provides that:

"Every person * * * who has or retains in his control or possession, after a distinctive paper has been adopted by the Secretary of the Treasury for the obligations and other securities of the United States, any similar paper adapted to the making of any such obligation or other security, except under the authority of the Secretary of the Treasury, or some other proper officer of the United States, shall be punished," etc.

The indictment follows the language of the statute in stating the offense charged. It alleges that the Secretary of the Treasury had

Digitized by Google

adopted a distinctive paper for the obligations and other securities of the United States, and that the paper which the defendant had in his possession was "adapted to the making of such obligations and other securities aforesaid." Upon the trial the defendant requested the court to charge that it was necessary to show that the paper in question was adapted to the making of the obligations of the United States. The court refused to so charge, and charged as follows:

"When the statute says any similar paper adapted to the making of such obligations or other securities, contemplating the unauthorized making, the words 'adapted to the making of such obligations' would refer to being adapted to the purpose of making an unlawful or counterfeit obligation."

The charge was erroneous. It stated an offense not charged against the defendant. He was indicted for having in his possession paper adapted to the making of the obligations "aforesaid," which were the obligations of the United States. He was not indicted for having paper adapted to the making of unlawful securities. Counterfeit money is not an obligation of the United States.

The charge also involved a wrong construction of the statute. The statute contemplates the adoption by the Secretary of the Treasury of a distinctive paper for government obligations, and provides that it shall be unlawful, without authority from the Secretary or other proper official, to possess any paper similar to the distinctive paper and likewise adapted to the making of government securities. A paper which resembles the distinctive paper and also is of such character as to be suitable for the imprint of government obligations comes precisely within the terms of the statute.

We think, moreover, that the statute is broad enough to include the "distinctive paper" itself. In fact, it would seem that the primary object of the statute was to prevent persons from having in their possession, without authority, the distinctive government paper. It is of the same general nature and for the same purposes as the English statute (St. 24 & 25 Vict. c. 98, § 11), which provides that:

"Whosoever, without lawful authority or excuse * * * shall purchase or receive, or knowingly have in his custody or possession, any paper manufactured and provided by or under the direction of the * * * Commissioners of Her Majesty's Treasury, for the purpose of being used," etc., "shall be guilty," etc.

The designated paper is manifestly adapted to the making of the obligations and securities of the United States. It is "similar" to itself within the primary meaning of that term given by Webster: "exactly alike." And, even if the word were not given its ordinary meaning, we should prefer that result to the one which would leave out of the operation of the statute the very paper which apparently it was primarily designated to protect. Any uncertainty in the language of the statute undoubtedly arises from the desire of Congress to prohibit in one provision both the unauthorized possession of government paper and of a similar paper which could be used for printing government securities. The words "adapted to the making of such obligations" clearly refer to the obligations of the United States just before mentioned in the statute. There is no room for reading anything else into the statute and no basis for doing so. Nothing

Digitized by Google

indicates that Congress had in mind the possession of the many kinds of paper adapted to the making of counterfeit money, especially poor counterfeits. Moreover, the provision of the statute making the possession of the paper unlawful "except under the authority of the Secretary of the Treasury or some other proper officer" necessarily implies that some persons may be authorized to have it in their possession. And, while the Secretary might properly authorize certain manufacturers to have in their possession the government paper or paper similar and adapted to making government obligations, an official authorization of the possession of paper suitable for counterfeiting would be unique in character.

Judgment reversed, and cause remanded for a new trial.

(161 Fed. 90.)

McCOACH, Internal Revenue Collector, v. BAMBERGER et al.

(Circuit Court of Appeals, Third Circuit. March 9, 1908.)

No. 9.

INTERNAL REVENUE—LEGACY TAXES—EFFECT OF REPEAL OF STATUTE.

Legacy taxes under War Revenue Act June 13, 1898, c. 448, §§ 29, 30, 30 Stat. 464, 465, as amended by Act March 2, 1901, c. 806, §§ 10, 11, 31 Stat. 946, 948 (U. S. Comp. St. 1901, pp. 2307, 2308), which were made due and payable one year after the death of the testator, are not collectible on the estates of persons who died within one year prior to July 1, 1902, at which time the repeal of said section 29 took effect (Act April 12, 1902, c. 500, § 7, 32 Stat. 97 [U. S. Comp. St. Supp. 1907, p. 649]).

In Error to the Circuit Court of the United States for the Eastern District of Pennsylvania.

Jasper Yeates Brinton and J. Whitaker Thompson, for plaintiff in error.

Wm. Jay Turner, for defendants in error.

Before DALLAS, GRAY, and BUFFINGTON, Circuit Judges.

PER CURIAM. Counsel for both parties agreeing that the only question sought to be raised in this case is that which was presented in the cases of McCoach v. Trust Co. and McCoach v. Norris, 142 Fed. 120, 73 C. C. A. 610, we need only say that, as there has not in the meantime been any contrary decision of that question by the Supreme Court, we adhere to the position taken by us in the cases referred to, and accordingly the judgment in the present case is affirmed.

Digitized by Google

(161 Fed. 91.)

DEVELOPMENT CO. OF AMERICA v. KING.

(Circuit Court of Appeals, Second Circuit. April 14, 1908.)

No. 196.

1. MASTER AND SERVANT—CONTRACT OF EMPLOYMENT—IMPLIED CONDITIONS.
   There is an implied, if not an expressed, condition in a contract of employment that it was made with some regard to the known capabilities of the employé, and such condition is to be taken into consideration in determining whether or not a service required of him is reasonable.

2. SAME—GROUNDS FOR DISCHARGE OF SERVANT—REFUSAL TO OBEY ORDER OF MASTER.
   The refusal of a servant to obey an order of the master does not afford legal ground for his discharge unless such order was reasonable, and that question is one of fact for the jury, although the contract is in writing and requires him to perform such services as the master may direct, and the order is also in writing.
   [Ed. Note.—For cases in point, see Cent. Dig. vol. 34, Master and Servant, §§ 30–38.]

3. SAME.
   A servant is bound to obey all lawful and reasonable orders of the master, and the motive of the master in giving such orders is immaterial.
   [Ed. Note.—For cases in point, see Cent. Dig. vol. 34, Master and Servant, §§ 30–38.]

In Error to the Circuit Court of the United States for the Southern District of New York.

Writ of error to review a judgment of the Circuit Court, entered upon the verdict of a jury in favor of the defendant in error, who was the plaintiff below. In the opinion following the parties are designated as in the court below.

Lester, Graves & Miles (H. S. Graves and Charles S. Yawger, of counsel), for plaintiff in error.

Putney, Twombly & Putney (Henry B. Twombly and Louis H. Hall, of counsel), for defendant in error.

Before LACOMBE, WARD, and NOYES, Circuit Judges.

NOYES, Circuit Judge. This was an action to recover damages for an alleged breach of a contract of employment between the defendant and one Brainerd Rorison, who assigned his claim to the plaintiff.

These facts were not disputed upon the trial: Prior to June, 1901, Rorison had been the president of the defendant company. At that time he resigned his office and entered its employment under a written contract providing that he should "devote his entire time, service, and energy, in good faith and to the exclusion of all other employment, to the service of this company and to the performance of such labors as the board of directors, its officers of executive committee, may direct," for the term of three years at the salary of $6,000 per year. For about two months Rorison rendered services under the contract at New York—where the defendant's offices were located—and then received a leave of absence without pay which continued until July, 1902, when he reported for duty. In response to his re-

Digitized by Google

quest that work should be assigned to him the defendant sent him an extended communication—the letter of July 22, 1902—directing him to proceed to a remote part of Mexico and to make an investigation of, and reports concerning lands which had been recently purchased by the defendant there. Rorison refused to obey this order upon the ground that it was unreasonable. He was thereupon discharged from his employment by the defendant, and brought this action upon the theory of a breach of contract by wrongful discharge.

Upon the trial the question of primary importance was whether the order was a reasonable one. Only in case it were reasonable did refusal to obey constitute good ground for dismissal. The trial court submitted the question whether the order was a reasonable one to the jury. The defendant assigns this action as error, and urges that the question of the reasonableness of the order was for the court to determine as a matter of law upon undisputed facts. This contention is evidently based upon the theory that, because the contract provided that Rorison should perform such labor as the defendant's officers might direct, he was bound to do whatever they chose to require, and consequently, the order being in writing and refusal to obey admitted, that there was no question of fact in the case. The defendant's contention is not well founded. While the contract contains no limitations with respect to the services to be required under it, conditions are implied with reference to which the law presumes that the parties contracted. Wood's Master and Servant (2d Ed.) § 83. Thus it must be presumed that the defendant employed Rorison with some regard to his known capabilities. A master has no right to require, and a servant is not bound to attempt, the impossible. A person known, when employed, to possess no technical skill, cannot be required, under pain of dismissal, to attempt a difficult engineering undertaking, even though he has agreed to do such work as his employer may direct. Upon similar principles the defendant has no right to require Rorison to make investigations involving the expenditure of money without making reasonable provisions therefor, in view of the conditions under which the investigations were to be made. The question, then, whether the order was reasonable, did not rest wholly upon undisputed facts. The capabilities of Rorison and the defendant's knowledge thereof were matters of fact to be found from the evidence. The nature of the work required could only be shown by testimony concerning the character of the country. The character of the country also indicated whether the provisions in the order for meeting Rorison's expenses were reasonable.

The facts being disputed, it was for the jury to determine whether the order was reasonable. The rule stated in Wood's Master and Servant (2d Ed.) p. 227, § 119, based upon early decisions, is not changed in any of the cases cited by the defendant:

"But, if the command of the master involves the doing of an unlawful act or is unreasonable, * * * the servant may refuse to obey without subjecting himself to dismissal upon legal grounds. But in all such cases the question of reasonableness is one of fact. * * *

"But a refusal or neglect on the part of the servant to obey a lawful and reasonable command of the master, which, in view of all the circumstances, amounts to insubordination, and is inconsistent with his duties to his mas-

Digitized by Google

ter, is a good ground for his discharge. But in determining this question reference must always be had to the contract, the nature and character of the business for which the servant was employed, and the command itself. What might be regarded as insubordination in a servant employed in one capacity might not be so regarded of a servant of another. Therefore the question is one of fact for the jury."

There was no error in the action of the trial court in submitting the question of reasonableness of the order to the jury.

The court, however, went further than this and, at the request of the plaintiff, instructed the jury as follows:

"If the jury find from the evidence that the officers of the company in giving Brainerd Rorison the orders contained in the letter of July 22, 1902, acted in bad faith, and for the purpose of getting rid of Brainerd Rorison, then his discharge, because of his refusal to carry out the said orders, was unjustifiable."

This charge was erroneous. A master has the right to give reasonable orders to a servant, even though he knows the work required is distasteful. He may give them with the expectation that the servant will leave his employment rather than obey. He may even give them for the express purpose, as stated in the charge, of "getting rid" of the servant. The motive of the master in giving the order is not important. Whether the order is reasonable is all important. A servant is bound to obey reasonable orders given in bad faith. He is not bound to obey unreasonable orders given in good faith.

As a new trial must be had by reason of this misdirection, we think it unnecessary to consider the other specifications of error.

The judgment is reversed.

WARD, Circuit Judge (concurring). I agree with the opinion of the court in this case, but go further, and think that a verdict should have been directed for the defendant. There was no dispute about the facts connected with the order given to the plaintiff to go to Mexico, his refusal to go, and his discharge by the defendant. These facts were all evidenced in written communications. It seems to me that the order to the plaintiff to go to Mexico and report on the company's property there was clearly within the contract of employment and reasonable. Most of the things which he was required to do after arrival involved reports as to the condition of its property which it was very natural for the defendant to want and which any intelligent person could make. If the plaintiff was not qualified to do some of these things or was not sufficiently equipped by the defendant to do them, he could not have been lawfully discharged for not doing them. The question of the reasonableness of the order in respect to these particulars would arise only if the defendant had discharged the plaintiff for not performing them, but he was discharged for refusing to go to Mexico at all, and I think there was no justification for his refusal.

Digitized by Google

(161 Fed. 94.)

ROWLEY v. J. F. ROWLEY CO.

(Circuit Court of Appeals, Third Circuit. May 1, 1908.)

No. 44.

1. TRADE-NAMES—USE OF NAME—FRAUD.

While every man is entitled to use his own name in connection with his business, equity will not permit its use in such a manner as to perpetrate a fraud.

[Ed. Note.—For cases in point, see Cent. Dig. vol. 46, Trade-Marks and Trade-Names, § 84.]

2. SAME—INJUNCTION—SCOPE OF RELIEF—EXPLANATORY DESCRIPTION.

Complainant's president, having built up a business in the manufacture of artificial legs under his own name, which were widely known as "Rowley" legs, transferred his business and good will to complainant, after which defendant, whose name was also Rowley, embarked in the same business, and advertised himself as manufacturing "Rowley" artificial legs. *Held*, that an injunction restraining defendant from any use of the name "Rowley" in the manufacture of artificial limbs was too broad, and should have been limited to the use of the name without some explanation which would prevent deception.

[Ed. Note.—For cases in point, see Cent. Dig. vol. 46, Trade-Marks and Trade-Names, § 84.]

Appeal from the Circuit Court of the United States for the Western District of Pennsylvania.

For opinion below, see 154 Fed. 744.

John H. Roney, for appellant.

Frank Ewing, for appellee.

Before MOODY, Associate Justice of the Supreme Court, and DALLAS and GRAY, Circuit Judges.

DALLAS, Circuit Judge. The appellee was complainant and the appellant was respondent in a suit in equity to restrain unfair competition in the manufacture and sale of artificial legs. The case was heard upon pleadings and proofs, and thereupon the decree now appealed from was entered, as follows:

"And now, November 13, 1907, this cause came on to be heard and was argued by counsel, and thereupon, upon consideration thereof, it is ordered, adjudged, and decreed that a perpetual injunction be granted in this cause against the said defendant, his agent, employés, servants, or by any one acting in his behalf, restraining him and them from making and selling any artificial limbs in imitation of the goods made and sold by the plaintiff in which the dress, covering, or appearance is such that it would likely deceive the public or prospective purchasers, from using as samples in selling goods any of the plaintiff's make of goods or any goods so made in imitation of plaintiff's goods as would deceive the public or prospective purchasers; from mailing letters or circulars such as would deceive the ordinary purchasers into believing that the defendant's goods were the plaintiff's goods; from the use of the name 'Rowley' with or without initials in any manner whatsoever in the manufacture or sale of artificial limbs, or doing any other thing whatsoever that would tend to confuse the general public or prospective purchasers into believing that the goods made or sold by the defendant were the goods of the plaintiff. * * *"

When the cause came on for argument here, the appellant's counsel withdrew all objections to this decree other than that (as averred) there

Digitized by Google

was error in its award of an injunction restraining the defendant "from the use of the name 'Rowley,' with or without initials, in any manner whatsoever, in the manufacture or sale of artificial limbs"; and the validity of this single objection is the only matter now for determination.

The right of every man to his name is indisputable, though equity will not permit its use in such manner as to compass a fraud. No one, it is true, should be allowed so to employ it as to convey to the public the notion that his goods are the goods of another; but in completely depriving this appellant of the use of his own name we think the court below went too far. The rights of the two parties ought to have been reconciled by allowing the use but requiring it to be accompanied by an explanation which would avoid deception, "so as to give the antidote with the bane." Herring-Hall-Marvin Safe Co. v. Hall's Safe Co. et al., 28 Sup. Ct. 350, 52 L. Ed. 616. The defendant below has a right to carry on the business of manufacturing artificial limbs in his own name, and, though the abuse of that right must be prevented, its exercise should not be absolutely prohibited. Croft v. Day, 7 Beav. 84. We are not unconscious of the difficulty there may be in prescribing the precise terms of the explanation which, in view of all the circumstances, should be attached to the appellant's use of the name "Rowley," but it is a difficulty that, in the first instance at least, can best be dealt with (after a further hearing, if desired) by the court below; and the solution of which may be aided, we think, by consideration of the cases of Singer Mfg. Co. v. June Mfg. Co., 163 U. S. 169, 16 Sup. Ct. 1002, 41 L. Ed. 118, Hygienic Fleeced Underwear Co. v. Way, 137 Fed. 592, 70 C. C. A. 553, and especially Herring-Hall-Marvin Safe Co. v. Hall's Safe Co., supra.

Solely upon the ground that there was error in restraining the appellant from using his own name "in any manner whatsoever," instead of "allowing the use, provided that an explanation is attached," the decree of the Circuit Court is reversed, and the cause will be remanded to that court for further proceedings to be there taken in accordance with this opinion.

(161 Fed. 95.)

THE MONTEREY.

(Circuit Court of Appeals, Second Circuit. April 14, 1908.)

No. 194.

1. COLLISION—STEAMER AND PILOT BOAT—RULES GOVERNING NAVIGATION.

A steamer and a pilot boat which have agreed to come to a standstill, so that the pilot boat's yawl may bring a pilot to the steamer, are not navigating on independent courses, and the statute creates no presumption that one is the privileged and one is the burdened vessel, and defines no course of navigation to be followed by either. It is a case of special circumstances in which the vessels are co-operating in an agreed maneuver, and each is bound to act prudently toward the agreed end.

2. SAME—NEGLIGENT NAVIGATION—MUTUAL FAULT.

The sinking of a schooner pilot boat at sea in the night by being run down by a steamer on board which she had agreed by signal to put a

Digitized by Google

pilot *held* due to the fault of both vessels, neither of which was properly attentive to the movements of the other.

[Ed. Note.—For cases in point, see Cent. Dig. vol. 10, Collision, § 52.]

Appeal from the District Court of the United States for the Southern District of New York.

For opinion below, see 153 Fed. 935.

Carter, Ledyard & Milburn, Edmund L. Baylies, and W. J. Taylor, for appellant.

Wing, Putnam & Burlingham and Harrington Putnam, for appellee.

Before LACOMBE, COXE, and WARD, Circuit Judges.

WARD, Circuit Judge. A collision occurred about 4 a. m. December 15, 1906, between the schooner-rigged pilot boat Hermit and the steamer Monterey, after an agreement had been reached between the vessels that a pilot should be received on the steamer's port side. The steamer struck the starboard side of the pilot boat about amidships nearly head-on, causing her to sink in about five minutes, all on board being saved by the yawl.

The Hermit while cruising on her station, with a fresh breeze from the southeast, was hove to on her starboard tack heading E. by S., with her masthead light showing all around the horizon and her side lights burning, but screened. About 3:30 a. m. she discovered the masthead light of a steamer to the southward and eastward, and immediately began to show her torch. The steamer answered with a blue light, and the Hermit wore around to the northward until she got on a course S. by W. ½ W., when she uncovered and showed red light to the steamer. In the meantime the steamer's red light and a ladder light on her port side had become visible. After holding this course for about seven minutes, the Hermit again wore around to the northward on a hard aport wheel, which shut out her red light from the steamer, and, as the booms jibed over, she uncovered her green light, and maintained a course approaching the course of the steamer for four or five minutes, showing her masthead and green lights, during which time almost all her crew were engaged in launching the yawl on her port side with her sails between them and the steamer. The Monterey, coming up the coast on a N. by E. course, saw the pilot boat's torch about 3:30 a. m., answered with a blue light, and gradually hauled in to a N. NW. course, which she held steadily for about 10 minutes before the collision. She saw the red light of the pilot boat and no other light until suddenly her green light appeared close aboard on the port bow. Seven minutes before the collision she was proceeding at full speed of 10 knots and at 4:05 on seeing the green light slowed, and at 4:06 went full speed astern, and put her helm hard aport, the collision occurring between that time and 4:08, when her engines were stopped. The pilot boat attributes the collision to a rapid change of course by the steamer under a starboard helm, while the steamer attributes the collision to the attempt of the pilot boat to cross her bows, and to her failure to show proper lights. No signals of alarm were given by either vessel to the other, and it is evident that neither discovered the prox-

Digitized by Google

imity of the other until the collision was inevitable. The district judge found the pilot boat solely at fault, and dismissed her libel.

It is difficult to imagine how such a collision could have occurred without the fault of both vessels; for vessels sailing on courses the steering and sailing rules seek to prevent collisions by defining one as the privileged vessel and requiring her to keep her course and speed and one as the burdened vessel and requiring her to keep out of the way. In a collision between such vessels, the burdened vessel must be held at fault, unless the privileged vessel has violated her statutory duty. But a steamer and a pilot boat which have agreed to come to a standstill so that the pilot boat's yawl, may bring a pilot to the steamer are not navigating on independent courses at all. The statute creates no presumption that one is the privileged and one is the burdened vessel, and defines no course of navigation to be followed by either. It is a case of special circumstances. The vessels are co-operating in an agreed maneuver, and each is bound to act prudently toward the agreed end. In this case, as the pilot boat intended to come to a stop about a mile ahead and on the port bow of the steamer, it is evident she could not have been watching the steamer's movements. On the other hand, if the steamer had observed the pilot boat, she would have come (as it was her duty to do) to a stop or to a very slow speed at a safe distance from her.

The pilots testify that their masthead light was burning, and continued to burn until it was submerged. As they are compelled by law to carry this light, and it is their distinctive sign, on the display of which their living depends, and as it shows all around the horizon and can be seen from any part of the deck, we find that it was set and burning. There is no dispute that the green light was burning, and the pilots testify that it was uncovered as soon as in wearing around the booms jibed over so that it would be visible to the steamer. This was a natural thing to do, and we find it was done. The diagram submitted by the claimant of the movements of each vessel for seven minutes before the collision shows that the green light would have been visible to the steamer for more than three minutes before the collision. Both these lights should have been seen by those on the steamer, and would, if seen, have advised them of what the pilot boat was doing. We are confirmed in this conclusion about the pilot boat's lights by the very unsatisfactory testimony on the subject from the steamer. In the first place, no one of the witnesses examined from the steamer saw the pilot boat's masthead light at all, nor the green light until the collision was inevitable. Nor did anyone see her torch light, except the second officer, who says he saw it twice, and the master, who saw it half a dozen times. Giacche, the lookout on duty from midnight to 4 a. m., saw the red light 10 to 15 minutes before he left the watch on the port side, and no other light at all. Ranier, who relieved him at 4 a. m., saw the red light and no other light. Stuart, the quartermaster on duty at the wheel, says the pilot boat was reported at a quarter of 4, and the only light he saw was the green light a little on the port bow, not over a ship's length away. Van Sicklen, who relieved him at 4 a. m., says he saw the red light on the port side about two minutes to 4, and then the green light. Korn, third officer, on watch on the bridge

Digitized by Google

from midnight to 4 a. m., saw the pilot boat's torchlight about 3:35, afterwards saw the red light, and at eight bells lost the red light. Banvard, second officer, who relieved him at 4, saw the green light, and no other. Smith, the master, who had been on duty for nine hours, saw the torchlight about 3:30, and half a dozen torches in all; saw the red light and then lost it; next saw the green light about the same bearing as the red light, on the port bow, just before collision. Mackie, second assistant engineer, in charge until 4 a. m., got a full speed bell 3:52, slow 4:05, when he went up on the main deck, and saw the green light about a ship's length away on the port bow. Mehlman, first assistant engineer, relieved Mackie at 4:05, got full speed astern 4:06 and stop 4:08. The entries in the ship's logs give confirmation of the negligence of those on the steamer.

The scrap log states:

"3:50. Full ahead; pilot boat on port bow showing red light.
"4:00. Slow.
"4:05. Pilot boat No. 7 showed a green light; put both engines full speed astern."

The ship's log states:

"3:50. Full speed ahead.
"4:00. Slow; pilot boat on port bow showing red light.
"4:05. Pilot boat 7 showed a green light; wheel hard aport and both engines full speed astern."

The engineer's log states:

"3:52. Full speed. 4:05, a. m. slow bell; full astern 4:06; stop 4:08."

It will thus be seen that nothing whatever was said either in the scrap or the ship's log about any failure of the pilot boat to show her masthead light or about any time during which all lights disappeared, upon which circumstances the steamer's witnesses laid great stress. The ship's log reads as if the red light had not been seen before 4, whereas the scrap log shows that it had been seen at 3:50, and as if the engines had been slowed immediately on seeing the red light (as they should have been), whereas the scrap log shows they were not slowed for 10 minutes after. The engine room log shows that, instead of going from slow ahead at 4 to full speed astern at 4:05, the engines were first put at slow 4:05, and full speed astern 4:06, the loss of a minute when collision must have been inevitable.

This collision took place just about the change of the watch, and the conclusion is irresistible that those on board the steamer who ought to have been diligently observing the pilot boat were not doing so.

The decree is reversed, with costs, and, both vessels being held at fault, the District Court is directed to enter a decree in favor of the libelants for half damages, with an order of reference.

Digitized by Google

(161 Fed. 99.)

MORSE DRY DOCK & REPAIR CO. v. SEABOARD TRANSP. CO.

(Circuit Court of Appeals, Second Circuit. April 14, 1908.)

No. 200.

1. CONTRACTS—DEFAULT IN COMPLETION OF WORK—PROVISION FOR LIQUIDATED DAMAGES.

A provision in a contract for making alterations in a ship for liquidated damages for failure of the contractor to complete the work by the time fixed is not waived nor modified by a further agreement for changes in the specifications or extra work not necessarily requiring additional time, and when none was at the time asked or provided for.

2. SAME—CONTRACT FOR ALTERATION OF VESSEL—EFFECT OF OWNER'S DELAY IN FURNISHING MACHINERY.

Under a contract for making alterations in a vessel containing a provision for the payment by the contractor of liquidated damages for each day's delay in completion of the work beyond the time fixed, and which required the owner to furnish certain machinery to be installed, where it was furnished so late that the contractor could not have completed the work in time, the owner cannot insist on a strict enforcement of the contract by claiming that its own default made no difference, but the contract time for completion must be treated as extended for a sufficient length of time to permit the installment of the machinery after it was furnished, even though the contractor could not have installed it before if it had been delivered in time, and damages can be recovered only for delay beyond such extended time.

Appeal from the District Court of the United States for the Southern District of New York.

For opinion below, see 154 Fed. 90.

Armstrong, Brown & Boland and P. M. Brown, for appellant.

Rumsey, Sheppard & Ingalls, Melville E. Ingalls, Jr., and John S. Sheppard, for appellee.

Before LACOMBE, WARD, and NOYES, Circuit Judges.

NOYES, Circuit Judge. The respondent desired certain alterations made in its ship, the John A. Briggs. It accordingly prepared specifications of the work required and sent them to the libelant. The libelant responded with the following proposal dated September 5, 1906:

"We hereby agree to faithfully carry out and complete all the alterations and repairs to ship John A. Briggs, as set forth in specifications dated New York, August 30th, 1906, and to abide by all the conditions expressed or implied therein for the sum of eight thousand five hundred and ninety-six ($8,596) dollars, and to complete the work in thirty-five (35) running days from the time of delivery of the ship at our yard, or pay to her owners, the Seaboard Transportation Company, as liquidated damages and not as penalty, the sum of fifty dollars ($50) per day for each and every day during which completion shall be delayed."

The respondent accepted this proposition, and the ship was delivered on September 7, 1906. On September 16, 1906, the parties agreed to modify the contract by installing hawse pipes in place of the hoisting gear and anchor tables required by the specifications at an additional cost of $128. The respondent also ordered certain extra work amounting in the aggregate to $661.98. According to

Digitized by Google

the terms of the contract the work should have been completed on October 12, 1906. It was not in fact completed until November 15, 1906—34 days thereafter. The respondent deducted from the libelant's bill $1,700—being the liquidated damages stipulated in the contract—$50 per day—for the 34 days' delay. And the only matter in controversy here is whether the respondent is entitled to these liquidated damages.

While admitting the delay, the libelant urges two reasons why the liquidated damage clause should not apply: (1) The contract was changed. (2) The respondent failed to fulfill its part of the contract. The only change made in the contract was in substituting the hawse pipes for the hoisting gear. This change was unimportant, and it is manifest that the parties in making it did not intend to modify the time provision in the contract. The libelant, having agreed to make the change without requiring additional time, cannot now urge it as an excuse for the delay. The extra work ordered might have been done at the same time as the contract work and involved no delay in the latter. And the fact that this extra work was done in no way relieved the libelant from its obligation to complete the vessel within the stipulated time. But the question whether the respondent fulfilled its part of the contract and is in a position to claim damages for the delay is a more serious one. It was the duty of the respondent to furnish the windlass to be installed in the vessel. The installation of the windlass required about eight days' time. And yet the respondent only furnished it on October 11, 1906—the day before the time limited for the completion of the work. Whatever may then have been the state of the work it was obviously impossible to complete it in time.

The respondent urges, however, that its delay was immaterial—that a strike at the libelant's yards, and not the nondelivery of the windlass, was the real cause of the delay. The respondent also points out that the boiler to be connected with the windlass was not obtained by the libelant until some 10 days after the delivery of the windlass. And so the respondent urges that the delayed delivery of the windlass made no difference—that the same delay would have taken place had it been delivered earlier. The respondent's contention is based upon an assumption which it had no right to make. The respondent, seeking to enforce the damage clause in the contract, must show that it lived up to the contract itself. It cannot assume that its failure to perform its obligations made no difference. It is impossible to say what might have happened had the conditions been different. It cannot be said that, if the libelant had received the windlass earlier, it would not have made greater efforts to hasten the work. The respondent seeking to enforce the contract cannot recover damages for delay which may have been occasioned by its own default.

Had the failure of the respondent to deliver the windlass been the cause of all the delay—had the work been waiting for the installation of the windlass when it was delivered—the default of the respondent would undoubtedly have constituted a complete waiver of the time provision in the contract. As clearly stated by the New York Court of Appeals in Daunat v. Fuller, 120 N. Y. 558, 24 N. E. 816:

Digitized by Google

"It is a well-settled rule that, where one party demands strict performance as to time by another party, he must perform his part, and a failure on his part of the conditions which are required in order to enable the other party to perform on his part, and a failure on the part of the party demanding performance to do the preliminary work required to enable the other party to complete the work within the time limit, operates as a waiver of the time provision in the contract."

This case, however, does not come strictly within the rule. The delay of the respondent in delivering the windlass did not prevent performance by the libelant of those things required by the contract not connected with its installation. Had the libelant done its part, the work should have been completed within about eight days after the windlass was delivered. But the libelant took some 26 days more. For this additional delay the respondent can in no way be said to be responsible. It was undoubtedly caused by the strike. Consequently, while the circumstances are not such that the delay of the respondent operated as a waiver of the time provision in the contract, it did operate as an implied agreement extending the time sufficiently to permit the installation of the windlass. The case should follow the decision of the Supreme Court in McGowan v. American Tan Bark Co., 121 U. S. 600, 7 Sup. Ct. 1329, 30 L. Ed. 1027:

"The contract bound the defendants to supply the machinery, and set it up on the boat within 60 days. It is too plain for argument that the failure of the plaintiff to have the boat ready would excuse the defendants from strict compliance with this part of the contract. If the defendants proceed thereon under the contract, they were bound to complete the work within the time contemplated by the original agreement, and such additional time as was lost by the delay in the construction of the boat. There is nothing to show that the machinery could not have been erected within 60 days after the boat was ready to receive it. The parties treated the contract with full force except as to time within which it was to be performed, and the work was done, and payments made under the contract as thus extended in time."

Of the delay of 34 days in the completion of the work, only 27 days are attributable to the default of the libelant. Consequently of the $1,700 retained by the respondent it has no right to more than $1,350.

The decree of the District Court is reversed, with costs, and the cause is remanded, with instructions to enter a decree in favor of the libelant for $350 damages and costs.

(161 Fed. 101.)

THE WINNIE.

THE EDITH BEARD.

(Circuit Court of Appeals, Second Circuit. April 14, 1908.)

No. 228.

COLLISION—TUGS WITH TOWS MEETING—MUTUAL FAULTS.

The tug Beard, passing eastward through the channel between Shooter's Island and Staten Island with a dredge in tow on a hawser, and the tug Winnie, passing westward with two canal boats on her port and one on her starboard side, both *held* in fault for a collision between their tows; the Beard for failing to keep near the right-hand side of the channel,

Digitized by Google

which is 600 feet wide, and the Winnie for inattention to a meeting schooner and for failure to give the bend signal required by rule 5 of the inland navigation rules (30 Stat. 100, c. 4 [U. S. Comp. St. 1901, p. 2882]).

[Ed. Note.—For cases in point, see Cent. Dig. vol. 10, Collision, §§ 40, 200–202.

Signals of meeting vessels, see note to The New York, 30 C. C. A. 630.]

Appeal from the District Court of the United States for the Southern District of New York.

Mr. Hyland and Nelson Zabriskie, for libelant.

Sutherland D. Smith, for the Edith Beard.

Robinson, Biddle & Benedict (William S. Montgomery, and Roderick Terry, Jr., of counsel), for the Winnie.

Before LACOMBE, COXE, and NOYES, Circuit Judges.

COXE, Circuit Judge. This is an appeal from a decree of the District Court for the Southern District of New York, entered August 20, 1907, awarding damages to the libelant for injury to his canal boat, Joseph Crandall, against the tugs Winnie and Edith Beard. The injury was occasioned by a collision which occurred in Shooter's Island Channel, which is about 600 feet wide and divides Shooter's Island from Staten Island. Previous to the collision, which occurred April 7, 1906, at about 5 o'clock in the afternoon, the Edith Beard was bound east having in tow a steam dredge on two hawsers 150 feet long, and back of the dredge a water boat also on two hawsers. Before entering the channel the Beard sounded one long blast on her steam whistle and on sighting the Winnie, bound west, she gave one blast indicating her intention to pass port to port. The Winnie, bound west through the channel, had two light canal boats on her port side and one on her starboard side, the Crandall being the inside boat on the port side. No bend signal was blown by the Winnie. The tide was the last of the flood and what there was of it was with the Beard and against the Winnie, but as it set towards the northeast the tendency was to sag the dredge toward the Shooter's Island shore. The wind was about west, the weather was clear. The Beard was followed by a schooner sailing free, or on the port tack. The Beard passed the Winnie, clearing the outside canal boat by about 50 feet. Soon after the schooner was sighted it became evident that she was endeavoring to pass between the Winnie and the Shooter's Island docks. As there was insufficient room for her to do this unless the Winnie moved out nearer the center of the channel, the latter reversed her engines and backed, enabling the schooner to pass in safety, but by a very narrow margin. In executing this maneuver the Winnie's stern was thrown to port and into the course of the dredge in tow of the Beard. As soon as the schooner had passed, the Winnie put her helm hard astarboard and endeavored to clear the dredge but failed to do so, the port corner of the dredge striking the stern of the outside canal boat with such force that she crowded the Crandall against the fenders of the tug and broke in six of her starboard planks.

Digitized by Google

The testimony was taken in open court. The schooner was not made a party to the action. We think the Beard was negligent in not keeping on the southerly side of the channel, especially in view of the fact that her large unwieldy tow was sagging towards the northerly side, where the Winnie's flotilla, approximately 100 feet in width, was to pass. In addition to this the Beard knew that the overtaking schooner, which had the right of way, was evidently intending to pass both tugs on the northerly side. The conduct of the Beard so limited the theater of operations that a collision was the natural result. The schooner by taking in her booms barely scraped through between the Winnie's starboard tow and the docks and dredge struck the port tow before the Winnie could swing her free. The great weight of testimony is to the effect that the dredge, at least, was well over on the wrong side of the channel. If the Beard had been on the southerly side where the law required her to be, the collision could not have occurred. The district judge held the Winnie in fault for not noticing the schooner until the vessels were almost in collision. We also think she was culpable in not giving the bend signal as required by inland rule 5 (30 Stat. 100, c. 4 [U. S. Comp. St. 1901, p. 2882]), directing a steam vessel, when approaching a short bend where the view is obstructed, to give one long blast of her whistle and, also, in failing to answer the long blast of the Beard.

Counsel for the Winnie suggests that as the tugs exchanged passing signals when they were between 600 and 800 feet apart the omission of the bend signal could not have affected the result one way or the other. We are unable to accede to this view. The rule requiring a bend signal is most wise and salutary, it was absolutely ignored by the Winnie who not only failed to initiate the signal but also failed to answer the signal of the Beard. We cannot say that this violation of the law did not contribute to the collision. As this court said in The Transfer No. 8, 96 Fed. 253, 37 C. C. A. 462:

> "This rule, literally construed, is imperative upon every steamer nearing such short bend or curve, whatever may be her own intention as to future navigation after she shall have reached it."

We cannot say that the Winnie's tow was improperly made up, but, as she was navigating an aggregation of boats practically 100 feet square in a narrow channel, she should have taken every precaution not only to inform approaching vessels of her own position but also to learn of their positions at the earliest practicable moment. In both respects she failed. We find no error in the record.

The decree is affirmed with interest and costs.

Digitized by Google

(161 Fed. 104.)

WATT v. CARGO OF LUMBER.

(Circuit Court of Appeals, Second Circuit. April 14, 1908.)

No. 158.

1. SHIPPING—BILL OF LADING—RIGHT OF SHIPPER TO DEMAND.
A shipper of goods on a vessel is entitled to a bill of lading therefor as a matter of right; but, where the master claims demurrage for delay in loading, he has the right to give notice of the claim in, or by indorsement upon, such bill, so as to charge a transferee with such notice.

2. SAME—DEMURRAGE—DETENTION OF VESSEL BY LEGAL PROCESS.
A vessel is not entitled to demurrage for the time she is detained by a shipper by virtue of a legal seizure, although on a claim which was unfounded and subsequently dismissed, unless the proceeding was in bad faith or malicious.

[Ed. Note.—Demurrage, see notes to Harrison v. Smith, 14 C. C. A. 657; Randall v. Sprague, 21 C. C. A. 337; Hagerman v. Norton, 46 C. C. A. 4.]

Appeal from the District Court of the United States for the Eastern District of New York.

H. W. Goodrich, for appellant.

Conway & Williams (J. Parker Kirlen, Eustace Conway, and John M. Woolsey, of counsel), for appellee.

Before LACOMBE, COXE, and WARD, Circuit Judges.

WARD, Circuit Judge. August 24, 1905, the schooner Helen M. Atwood, under charter to deliver her cargo at New York, being about to sail from Mobile, the shipper demanded a bill of lading. Section 4 of the Harter act (Act Feb. 13, 1893, c. 105, 27 Stat. 445, [U. S. Comp. St. 1901, p. 2947]) makes the giving of a bill of lading stating certain particulars obligatory in the case of vessels trading between ports of the United States and foreign ports; but by virtue of long-established usage and without any statute a shipper is entitled to a bill of lading. It is a document of title, represents the goods, and is used commercially as security for advances.

The master, claiming seven days' demurrage during loading, refused to sign a clean bill of lading, but was willing to sign one which incorporated, or by indorsement or otherwise gave notice, of his claim. He was quite within his rights in taking this position, because any transferee of the bill of lading without notice could insist upon delivery of the cargo free of any claim for demurrage.

August 25th the shipper libeled the vessel upon the ground that the master was about to sail away without delivering a bill of lading and so to convert the cargo to his own use. If the shipper had any right in the premises, it would have been for damages arising from the failure of the master to deliver a bill of lading; e. g., loss of interest on the advances that in the ordinary course of business could have been obtained on it. We do not think that carrying the cargo to destination in compliance with the charter, of which the shipper was fully advised, could be regarded as a conversion. It also appears that the shipper admitted that some demurrage was incurred in load-

Digitized by Google

ing, but denied liability for it on the ground that it was caused by the charterer's inspector, as the court below subsequently found.

The master made no effort to release his vessel, but laid at Mobile until September 12th, when, all parties having come to some arrangement, the vessel was released, proceeded on her voyage, and on arrival in New York the master libeled the cargo for demurrage, but did not allege that the vessel was arrested in bad faith or out of malice. The court below decreed demurrage for $4^{2}/_{9}$ days, but refused to allow any demurrage for the time the vessel was in custody, and the libelant appeals.

The question is whether the shipper's conduct in libeling the vessel was in bad faith or malicious, so as to take the case out of the general rule that detention by virtue of a legal seizure on a claim subsequently dismissed creates no cause of action for damages. The Adolph (D. C.) 5 Fed. 114; Gow v. William W. Brauer Steamship Co. (D. C.) 113 Fed. 672. It will be noticed that the dispute between the master and the shipper was about demurrage, and that they were both wrong; the shipper denying that he was liable for any, and the master claiming 7 days, while the court below found $4^{2}/_{9}$ days. The shipper arrested the vessel, claiming a clean bill of lading, to which he was not entitled; but we do not think that he did so in bad faith or maliciously. The impasse was produced by the obstinacy of both parties.

The decree is affirmed, with costs.

(161 Fed. 105.)

CHANLER v. TOWN TOPICS PUB. CO. et al.

(Circuit Court of Appeals, Second Circuit. April 14, 1908.)

No. 202.

LIBEL AND SLANDER—ACTION FOR LIBEL—SUFFICIENCY OF COMPLAINT.

A complaint in an action for libel, which sets out the alleged libelous publication, is not demurrable, although it does not allege special damages, unless the words used are incapable of any reasonable construction which will make them defamatory.

In Error to the Circuit Court of the United States for the Southern District of New York.

W. D. Reed, for plaintiff in error.

Wray & Callaghan (Albert A. Wray, of counsel), for defendants in error.

Before LACOMBE, COXE, and WARD, Circuit Judges.

WARD, Circuit Judge. This is an action of libel against the owner and the editor of a paper called Town Topics, because of the following publication:

"The sensation of the country 'round about where Amelie Rives-Chanler-Troubetskoi lives in her singularly independent way reached a climax when the interchange of two dispatches was made between Prince Pierre, her present husband, who is somewhere else than at home, and her former husband, John Armstrong Chanler, who is hanging around Charlottesville, Va. The first telegram read: 'Our Amelie is ill—needs money—will you supply it?

Digitized by Google

Troubetskoi.' The answer came: 'It will be my pleasure—how much?—Chanler.' Gossips say that Mr. Chanler is constantly riding or driving with 'Our Amelie,' and is to be seen sitting on the porches of the Rives mansion; that he makes 'Our Amelie' presents of silver and what-nots, and is continually carrying or sending flowers and cardics to her. Moreover, it is said that, when Prince Pierre is at the house he and Chanler are bon camarades, hunting, fishing, golfing and hobnobbing like two brothers."

No special damages were alleged in the complaint, and the defendant demurred on the ground that it did not state facts sufficient to constitute a cause of action. The demurrer was sustained and the plaintiff appeals.

Unless the words are incapable of any reasonable construction which will make them defamatory, the demurrer should have been overruled. Press Pub. Co. v. McDonald, 63 Fed. 238, 11 C. C. A. 155, 26 L. R. A. 53; Culmer v. Canby, 101 Fed. 195, 41 C. C. A. 302. We think that the article could reasonably be construed as holding the plaintiff up to ridicule and contempt.

For this reason the case should be submitted to a jury to determine the meaning of the words used, and the judgment is reversed.

(161 Fed. 106.)

THE RYGJA.

(Circuit Court of Appeals, Second Circuit. April 14, 1908.)

No. 208.

1. SHIPPING—TIME CHARTER PARTY—USE OF WORD "ABOUT."

The word "about," used in a time charter in designating the length of the term, is applicable to the term whether it be over or under the exact term stated, and, if the voyage terminates so near the end of the fixed time as to make another voyage unreasonable, the charterer may deliver or the owner may withdraw the vessel, or, if another voyage is reasonable, the charterer may require it at the charter rate of freight.

[Ed. Note.—For other definitions, see Words and Phrases, vol. 1, pp. 21-28.]

2. SAME—TERMINATION OF CHARTER.

A charter was for "about six calendar months," with a privilege of renewal to the charterer on notice for about six months more, which notice was given. The vessel completed the voyage she was then on 50 days after the expiration of the first six months, and entered upon another. *Held*, that the first term ended and the second began at that time, and not at the end of six months from the time the first began, and, that on the termination of the second voyage in New York some 30 days before the expiration of six months from the time it commenced, the charterer was entitled to exercise an option given him by the charter party to redeliver the vessel in a European port.

Appeal from the District Court of the United States for the Southern District of New York.

For opinion below, see 149 Fed. 896.

Ralph James M. Bullowa, R. J. Bullowa, and Sutherland D. Smith, for appellant.

Convers & Kirlin and J. Parker Kirlin, for appellee.

Before LACOMBE, WARD, and NOYES, Circuit Judges.

Digitized by Google

WARD, Circuit Judge. The Tweedie Trading Company chartered the steamship Rygja for a period of about six calendar months to be employed between, among others, ports in the United States and/or West Indies and/or South America and/or Europe.

The charter party contained the following clauses:

"(4) That the charterers shall pay for the use and hire of the said vessel, one thousand and twenty-five pounds sterling per calendar month, commencing on and from the day of her delivery, as aforesaid, and at and after the same rate for any part of month hire to continue until her delivery, with clean holds to the owners (unless lost) at a United States, Gulf or Atlantic port, or a port in Europe at charterers' option."

"(25) That the charterers shall have the option of continuing this charter for a further period of about six calendar months more on giving notice thereof to the owners or their agents one month previous to the expiration of the first named term."

July 13, 1905, the steamship was delivered at a port in Italy. She proceeded to New York, loaded for South America, thence to the West Indies, thence to New York, where she completed her discharge March 4, 1906. The steamship then loaded for South America, thence to Cuba, thence to New York, where she completed her discharge August 4, 1906. December 12, 1905, the charterer declared its option for a second term under clause 25. June 12, 1906, the charterer declared its option to redeliver the steamship in Europe, a privilege which the testimony shows was valuable. The master refused to load for a European port under charterer's orders, and the charterer brought this action for damages for the withdrawal of the steamship from its use.

The question is did the second term begin at the end of the first six calendar months, viz., January 13th, or at the termination of the voyage, March 4th. No commercial understanding or practice is proved, and the construction of the clause is a pure question of law for the court to decide. Charters for a fixed period involve from the nature of things considerable difficulties because of the uncertainty as to the time voyages are likely to occupy. At the expiration of a fixed term the charterer is no longer entitled to possession. If in the employment of the ship he overruns the term, he is certainly liable at the charter rate of freight for the overlap, and, if freights have risen, to the difference between the market rate and the charter rate in addition. If the last voyage of the vessel terminate so near the expiration of the fixed term that another voyage cannot be made, the charterer either loses that time entirely, or if he employs the vessel on another voyage, he does so at the risk of being liable for the increase of the market rate of freight for the overlap. A clause was inserted to cover overlaps like No. 4 in this charter, providing that the charterer should pay at the charter rate until delivery of the vessel at the return port. Judge Brown in a case of overlap construed such a provision to entitle the charterer to at least one round voyage of the character contemplated in the charter at the charter rate of freight, unless the delay was due to his own fault. The Straits of Dover Steamship Co. v. Munson (D. C.) 95 Fed. 690. In the case of an underlap he held, collecting the intention of the parties from the whole document, that the charterer might employ the vessel on the shortest voyage contemplated by the

Digitized by Google

charter at the chartered rate of freight even if it was certain to overlap the term. Anderson v. Munson (D. C.) 104 Fed. 913.

In this charter the term is not an absolutely fixed period, but is "about six calendar months." The district judge restricted the effect of the word "about" to the underlap. Doubtless in a charter containing a clause like No. 4 the word is not necessary because that clause accomplishes the same thing. Still we think the word "about" applicable to the term whether it be over or under six calendar months, and that, if the last voyage terminate so near the end of the fixed time as to make another voyage unreasonable, the charterer may deliver and the owner may withdraw the vessel, or, if another voyage is reasonable, the charterer may require it at the charter rate of freight. This leaves room for dispute in the case of an underlap as to what voyage is reasonable, but that is a difficulty which cannot be avoided where a fixed term is not agreed upon. In this case, if there were no question of a second term, it could not be denied that the charter terminated March 4th. The charterer having declared its option for a second term, we think the further period began to run from March 4th.

The claimant relies much upon the fact that the charterer declared its option to the second term December 12, 1905, just one month and one day before the expiration of the first six months. We do not think this proves an understanding that the term should necessarily end then. It is natural under such charters to give notice with reference to the fixed period because it is certain, while no one can tell exactly when voyages will terminate, whether they underlap or overlap the fixed period. Mr. Tweedie testifies that he acted in a spirit of caution, and the claimant certainly cannot complain of getting a longer notice than the charter required.

The English cases cited are consistent with each other and with the foregoing views. In Bucknall Bros. v. Murray, 5 Com. Cas. 312, there was but a single term of about six calendar months which expired with an overlap for the last voyage ending at New York. The charterers contended that they had an option to redeliver the vessel in the United Kingdom. The court held that if they had such an option it could only be declared before the charter party came to an end. In Dene Steamshipping Co., Ltd., v. Bucknall Bros., reported in the same volume at page 372, the charterer was held to have the right to send the vessel on another voyage before the six calendar months under the charter had expired, although the voyage was certain to overlap. Upon the same principle a contrary result was reached in the Istok, 7 Com. Cas. 190, where it was held that under a charter for 12 months the charterer could not send the vessel on a return voyage after the fixed period has expired.

In the case before the court the voyage taken was a usual one and as it terminated March 4th, about one month and nine days was left of the second term when the steamship discharged August 24th, and the charterer was entitled to the benefit of its option to redeliver her at a port of Europe.

The decree is reversed, and the court below is directed to enter a decree for the libelant with a reference to ascertain the damages with interest and costs.

Digitized by Google

(161 Fed. 109.)

WILCOX et al. v. UNITED STATES.

(Circuit Court of Appeals, Eighth Circuit. April 27, 1908.)

No. 2,693.

1 JURY—TRIAL—NUMBER OF PEREMPTORY CHALLENGES.

Under sections 2240 and 2247, Mansf. Dig. (Ind. T. Ann. St. 1899, §§ 1583, 1590), defendants tried together for a misdemeanor are entitled to but three challenges, and the challenge of any one of them must be counted against all.

[Ed. Note.—For cases in point, see Cent. Dig. vol. 31, Jury, § 612.]

2. CRIMINAL LAW—FORMER JEOPARDY—ESTOPPEL BY VERDICT—BURDEN ON HIM WHO ASSERTS TO PROVE—TEST—IDENTITY OF EVIDENCE.

Where there are two actions between the same parties upon different causes of action, and there is, or may be, a material issue that may not have been raised, litigated, and decided in the action which has gone to verdict, the burden is on him who asserts to prove by pleading or evidence that the issue, right, or matter in question was actually and necessarily litigated and determined in the earlier trial.

The test of identity of issues is the identity of the evidence requisite to sustain them.

(Syllabus by the Court.)

In Error to the United States Court of Appeals in the Indian Territory.

R. A. Smith and Yancey Lewis, for plaintiffs in error.

James E. Gresham, for defendant in error.

Before SANBORN and ADAMS, Circuit Judges, and PHILIPS, District Judge.

SANBORN, Circuit Judge. The plaintiffs in error, Wilcox and Ungles, were jointly indicted, tried, and convicted in the Indian Territory of maliciously disturbing the peace of the family of J. W. McCreary by threatening to fight and fighting in the vicinity of his residence. They complain that the trial court allowed them but three peremptory challenges. The controlling statutes read:

"The defendant is entitled to twenty peremptory challenges in prosecutions for felony and to three in prosecutions for misdemeanor." Mansf. Dig. Ark. § 2240 (Ind. T. Ann. St. 1899, § 1583).

"When several defendants are tried together, the challenge of any one of the defendants shall be the challenge of all." Section 2247 (section 1590). Act May 2, 1890, c. 182, § 33, 26 Stat. 96.

The plain meaning of these provisions of the law is that, if any one of the defendants challenges a juror, all the defendants challenge him, and the challenge must be counted against all. When three challenges have been made, whether by one or several joint defendants, and whether jointly or severally, each defendant has had three challenges, because the challenge of any one is the challenge of all. Glass v. Commonwealth (Ky.) 26 S. W. 811; 1 Thompson on Trials, 40.

The disturbance of the peace of which the defendants were convicted consisted of the assault and battery upon Charles O. Shepard, townsite commissioner of the Choctaw Nation, in front of McCreary's residence. Before the trial of this action the defendants had been

Digitized by Google

indicted, tried, and Wilcox had been acquitted of the offense of conspiring to injure Shepard, an officer of the United States, on account of his lawful discharge of the duties of his office, under section 5518, Rev. St. (U. S. Comp. St. 1901, p. 3714). It is assigned as error that the Court of Appeals of the Indian Territory sustained the admission of evidence by the trial court tending to show that Wilcox conspired with Ungles to commit the assault and battery upon Shepard, and its rejection of the indictment and verdict in the case for injuring him on account of his lawful discharge of the duties of his office. But the two offenses differed in character, in their essential facts, and in the evidence necessary to establish them. In actions between the same parties upon different causes of action the burden is upon him who asserts it to prove that any issue involved in the later was litigated and determined by the earlier trial. The test of identity of issues is that the same evidence was indispensable to sustain each. Ætna Life Ins. Co. v. Board of Com'rs, 54 C. C. A. 468, 474, 117 Fed. 82, 88; Board of Com'rs v. Sutliff, 38 C. C. A. 167, 171, 97 Fed. 270, 274; Southern Minnesota Ry. Extension Co. v. St. Paul & S. C. R. Co., 5 C. C. A. 249, 255, 55 Fed. 690, 696. The plaintiff in error, Wilcox, failed to bear this burden successfully. The fact that the jury acquitted him of the charge of conspiring to injure Shepard on account of his lawful discharge of the duties of his office did not establish the fact that they found that he did not conspire to assault and to injure him, and there was no other evidence of that averment. The verdict may have been founded on a finding that Wilcox conspired to commit the assault, but that he did not do so on account of Shepard's discharge of the duties of his office. There was, therefore, no error in the rejection of the former indictment and verdict, nor in the admission of the evidence that Wilcox conspired to commit an assault and battery upon Shepard.

It is assigned as error that after one or two witnesses had testified, and Shepard had denied, that just before the assault he had said, "You are a liar," the court refused to permit another witness to testify that Shepard's general manner of speech was loud and threatening, for the purpose of proving that it was more probable that in this instance he used, than that he did not use, the words charged. But the attempt was not to show that it was Shepard's custom or habit to use such words, but that it was his habit to speak loudly and threateningly, and evidence to that effect was too remote and inconsequential for admission.

There was no error in the trial, and the judgments of the courts of the Indian Territory are affirmed.

Digitized by Google

(161 Fed. 111.)

DEY TIME REGISTER CO. v. SYRACUSE TIME-RECORDER CO.

(Circuit Court of Appeals, Second Circuit. April 14, 1908.)

No. 126.

1. PATENTS—INFRINGEMENT—WORKMAN'S TIME RECORDER.
The Dey patent, No. 524,102, for a workman's time recorder, is for an improvement only, and entitled only to a narrow construction; as so construed *held* not infringed.

2. SAME—CONSTRUCTION OF CLAIMS.
When a claim of a patent is explicit, the courts cannot alter or enlarge it.

[Ed. Note.—For cases in point, see Cent. Dig. vol. 38, Patents, § 241.]

Appeal from the Circuit Court of the United States for the Northern District of New York.

On appeal from a decree dismissing the bill of complaint which is founded upon letters patent No. 524,102, granted August 7, 1894, to John Dey for a workman's time recorder. The opinion of the Circuit Court is reported in 152 Fed. 440.

Thomas W. Bakewell, Clarence P. Byrnes, and Clarence D. Kerr, for appellant.

Howard P. Denison and William W. Dodge, for appellee.

Before LACOMBE, COXE, and WARD, Circuit Judges.

COXE, Circuit Judge. The facts are so fully set out in the opinion of the Circuit Court that it is unnecessary to repeat them here. It will therefore be sufficient for us to state, as briefly as may be, the reasons which lead us to the conclusion that the cause was properly decided. The patent is in no sense a pioneer. It is unnecessary to explore the prior art to establish this proposition. The specification offers sufficient proof. The patentee there states that the invention pertains to the style of workman's time recorder shown in a patent granted to him September 24, 1889. He says:

"The invention consists in an improved reorganization of the recording mechanism and means for operating the same, all as hereinafter fully described and summed up in the claims."

In other words the patent is for improvements upon existing machines. It embodies no new idea, introduces no new principle of operation and accomplishes no fundamentally new result. All that it purports to do is to produce the old result with greater speed, accuracy and economy, by reorganizing the old machinery.

That a claim covering such an improvement is not entitled to a broad construction is too obvious to require the citation of authorities. Suffice it to say that the doctrine has recently been reaffirmed by the Supreme Court in Cimiotti Co. v. Fur Refining Co., 198 U. S. 399, 25 Sup. Ct. 697, 49 L. Ed. 1100, and Kokomo Fence Co. v. Kitselman, 189 U. S. 8, 23 Sup. Ct. 521, 47 L. Ed. 689.

That the patent in controversy did not even take "the last and successful step" is demonstrated by the fact that two months after the application for the patent in suit Dey applied for another patent for the

Digitized by Google

single roller improvement, similar to the machine used by the defendant. This was No. 522,784, issued July 10, 1894.

Although there are fourteen claims in the patent the first claim only is involved. It is as follows:

"A workman's time recorder comprising time-printing wheels, a band movable longitudinally in either direction in proximity to said printing wheels and having a longitudinal row of consecutive numbers marked upon it, a manually operated lever controlling the movement of said band, and an index traversed by said lever and numbered to correspond to the band, and a platen actuated by said lever and pressing the band into contact with the time-printing wheels, as set forth."

It will be observed that the second element of the claim is "a band movable longitudinally in either direction in proximity to said printing wheels, and having a longitudinal row of consecutive numbers marked upon it."

The fifth element is "a platen actuated by said lever and pressing the band into contact with the time-printing wheels."

Neither of these elements is found in the defendant's machine. Instead of a band moving longitudinally by the action of two rollers, the defendant's band is mounted on one roller and moves in a circle. Instead of a platen which lifts the suspended impression band up against the type wheels, the defendant, by proper mechanism, forces the type wheels down upon the paper band which is clamped upon the single roller or drum.

In short, the defendant has dispensed entirely with one of the rollers, the longitudinally moving band and the platen. In place of all this complicated mechanism it used a single roller and the substitution has compelled a reconstruction of the entire machine. The defendant's roller could not be substituted for the platen or one of the rollers of the patent, and accomplish any result whatever.

The two rollers are not mentioned, in totidem verbis, in the claim, but they are there by implication. Without them the claim would be meaningless for no other way is described for securing the longitudinal movement of the band. Assuming, for the moment, that a valid claim could have been drawn, based upon the present description and drawings, broad enough to cover the defendant's machine, it is enough for the present litigation that the claim in controversy is not such a claim. No canon of interpretation can construe a combination claim in an improvement patent to cover a structure which omits two of the elements of the combination.

"When a claim is explicit, the courts cannot alter or enlarge it." Keystone Bridge Co. v. Phœnix Iron Co., 95 U. S. 274, 24 L. Ed. 344.

The decree is affirmed, with costs.

Digitized by Google

(161 Fed. 241.)

CASCADEN v. WIMBISH.

(Circuit Court of Appeals, Ninth Circuit. April 7, 1908.)

No. 1,502.

1. MINES AND MINERALS—MECHANICS' LIENS—ALASKA CODE—WORK DONE FOR LESSEE OF MINING CLAIM.

Civ. Code Alaska, §§ 262, 263, and 265, provide, inter alia, for a laborer's lien for work done on a mine at the instance of the owner or his agent; that any person having charge of the work shall de deemed his agent; that in case the work is done for a lessee without the lessor's knowledge, the lien shall extend only to the leasehold interest, but the owner's interest shall be subject to a lien for any work done thereon with his knowledge, unless he shall give notice that he will not be responsible within three days after he obtains such knowledge. *Held*, that the lien given by such sections, construed together, extends to and binds the interest of the owner of a mining claim for improvements made thereon under direction of a lessee with the owner's knowledge and in the absence of any disclaimer of responsibility by him.

2. SAME—SUIT TO FORECLOSE LIEN—PARTIES.

In a suit against the owner of a mining claim to establish a laborer's lien thereon for work done at the instance of lessees, such lessees are not necessary parties, and it was within the discretion of the court to refuse to permit the filing of an amended answer setting up their nonjoinder as a defense, after the case was ready for trial, and after such lessees had left the jurisdiction of the court.

3. MECHANICS' LIENS—ALLOWANCE OF ATTORNEY'S FEES—CONSTITUTIONALITY OF STATUTE.

The provision of Civ. Code Alaska, § 270, authorizing the court to allow the plaintiff a reasonable attorney's fee on entry of judgment foreclosing a mechanic's or laborer's lien, is constitutional and valid.

4. MINES AND MINERALS—PERSONS ENTITLED TO LIEN—NATURE OF WORK.

Where men were hired to work in making improvements on a mining claim at a certain sum per day and their board, one who devoted a part of his time to cooking for himself and the others is entitled equally with the others to a mechanic's lien for his wages.

5. SAME—WORK ON MINING CLAIM—"LABOR DONE UPON CLAIM."

Work done in cleaning up and washing gold taken from a mining claim is "labor done upon the claim," for which the workmen are entitled to a lien under Civ. Code Alaska, § 262.

Appeal from the District Court of the United States for the Third Division of the Territory of Alaska.

The appellee brought a suit to foreclose laborers' liens on side claim No. 18A, below Discovery on Cleary creek, in the Fairbanks recording district, Alaska. One of the liens was for work done by the appellee. The others were liens assigned to him by men who were engaged in the same work. The mining claim belonged to the appellant. On October 21, 1904, he leased to Robert McMillan and others that portion of the claim commencing at a point 900 feet below the upper center stake, and extending thence the full width of the claim. The lessees were to pay him 40 per cent. of the gross output of all gold extracted. The lease was never recorded. Upon May 16, 1905, McMillan sublet to Clyne, Runner, Lungvich, and Saitz the lower 458 feet of the premises leased to him by the appellant. The sublessees were to pay McMillan 40 per cent. of the gross output. The appellant, while not mentioned in the body of the lease, joined with McMillan in its execution and acknowledgment. The sublease was not filed for record until August 15, 1905, about two months after the first lien claimant, Keith, had begun work under the employment of Saitz. The appellee, together with the other lien

Digitized by Google

claimants, were colaborers, employed in the first instance by Saitz, the sublessee who was in charge of the work. They afterwards continued working under the superintendency of one Andrich, who then had charge of the work. These laborers, when they entered into the employment of the sublessees, were told nothing as to the lease under which Saitz and the others were working. They first knew that their employers were laymen after Saitz left the claim on August 29, 1904. They continued to work under Andrich, who had acquired the interests of Clyne and Lungvich. The work which they did was to construct a 1,400-foot ditch and flume and to timber shafts and to make tunnels and cross-drifts. During all the time while the appellee and his colaborers were engaged in working on the claim, the appellant was in and about the property and saw them working. He gave them no notice or intimation that he disclaimed responsibility for any liens that might arise under the law. The appellant attempted to show that the appellee and his assignors had entered into an arrangement with the appellant and Andrich to take a lease with the latter, and in consideration thereof to release all claims against the property; but the weight of the evidence is that no lease was given to the lien claimants, but that when they told him they had no money the appellant urged them to go on and get something out of the ground, if they could before it froze, in order to pay their wages. This they did, and they succeeded in having two cleanups within four or five days before the freezeup, in which they realized some $55 apiece. Of the amount they had taken out, $100 was paid to the appellant, who claimed it as a royalty; but, when the men denied his right to royalty, he informed them that he was going to use it to pay one of the men who worked there. This occurred about September 24th or 25th, after which the laborers abandoned the claim, and filed their liens, crediting the $55 as paid to each thereon. There was a conflict in the evidence on the question of working the ground after Saitz left, but the court found that the appellee and his assignors worked for the sublessees under the superintendence of Saitz, with the assent and knowledge of the appellant after Saitz and Andrich had assumed control. A decree was entered sustaining and foreclosing the liens.

The provisions of the Civil Code of Alaska applicable to the case are the following:

"Sec. 262. Every mechanic, artisan, machinist, builder contractor, lumber merchant, laborer, teamster, drayman, and other persons performing labor upon or furnishing material, of any kind to be used in the construction, development, alteration or repair, either in whole or in part, of any building, wharf, bridge, flume, mine, tunnel, fence, machinery, or aqueduct, or any structure or superstructure shall have a lien upon the same for the work or labor done or material furnished at the instance of the owner of the building or other improvement or his agent; and every contractor, subcontractor, architect, builder, or other person having charge of the construction, alteration or repair, in whole or in part, of any building or other improvement as aforesaid shall be held to be the agent of the owner for the purposes of this Code.

"Sec. 263. The land upon which any building or other improvement as aforesaid shall be constructed, together with a convenient space about the same, or so much as may be required for the convenient use and occupation thereof (to be determined by the judgment of the court at the time of the foreclosure of such lien), and the mine on which the labor was performed or for which the material was furnished shall also be subject to the liens created by this Code if, at the time the work was commenced or the materials for the same had been commenced to be furnished, the land belonged to the person who caused the building or other improvement to be constructed, altered, or repaired; but if such person owned less than a fee-simple estate in such land, then only his interest therein shall be subject to such lien; and in case such interest shall be a leasehold interest, and the holder thereof shall have forfeited his rights thereto, the purchaser of such building or improvement and leasehold term, or so much thereof as remains unexpired at any sale under the provisions of this Code, shall be held to be the assignee of such leasehold term, and as such shall be entitled to pay the lessor all arrears of rent or other money and costs due under the lease, unless the lessor shall have

Digitized by Google

regained possession of the land and property, or obtained judgment for the possession thereof, prior to the commencement of the construction, alteration, or repair of the building or other improvement thereof; in which event the purchaser shall have the right only to remove the building or other improvement within thirty days after he shall have purchased the same; and the owner of the land shall receive the rent due him, payable out of the proceeds of the sale, according to the terms of the lease, down to the time of such removal."

"Sec. 265. Every building or other improvement mentioned in section two hundred and sixty-two, constructed upon any lands with the knowledge of the owner or the person having or claiming any interest therein, shall be held to have been constructed at the instance of such owner or person having or claiming any interest therein; and the interest owned or claimed shall be subject to any lien filed in accordance with the provisions of this Code, unless such owner or person having or claiming an interest therein shall, within three days after he shall have obtained knowledge of the construction, alteration or repair, give notice that he will not be responsible for the same, by posting a notice in writing to that effect in some conspicuous place upon the land, or upon the building or other improvement situated thereon."

T. C. West, Fernand de Journel, and H. J. Miller, for appellant.

John L. McGinn, Martin L. Sullivan, Campbell, Metson, Drew, Oatman & McKenzie, and E. H. Ryan, for appellee.

Before GILBERT, ROSS, and MORROW, Circuit Judges.

GILBERT, Circuit Judge (after stating the facts as above). The principal question here presented is whether a laborer's lien created by the Alaskan Code extends to and binds the interest of the owner of a mining claim for improvements made thereon under the direction of a lessee with the owner's knowledge, and in the absence of a disclaimer of responsibility by the latter. By section 262, it is provided that one who performs labor or furnishes material for construction or development of a building, mine, etc., shall have a lien thereon for work done or material furnished at the instance of the owner of the building or other improvement, and that every contractor, subcontractor, architect, builder, or other person having charge of such construction shall be held to be the agent of the owner. The object of section 263 is to declare to what land the lien shall extend, and it provides for a lien on a leasehold interest in cases where the lessee causes the work to be done, and the lessor has no knowledge that it is being done. Section 265 relates to cases where the owner, having such knowledge, fails to give notice that he will not be responsible therefor, and it applies as well to property under lease to another as to property not leased. It refers by its terms to section 262, and declares that there shall be a lien on the mine or improvement therein referred to if the owner, being aware of the work, fails to notify the laborer that he will not be responsible. In other words, these three sections, construed together, mean that the person in charge of the work shall prima facie be deemed to be the agent of the owner, and the property of the latter shall be charged with the lien under the express provisions of section 262; that, if the person in charge is not in fact such agent, the interest of the owner shall, nevertheless, be liable for the improvement if it is constructed with his knowledge, and he fails to post the required notice disclaiming

Digitized by Google

responsibility; and that, if the work is done for a lessee of the property, liability is confined to the leasehold estate, if the owner had not knowledge of the construction of the improvement, or if, having such knowledge, he gave notice that he would not be responsible. Such a construction gives effect to all the provisions of the law, and is the construction given to similar statutes in California, Nevada, and Oregon. West Coast Lumber Co. v. Newkirk, 80 Cal. 275, 22 Pac. 231; Title Guarantee & Trust Co. v. Wrenn, 35 Or. 62, 56 Pac. 271, 76 Am. St. Rep. 454; Cross v. Tscharnig, 27 Or. 49, 39 Pac. 540; Gould v. Wise, 18 Nev. 253, 3 Pac. 30.

It is assigned as error that the court refused to permit the appellant to amend his answer by adding thereto the allegation that Clyne, Runner, Lungvich, and Saitz were necessary parties to the final determination of the suit. This application was made when the cause came on for trial on November 8, 1906. The appellee objected to the amendment for the reason that it had not been suggested when the pleadings were made up, and for the further reason that the additional parties so named in the application were then out of the jurisdiction of the court and could not be served. The complaint had been filed on February 21, 1906, and the answer had been interposed on August 16th. While the persons so named in the application would have been proper parties to the suit, they were not necessary parties to the determination of the primary question involved therein, which was whether the interest of the appellant in the mining claim should be charged with the liens. There was no abuse of the discretion lodged in the trial court, therefore, in denying the application made so late and after the additional parties so suggested had left the jurisdiction of the court and could not be served.

Error is assigned to the allowance of attorney's fees to the appellee in the judgment in the court below. Section 270 of the Civil Code of Alaska (Act Cong. June 6, 1900, c. 786, 31 Stat. 536) provides that, in all suits to enforce such liens, the court, on entering judgment for the plaintiff, shall allow as part of the costs all moneys paid for the filing and recording of the lien, and also a reasonable amount as attorney's fees. It is contended that this provision for attorney's fees is unconstitutional. Counsel for the appellant cite the recent decision of the Supreme Court of California in Builders' Supply Depot v. O'Connor, 150 Cal. 265, 88 Pac. 982, in which that court held a similar provision of the statutes of California violative of the state Constitution, as well as of the fourteenth amendment to the federal Constitution, which guaranties to every person the equal protection of the laws. But in the present case the fourteenth amendment has no application for its prohibitions are addressed to the states only. No state shall deny to "any person within its jurisdiction" the equal protection of the laws. The only obligation resting on the United States is to see that the states do not deny that right. Civil Rights Cases, 109 U. S. 3, 3 Sup. Ct. 18, 27 L. Ed. 835; United States v. Cruikshank, 92 U. S. 542, 23 L. Ed. 588.

That such a statute is violative of state Constitutions has also been held in Randolph v. Supply Co., 106 Ala. 501, 17 South. 721, Davidson v. Jennings, 27 Colo. 187, 60 Pac. 354, 48 L. R. A. 340, 83 Am. St. Rep.

Digitized by Google

49, and Chair Co. v. Runnels, 77 Mich. 104, 43 N. W. 1006. But, the reverse has been held in Dell v. Marvin, 41 Fla. 221, 26 South. 188, 45 L. R. A. 201, 79 Am. St. Rep. 171, Duckwall v. Jones, 156 Ind. 682, 58 N. E. 1055, 60 N. E. 797, Robertson v. Moore, 10 Idaho, 115, 77 Pac. 218, Littell v. Saulsberry, 40 Wash. 550, 82 Pac. 909, Ivall v. Willis, 17 Wash. 645, 50 Pac. 467, Title Guarantee & Trust Co. v. Wrenn, 35 Or. 62, 56 Pac. 271, 76 Am. St. Rep. 454, Wortman v. Kleinschmidt, 12 Mont. 316, 30 Pac. 280, and Vogel v. Pekoc, 157 Ill. 339, 42 N. E. 386, 30 L. R. A. 491. In Gulf, Colorado & Sante Fé Ry. v. Ellis, 165 U. S. 150, 17 Sup. Ct. 255, 41 L. Ed. 666, the Supreme Court held unconstitutional a state statute allowing attorney's fees in certain cases of suits for personal services rendered to railroad companies, or for damages for overcharges on freight or claims for stock killed or injured by any railroad company, on the ground that such a statute operates to deny the railroad company the equal protection of the law, in that it requires them to pay in certain cases attorney's fees to the parties successfully suing them, while it gives to them no like or corresponding benefit. But in the opinion in that case the court had in mind the policy of state legislation for the protection of laborers' liens, and to distinguish the case under consideration from such a case said:

> "Statutes have been sustained giving special protection to the claims of laborers and mechanics, but no such idea underlies this legislation. It does not aim to protect the laborer or the mechanic alone, for its benefits are conferred upon every individual in the state, rich or poor, high or low, who has a claim of the character described. It is not a statute for the protection of particular classes of individuals supposed to need protection, but for the punishment of certain corporations on account of their delinquency."

It is the purpose of the lien law to secure "priority of payment of the price and value of work performed and materials furnished in erecting and repairing a building or other structure." Van Stone v. Stillwell & Bierce Mfg. Co., 142 U. S. 136, 12 Sup. Ct. 181, 35 L. Ed. 961. In harmony with this purpose and with the above-quoted utterance of the Supreme Court in Gulf, Colorado & Santa Fé Ry. v. Ellis, Congress has provided for the protection of the lien claimant by authorizing the court to allow him a reasonable attorney's fee in case the payment of his lien is unsuccessfully resisted. We find no ground for saying that such a law is unconstitutional.

It is contended that a portion of the work for which the liens were claimed was work for which no lien attaches under the law. It appeared that all of the men were hired at the usual rate of employment, which was $5 a day and board. One of them devoted a portion of his time to cooking for himself and the others, and the remainder of his time to work on the shafts and tunnels. It is urged, under the authority of McCormick v. Los Angeles City Water Co. et al., 40 Cal. 185, that for the time so devoted to cooking there could be no lien on the mining claim. We think the facts in the present case distinguish it from the case so cited. In that case, the cook was employed by one who had a contract to do a specific work for an agreed sum, and there was ground for holding that the expense of the cooking was not chargeable against the property. In the present

Digitized by Google

case, men were hired to work on the premises for a fixed price and their board. If they had been obliged to employ another to do their cooking, it is evident that it would have been necessary to increase their wages by the amount of the expense so incurred. The mining property received the benefit therefore of all the work done by all the men, and, in the theory of the lien law, the value of the mining property was enhanced by the whole thereof. In Young v. French, 35 Wis. 111, and Winslow et al. v. Urquhart, 39 Wis. 261, it was held that one who cooks for the men at work on logs, under a logging contract, is entitled to a lien for his wages under a statute which gives to every person who shall furnish any supplies or do or perform any labor or services, in cutting, felling, or hauling logs or timber, a lien on them for the amount due therefor. In Lybrandt v. Eberly, 36 Pa. 347, it was held that, if a mechanic engages hands at a certain sum per diem and their board, he may include in his lien the boarding of the workmen, and the same was held in Bangs v. Berg, 82 Iowa, 350, 48 N. W. 90, where it was a part of the contract that the owner of the property to be improved should board the hands and team engaged in the work.

Without merit, also, is the contention that the lien claimants should have no lien for the time and labor devoted to cleaning up and washing the gold taken out of the mine. This was labor done upon the mine within the meaning of section 262.

The decree is affirmed.

(161 Fed. 246.)

In re McCREA.

(Circuit Court of Appeals, Second Circuit. April 14, 1908.)

No. 204.

1. BANKRUPTCY — GROUNDS FOR REFUSING DISCHARGE — FAILURE TO KEEP BOOKS.

   When a bankrupt was an employé and not engaged in any business of his own, his failure to keep books showing his financial condition does not indicate a fraudulent intent which justifies the refusal of his discharge.

2. SAME—MAKING FALSE OATH.

   The fact alone that a bankrupt failed to schedule an interest in the estate of his deceased father is not necessarily attributable to a fraudulent intent, so as to justify the refusal of a discharge on the ground of his making a false oath in verifying his schedules, when by the will of his father the property was left in trust; and the question whether or not the bankrupt had an interest therein which was transferable was involved, and he, moreover, claimed to have transferred all of his interest in the estate to his wife while solvent.

3. SAME.

   A bankrupt is not guilty of making a false oath because he omits from his sworn schedule securities which are worthless.

Appeal from the District Court of the United States for the Northern District of New York.

Appeal from an order of the District Court, denying the application of a bankrupt for his discharge.

Digitized by Google

John R. Keeler, for appellant.
George B. Draper, for appellee.

Before LACOMBE, COXE, and NOYES, Circuit Judges.

NOYES, Circuit Judge. Augustine L. McCrea, having been adjudicated a bankrupt, applied in due season for his discharge. A creditor objected upon the following grounds: (1) That the bankrupt had committed an offense punishable by imprisonment under the bankruptcy law in knowingly and fraudulently making a false oath. (2) That he had fraudulently destroyed, concealed, and failed to keep records or books of account. (3) That he had failed to obey a lawful order of the referee for the production of books and papers. The District Court referred the matter to a special master, who reported that the creditor had failed to sustain his objections, and that the bankrupt was entitled to his discharge. The court, however, declined to confirm this report, sustained the creditor's objections, and denied the discharge. The bankrupt was entitled to his discharge as a matter of right, unless debarred upon one of the statutory grounds specified by the creditor. We will consider these grounds in their inverse order.

It is charged that the bankrupt disobeyed an order of the referee requiring him to produce certain books and papers. He produced some papers, and explained that others were lost or had been destroyed in a fire. He was not proceeded against for contempt, and the special master, who was also the referee issuing the order, was apparently satisfied that his explanation was correct, and found that he did not disobey the order. Upon an examination of the record we reach no different conclusion. While the attitude of the bankrupt upon his examination was the opposite of that of a frank witness, a finding that he intentionally violated the referee's order would be unwarranted.

The next objection to the discharge was that the bankrupt fraudulently concealed and failed to keep books of account showing his financial condition. There was no evidence that the bankrupt concealed any books for it did not appear that he kept any. He was the superintendent of a mine. His personal business did not require the keeping of books. His failure to keep them indicated no fraudulent intent.

The real question in the case, then, is raised by the first objection—whether the bankrupt was guilty of an offense under the bankruptcy law. The offense charged was that of making a false oath with respect to his property. The objecting creditor claimed that he knowingly and fraudulently withheld from his schedule of assets two items: (1) His interest in his father's estate. (2) His stock in the Standard Pyrites Company. The father of the bankrupt died in 1898, leaving a will in which he left his property in trust during the lives of the trustees. After providing for certain payments from the income to the testator's wife and daughter, the will directed the division of the remaining income among his children, including the bankrupt. Upon the death of either the wife or daughter during the existence of the trust the remainder income is increased. The will further provides that, upon the termination of the trust, the principal estate shall be divided among the children then living and the issue of deceased children. There was no evidence concerning the value of the estate or

Digitized by Google

the income thereof, except that the bankrupt's wife had received in the aggregate $172 therefrom. The real estate described in the will was situated in New York. The inquiry, then, is whether this interest of the bankrupt was property which passed to the trustee in bankruptcy and which should have been included in the schedule of assets, if not previously conveyed away.

With respect to the principal estate there is ground for two contentions: (1) It may be urged that the right of the bankrupt to take was wholly dependent upon the contingency that he outlive the surviving trustee—that it cannot be determined until the death of the trustee who the remaindermen will be. Such an interest in many jurisdictions would be held to be a mere contingent remainder and not "property," the title of which vested in the bankrupt, within the meaning of the bankruptcy law. See In re Twaddell (D. C.) 110 Fed. 147; In re Wetmore, 108 Fed. 523, 47 C. C. A. 477. (2) It may be contended that a devise of this character constitutes a vested and alienable remainder subject to be defeated by the contingency that the bankrupt may not outlive the trustees. The New York decisions are controlling with respect to the title to said real estate, and, although by no means uniform, seem to support the second contention. See Re Hoadley (D. C.) 101 Fed. 233. Moreover, in applying these decisions, we are met by the further inquiry whether the provisions of the will constituted a gift or a direction to divide. It is unnecessary for us to decide these questions. For the purposes of this case it is sufficient to point out their involved character.

The bankrupt's interest in the income is of a less uncertain nature. This interest seems to be vested and alienable. If not conveyed away, it undoubtedly should have been included in the bankrupt's schedule. The bankrupt, however, claims that some years before the bankruptcy proceedings, and before the creation of the debt due the objecting creditor, he conveyed all his interest in his father's estate to his wife in consideration of love and affection. He failed to produce the conveyance, and his testimony was insufficient to establish the due execution and delivery of a legal conveyance. But, if certain interests in the estate of the bankrupt's father should have been included in the schedule of assets, it does not necessarily follow that the bankrupt knowingly and fraudulently made a false oath when he verified the schedule which did not mention them. It was not obvious what interests belonged to the bankrupt or that they were transferable. Moreover, as we have pointed out, the bankrupt claims that he did not own those interests. Informality in the conveyance and its delivery might have rendered it illegal, and still not affect the bankrupt's good faith. That but very little income had ever been received did not affect the character of the interests as property, but did have a bearing upon the bankrupt's fraudulent intent. Taking into consideration all the testimony and all the circumstances, we cannot say that the creditor has clearly shown that the bankrupt fraudulently and knowingly made a false oath in not referring in his schedule to his interest in his father's estate.

The following language quoted with approval by the Circuit Court of Appeals of the Third Circuit in Woods v. Little, 134 Fed. 232, 67 C. C. A. 160, seems applicable here:

Digitized by Google

"Without discussing in detail the particular facts and circumstances of this case, we are of opinion the failure of the bankrupt to return in his schedule the interest complained of is not necessarily attributable to a fraudulent purpose. Indeed, the question of whether he had such an interest as passed under the bankrupt law was not easy to solution. The question of his right to discharge is a close one, but, on the whole, we incline to the opinion a discharge should be granted."

And as said in Re Wetmore (D. C.) 99 Fed. 703:

"The burden is upon the exceptant to prove the allegation of fraud to the satisfaction of the court, and this burden she has not sustained. The best that can be said about the testimony is that the existence of a fraudulent intent to conceal may be in doubt. But, considering the technical nature of the arguments in support of the propositions that the interest of the bankrupt under his father's will was a vested interest, and that he now derives his title to the fund from that instrument and not from the will of his mother, the bankrupt can hardly be charged with fraudulent concealment of his interest because he may not have understood its true legal paternity. Merely to omit property from his schedule of assets would rarely be enough to prove a fraudulent intent on the part of the bankrupt."

The further contention of the objecting creditor that the bankrupt made a false oath by verifying his schedule without including his shares in the Standard Pyrites Company requires little consideration. While it appears that this stock stands in the name of the bankrupt, it also appears that it is pledged as collateral, and that the property of the corporation has been disposed of upon the foreclosure of a chattel mortgage. There is nothing to show that this stock—and much more the bankrupt's equity in it—is of the slightest value. A bankrupt is not guilty of making a false oath when he omits from his sworn schedule securities which are absolutely worthless. The language of Judge Coxe in Re Eaton (D. C.) 110 Fed. 733, applies:

"There is nothing to show the value of the stock * * * when the schedules were filed. It may have become utterly worthless at that time. It had been transferred to a trustee who was authorized to sell it to satisfy unpaid assessments. A receiver had been appointed of all the bankrupt's property, including the stock. * * * In these circumstances a perfectly honest man might have thought that the stock was of no value and have forgotten to mention it in his schedules."

See, also, Matter of Pearce, 21 Vt. 611, Fed. Cas. No. 10,873.

We conclude, therefore, that the report of the special master who heard the witnesses and found that the creditor had failed to sustain his objections should have been confirmed by the court, and that the bankrupt should have received his discharge.

Only the matter of costs remains to be considered. As already stated, the bankrupt was not a frank witness. If discharges were granted only as rewards to bankrupts who freely furnish information to their creditors, this bankrupt would be pre-eminently not entitled to one. Undoubtedly this attitude brought upon him the action of the District Court; and, while we think the bankrupt entitled of right to his discharge and consequently set aside the action of the District Court, we are not inclined to require the objecting creditor to pay the costs of this appeal.

The order of the District Court is reversed, without costs.

Digitized by Google

(161 Fed. 250.)

ELLIOTT v. CANADIAN PACIFIC RY. CO.

(Circuit Court of Appeals, Second Circuit. April 14, 1908.)

No. 197.

1. MASTER AND SERVANT—RAILROADS—DEATH OF CAR REPAIRER—CONTRIBUTORY NEGLIGENCE.

Recovery for the death of a car repairer knocked down and killed by cars being shunted against a car while he was testing part of its coupler is precluded on the ground of contributory negligence, where, when the accident occurred, he was violating a rule that, when cars were being shunted, work should not be done upon cars without first obtaining permission of the foreman of the yard to put up a flag to indicate the workman's presence under or about the car; decedent having known that shunting was being done, and it not appearing that the rule had been previously violated.

[Ed. Note.—For cases in point, see Cent. Dig. vol. 34, Master and Servant, §§ 759–775.]

2. APPEAL AND ERROR—REVIEW—INSUFFICIENT BILL OF EXCEPTIONS.

Whenever a litigant proposes to ask an appellate court to review the testimony and to determine whether there was any evidence to warrant a recovery or to support a particular defense, he should cause a statement to be inserted in the bill of exceptions showing affirmatively that it contains all the testimony that was heard or produced at the trial. In the absence of such a showing, an appellate court must presume, in aid of the verdict, that there was testimony to support it, and that it would so appear if all the evidence had been incorporated into the record.

[Ed. Note.—For cases in point, see Cent. Dig. vol. 3, Appeal and Error, §§ 2916, 2917.]

In Error to the Circuit Court of the United States for the District of Vermont.

See 129 Fed. 163.

This cause comes here upon a writ of error to review a judgment of the Circuit Court in favor of defendant in error, who was defendant below. The action was brought to recover for the death of plaintiff's intestate, a car repairer in the service of defendant, who was run over and killed by a car which he was inspecting at Richford Station, Vt. It is charged that the accident was caused by defendant's negligence. At the close of defendant's evidence the defendant moved the court to direct a verdict in its favor upon 10 separate grounds, which were set forth in a written notice. The court granted the motion and directed a verdict in favor of defendant upon the ground that plaintiff's intestate was acting at the time of the injury complained of in disobedience of the rules and instructions of the defendant, which disobedience directly contributed to the injury complained of, to which ruling plaintiff duly excepted.

Max L. Powell, for plaintiff in error.

F. E. Alfred and W. B. C. Stickney, for defendant in error.

Before LACOMBE, WARD, and NOYES, Circuit Judges.

LACOMBE, Circuit Judge. This cause was before this court (Canadian Pacific R. W. v. Elliott, 137 Fed. 904, 70 C. C. A. 242) on a writ of error to review a former judgment in favor of the plaintiff, and the facts relevant to the questions now before us may be best set forth in excerpts from our former opinion:

"Besides the main line there are at Richford several sidings numbered, respectively, 1, 2, etc. A few minutes prior to the accident a through freight

Digitized by Google

train from Montreal had pulled into the yard. It was necessary to cut some cars out of it. Two cars which had been in the middle of the freight train were first sent down siding No. 1 in charge of one Sears as rear brakeman. After they were brought to a standstill, he returned to the train, and five cars located just in front of the caboose were cut out and kicked back on the same siding. Sears rode those also, and they came with great force against the other two cars, driving them back a considerable distance. Deceased and a car inspector, Green, had been examining a freight train which had drawn into the yard on the next siding, No. 2. They had finished that job, and were on their way back to the station to await the next job, when they drew near to the rear of two cars on siding No. 1. Elliott (the deceased) suggested that they should test the 'knuckle'—a part of the coupling—of the rear car. Both of the men thereupon stepped in behind the car, where they would be hidden from the view of any one 'riding down' any cars moving towards them on siding No. 1. The testing of the knuckle is an operation very quickly performed, but before they had finished it the five cars struck the two, and, as the latter moved backward under the impact, deceased was knocked down, run over, and killed."

It was contended by plaintiff that the accident was caused by Sears' improper handling of the five cars; that he was not a proper, efficient, and competent brakeman; and that defendant was negligent in intrusting such an operation to so incompetent a man. Upon the former appeal the case was disposed of on that branch of it which dealt with contentions of defendant that Elliott was himself guilty of negligence which caused the accident. It appeared that for a considerable time prior to August 10, 1901, the company's book of rules and regulations for the guidance of its employés contained rule 14, which provided that, when it was necessary "for car inspectors to work under a car," they must protect themselves by attaching to the car a red flag by day or a red light by night. This rule was on August 10, 1901, superseded by a new one which was substituted for it in a revised book of rules and which read as follows:

"Rule 26. A blue flag by day and a blue light by night, displayed at one or both ends of a car, engine, or train indicate that workmen are under or about it. When thus protected it must not be coupled to or moved. Workmen will display the blue signals and the same workmen are alone authorized to remove them. Other cars must not be placed on the same track so as to intercept the view of the blue signals, without first notifying the workmen."

No subsequent change was made in the rule prior to the accident which happened August 7, 1902. Upon the occasion in question when Green and Elliott stepped in behind the car and proceeded to test the knuckle no flag was put upon the car. The survivor, Green, when asked, on this trial, why this was, replied that he "couldn't tell why he didn't put up a flag."

Upon the former trial plaintiff undertook to prove that this rule had been so frequently and continuously disregarded, when merely the inspection of a knuckle was involved, as to make it a dead letter and disobedience of it no ground for imputing contributory negligence. The court on the former trial left that question to the jury upon all the evidence and the judgment in favor of plaintiff was reversed, because of error in the admission of evidence on that branch of the case. It will be observed that under the earlier rule the display of a signal was required only when car inspectors were at work under a car, while under the latter rule (26) such signals were called for when

Digitized by Google

workmen "are under or about it [the car]." The trial judge had admitted a very great deal of testimony showing the practice in this yard for a time long anterior, not only to the accident, but also to the amendment of the rule, and had sent it to the jury without any instructions or caution that so much of it only was relevant as indicated the practical construction put upon the amended rule. The judgment was reversed because "in our opinion there was not sufficient testimony to take the case to the jury on any theory that rule 26 had been waived by the company, or had been so frequently disobeyed, without effort to enforce it, as to have become a dead letter which the deceased could disregard without assuming the risk resulting from his disobedience of its provisions."

Upon the trial now under review the testimony on this branch of the case came in differently; and it is assigned as error that the court did not leave the question as to waiver of the rule to the jury. It is also contended that the rule should not be construed to cover knuckle testing; and error is also charged in the exclusion of testimony showing the practice in the yard subsequent to the accident. The bill of exceptions contains excerpts from the testimony accompanied with the statement that they "comprise all the testimony on this point, and are not qualified by anything else in the evidence." "This point" is "as to a custom in the yard of testing knuckles without putting up a flag before the adoption of rule 26." Although this statement as to the evidence would seem to warrant an inquiry by this court touching such assignments of error as are concerned with rule 26, it would be profitless to enter into it, because the direction of the verdict was not based solely upon the violation of rule 26, but was based also upon the "violation of one rule that there isn't the slightest evidence tending to show was ever violated in this yard," as the trial judge expressed it.

The bill of exceptions contains this statement:

"It appeared from the plaintiff's evidence, and was uncontradicted, that it was an established rule of the company that, when the shunting crew were at work shunting cars, no work should be done or attempted upon any of the cars without first obtaining permission of the foreman of the yard to put up the flag, and this rule applied to the two cars on siding No. 1 by the movement of which the plaintiff's intestate lost his life. There was no evidence that this rule had ever been violated, except on the occasion of the accident to Elliott."

In so much of the evidence as has been included in the bill of exceptions there is testimony warranting the conclusion, expressed by the judge in disposing of the case, that "the shunting crew was out there and both these men [Elliott and Green] knew it." Upon this state of facts the direction of a verdict for the defendant was not error.

Plaintiff in her brief—referring to the above quotation from the bill of exceptions as to uncontradicted evidence of an established rule of the company forbidding any work on a car when the shunting crew was at work—quotes the statement of one witness that it was not customary in the yard for inspectors, when about to test a knuckle, to go to the yard foreman and ask leave to put up a flag. But there are no excerpts of testimony bearing on this shunting rule, or custom, and no statement that all the testimony on this point of the case is contained in the record. Moreover, an examination of the whole bill of excep-

Digitized by Google

tions shows that it does not contain all the evidence. In which respect this case differs from Gunnison Co. v. Rollins, 173 U. S. 262, 19 Sup. Ct. 390, 43 L. Ed. 689. The rule is well settled that:

"Whenever a litigant proposes to ask an appellate court to review the testimony and to determine whether there was any evidence to warrant a recovery or to support a particular defense, he should cause a statement to be inserted in the bill of exceptions showing affirmatively that it contains all the testimony that was heard or produced at the trial. In the absence of such a showing an appellate court must presume, in aid of the verdict, that there was testimony to support it, and that it would so appear if all the evidence had been incorporated into the record." Taylor-Craig Corp. v. Hage, 69 Fed. 581, 16 C. C. A. 339; U S. Mutual Acc. Co. v. Robinson, 36 U. S. App. 690, 74 Fed. 10, 20 C. C. A. 262.

Without all the testimony on those points before us, we cannot tell whether or not the trial judge erred in holding that the deceased met his death by reason of his failure to obey a rule, which forbade him to manipulate the knuckles of cars with which a shunting crew was at work, which rule had never been violated before this accident, and that deceased knew the crew was at work when he disobeyed the rule. If he did not err in so holding, his conclusion that the accident happened through contributory negligence of the deceased is fully warranted.

All other exceptions relate to admission or rejection of testimony bearing on the defendant's negligence and need not be discussed. The judgment is affirmed.

(161 Fed. 253.)

SULLIVAN v. UNITED STATES.

(Circuit Court of Appeals, First Circuit. April 8, 1908.)

No. 729.

1. PERJURY—TRIAL—EVIDENCE.

On the trial of a defendant, charged with false swearing in a proceeding for the naturalization of an alien, in giving false testimony as to the length of time the applicant had been in the United States, the ship's manifest, showing the date of his entry, is admissible in evidence to establish such fact, on proper proof of identity.

2. SAME—SUFFICIENCY OF EVIDENCE—DOCUMENTARY EVIDENCE.

On the trial of a defendant for perjury in falsely testifying that he had known an applicant for naturalization for five years prior to the hearing, during which time he had been a resident of the United States, a ship's manifest, showing that the applicant arrived in this country as an alien less than five years prior to the proceeding, and that in answer to a question propounded by the ship's officers at the port of emigration he stated, not under oath, that he had never been in the United States, is insufficient alone to warrant a conviction.

Lowell, Circuit Judge, dissenting.

In Error to the District Court of the United States for the District of Massachusetts.

Harvey H. Pratt (James E. Cotter and Joseph P. Fagan, on the brief), for plaintiff in error.

William H. Lewis, Asst. U. S. Atty., and Asa P. French, U. S. Atty.

Before COLT, PUTNAM, and LOWELL, Circuit Judges.

Digitized by Google

COLT, Circuit Judge. The plaintiff in error, herein called the defendant, was convicted under Rev. St. § 5392 (U. S. Comp. St. 1901, p. 3653), of false swearing in a proceeding for the naturalization of one Molloy. The false swearing charged in the indictment consisted of the defendant's testimony that he had known Molloy for over five years next preceding the hearing in Molloy's case, during which time Molloy had resided at Boston. To certain rulings of the court below the defendant excepted, and he has prosecuted a writ of error to this court.

The defendant's motion to quash was overruled by the Circuit Court, and the defendant excepted. In Betts v. United States, 132 Fed. 228, 231, 65 C. C. A. 452, 455, this court said:

"The law is settled that, with exceptional cases, where the federal courts have conformed themselves to the ancient local practice, error does not lie to the overruling of such a motion."

Passing by the question, however, whether this motion to quash could be properly raised by the bill of exceptions, we think the motion was rightly overruled.

The defendant's exceptions to the introduction of evidence must also be overruled. There was no evidence of his duress, such as to exclude what he said to O'Neil, Waters, and Burke. The manifest of alien passengers was admissible. McInerney v. United States, 143 Fed. 729, 74 C. C. A. 655. There was evidence of the identity of Molloy, the passenger, with Molloy, the applicant for naturalization. No objection was made to the foundation laid by the government for the testimony of Burke concerning the certificate of naturalization seen by him in Molloy's possession. Had objection been taken, the defect, if any existed, might have been cured.

The only substantial question in the case is presented by the defendant's first and sixth requests for instruction, viz.:

"(1) Upon all the evidence in the case the defendant is entitled to an acquittal."

"(6) It is not enough to convict the defendant if the jury believe the statements in the manifest to be true. The government must present another witness or satisfactory corroborative evidence to the effect that the evidence given by the defendant in the naturalization proceedings was false."

The court refused to give these instructions, and the defendant duly excepted to the refusal, which he has assigned in his ninth assignment of errors.

The real question here presented is whether, under the rule of evidence in perjury cases, the manifest of itself was sufficient evidence to warrant the jury in finding a conviction of perjury.

Concerning the rule of evidence in perjury cases, and the reason upon which the rule is based, it is said:

"Presumption is ever to be made in favor of innocence, and the oath of the party will have a regard paid to it till disproved. Therefore, to convict a man of perjury, a probable or credible evidence is not enough; but it must be a strong and clear evidence, and more numerous than the evidence given for the defendant, for else it is only oath against oath." Vin. 16 (K) 328; The Queen v. Muscot, 10 Mod. 193; United States v. Wood, 14 Pet. 430, 438, 10 L. Ed. 527; Roscoe's Criminal Evidence (12th Ed.) p. 735; Regina v. Yates, Car. & Mar. 132.

Digitized by Google

The essence of the rule is that strong and clear proof is required to disprove the defendant's oath. The courts have always recognized the justice of the rule The Supreme Court says:

"It is a right rule, founded upon that principle of natural justice, which will not permit one of two persons, both speaking under the sanction of an oath, and presumptively entitled to the same credit, to convict the other of false swearing, particularly when punishment is to follow." United States v. Wood, supra.

Under the rule, the proof sufficient to warrant conviction in a perjury case must be either (1) the testimony of two witnesses contradicting the defendant's oath, or (2) the testimony of one witness and corroborating circumstances, or (3) documentary proof which is equally strong and convincing.

In United States v. Wood the court considered that the documentary proofs in the form of the defendant's letters were proofs "equivalent to the end intended to be accomplished by the rule," and that the rule should not be so applied as to "exclude all other testimony as strong and conclusive as that which the rule requires."

In cases where oral testimony is offered to prove the perjury, corroborative evidence is required. In cases where documentary evidence is offered to prove the perjury, corroborative evidence is not required; but the documentary evidence must be as strong and convincing as where oral testimony is relied upon.

In the case at bar the documentary evidence offered to contradict the defendant's oath was the manifest.

Respecting this manifest Benjamin F. Maricle, a statistician employed in the inspector's department of the Immigration Bureau, testified as follows:

"The lists or manifests were made up by various employés of the steamship company at the point of embarkation from information furnished them by the emigrants. These manifests are delivered to the inspector at the port of arrival, and are taken by him or his deputy, who examines the immigrant. If the answers of the immigrant correspond substantially to the information given by him to the officers of the steamship company at the port of departure, and recorded by this official there, the alien is permitted to land. The result of this examination is checked on the manifest in red ink, and any change or discrepancies noted in the same manner. These manifests are then bound and kept in the office of the immigration officials at Boston. These manifests are the only records of the landing of aliens in our office. During the voyage the steamship's purser checks off the names appearing on the list while making an examination for the purpose of seeing if the persons named in the manifest are on board. After this is completed the master of the ship makes oath to the fact that he has a given number of aliens on board, this oath being recorded on the manifest. The ship's surgeon also certifies to the condition of health of the alien passengers."

The manifest contains 22 questions which are asked each immigrant. These questions relate to name, age, and calling, nationality, etc. Question 15 reads as follows: "Whether ever before in the United States; and, if so, when and where?" To this question, as appears by the manifest, Molloy answered, "No."

The false swearing charged in the indictment, as we have already stated, consisted of the defendant's testimony that he had known Molloy for over five years next preceding the hearing in Molloy's

Digitized by Google

naturalization case, during which time Molloy had resided in Boston; and the only evidence in contradiction of the defendant's oath is the answer made by Molloy in the manifest to the question whether he was ever before in the United States. An answer by a third party, not under oath, in a document of this kind, is manifestly insufficient under the rule to warrant a conviction of perjury.

And here again we may refer to United States v. Wood:

"It must be conceded no case has yet occurred in our own or in the English courts where a conviction for perjury has been had without a witness speaking to the corpus delicti of the defendant, except in a case of contradictory oaths by the same person; but it is exactly in the principle of the exception, which is by every one admitted to be sound law, that this court has found its way to the conclusion that cases may occur when the evidence comes so directly from the defendant that the perjury may be proved without the aid of a living witness."

"In what cases may a living witness to the corpus delicti of a defendant be dispensed with, and documentary or written testimony be relied upon to convict? We answer: To all such where a person is charged with a perjury, directly disproved by documentary or written testimony springing from himself, with circumstances showing the corrupt intent, in cases where the perjury charged is contradicted by a public record, proved to have been well known to the defendant when he took the oath, the oath only being proved to have been taken; in cases where a party is charged with taking an oath, contrary to what he must necessarily have known to be the truth, and the false swearing can be proved by his own letters, relating to the fact sworn to; or by other written testimony existing and being found in the possession of a defendant, and which has been treated by him as containing evidence of the fact recited in it."

We do not think that the above examples from United States v. Wood were intended to be exclusive, but are given rather as illustrations. The whole spirit and reasoning of the opinion in that case is simply to the effect that when documentary evidence is relied upon in perjury cases it must be of a strong and convincing character, such as is required where the proof is by oral testimony.

The judgment of the District Court and the verdict therein are set aside, and the case is remanded to that court for further proceedings in conformity with this opinion.

LOWELL, Circuit Judge (dissenting). If the court had set aside the verdict of guilty because a majority of the judges deemed the evidence in this case insufficient to warrant the verdict under the rules applicable generally to criminal trials, I should have acquiesced in that judgment upon a simple question of fact. But the opinion of the majority is based upon a rule of law applicable only to trials for perjury and the like offenses. Our difference, therefore, appears to me important enough to justify an expressed dissent.

A rule which requires for conviction of perjury an artificial weight of testimony has strong authority. Ordinarily a jury may convict a defendant if the admissible evidence satisfies all the jurors of his guilt beyond a reasonable doubt. Upon an indictment for perjury, the unsupported oral testimony of one witness has been deemed insufficient, however completely it may convince the jury. This perjury rule, as it may be called, is not based upon an exceptional danger of unjust conviction. It is not analogous to the rule which requires the corrob-

Digitized by Google

oration of an accomplice because of the suspicion which properly attaches to an accomplice's testimony. The defendant accused of perjury is protected, not because of the inherent weakness of the testimony against him, but because of the artificial sanctity attached under the circumstances to his own oath. In other cases the jurors may accept the oath of a single witness against the defendant, or against the defendant's oath, if they believe the former is telling the truth.

The historical origin of the perjury rule is set out in Wigmore's Evidence, §§ 2032, 2040. It was borrowed, perhaps unwittingly, from the civil and ecclesiastical law as practiced in the Court of Star Chamber. The numerical estimation of testimony prevailed generally in those systems of law upon which the Star Chamber modeled its practice. To convict an accused in that court by oral testimony alone, there must be two witnesses testifying against him. The two-witness rule applied to all trials in which oral testimony was relied upon. When an advancing civilization brought the accused to trial before a trained judge, instead of a popular gathering, the formulary trials of primitive law—the ordeal, the duel, the compurgation—were naturally replaced by a system which graded the value of presumptions and of human testimony according to a scale based upon supposed reason and observation. The system was elaborate, even attaching to the witness' rank in society a graded credibility. The system was inherent in the nature of the tribunal. The expert judge, according to civil or ecclesiastical law, determined issues both of law and fact. His decisions concerning the former must be reconcilable with each other, and he sought to explain his judgments, written or oral, according to rules of general application. To formulate these rules was part of his duty. By analogy he did the like concerning issues of fact. In the search for general rules applicable here, the trained civilian and canonist judges elaborated a Theory of Proofs by which they were enabled to decide issues of fact without the formation of a plain man's opinion thereupon in each case, but solely by weighing presumptions and testimony according to an artificial standard. Esmein, Hist. Proc. Crim. 260.

How complicated the standard became the treatises show. So difficult is it to convict a guilty man according to any Theory of Proofs that the courts resorted to confession induced by torture. See St. 28 Hen. VIII, c. 15. The Star Chamber, by the like necessity, followed their example. Even in the Court of Chancery, where the judge for the most part decides issues of fact like a common-law jury—i. e., according to his actual belief derived from the testimony given in each case—yet there survive from the ecclesiastical procedure certain presumptions and artificial rules of evidence. 52 Am. Law Reg. 537; McCullough v. Barr, 145 Pa. 459, 22 Atl. 962.

The system of jury trials, as practiced at common law, is the opposite of all this. When a defendant put himself upon the country, instead of staking his case upon one of the formulary modes of trial, he took the judgment of the plain men of his neighborhood concerning his guilt or innocence. If they believed him guilty, they convicted him; otherwise, they acquitted him. Before them torture was impossible. They justified their verdict by no statement of their rea-

Digitized by Google

sons. In determining the issues of fact, they themselves were once the witnesses. While they may not now determine an issue without the evidence of others given thereupon, yet in reaching their decision they follow the methods of judgment which they use in reaching the decisions needed in their everyday lives. They are not required invariably to prefer one kind of evidence to another, nor are they bound to accept or reject evidence according to the number of witnesses who unite in it. In theory, at least, the jurors accept or reject the testimony submitted to them only because they believe or disbelieve it. See the French Code of Brumaire, art. 342; Esmein, 545. If, as is not improbable, some jurors resort in practice to the numerical system of weighing testimony, the method of jury trials prevents this occasional resort from hardening into a rule. Statutes have been passed which require some application of the numerical system in certain cases; but they are not numerous, and are now unlikely to increase.

The original requirement of two witnesses for a conviction of perjury has been so modified in the courts of common law that a conviction may now be had if the oral testimony of one witness can find any material and extraneous support. Though these modifications have rendered the perjury rule the more anomalous, yet the insufficiency of the oral testimony of a single witness is too firmly established for this court to support a conviction thereupon. In the case at bar the defendant seeks to extend the perjury rule to the contradiction of the defendant by documentary evidence. That a conviction may be sustained by purely documentary evidence was settled in United States v. Wood. The qualifications stated in the opinion in that case, as is said by the majority of this court, were not intended to be exclusive, but were given rather as illustrations. An example will suffice to show that this is true. Let us suppose that a witness, being required to give secondary evidence of the contents of a written instrument, has testified that the instrument contained certain expressions. On his trial for perjury he is contradicted by the document itself, which is without the expressions to which he has testified. The case is not within the qualifications of United States v. Wood; but the single piece of documentary evidence affords a contradiction of the defendant so strong and clear as to be absolutely conclusive. Its corroboration would be impertinent.

The majority of the court say that:

> "The only evidence in contradiction of the defendant's oath is the answer made by Molloy in the manifest to the question whether he was ever before in the United States. An answer by a third party, not under oath, in a document of this kind, is manifestly insufficient under the rule to warrant a conviction of perjury."

With due deference, I am of opinion that the manifest is much more than the answer of a third party not under oath. The defendant's oath to be contradicted was:

> "That he had known Molloy for over five years next preceding the hearing in Molloy's case, during which time Molloy resided in Boston."

The manifest shows, not merely that Molloy stated that he came first to Boston less than five years before the defendant's oath, but it

Digitized by Google

shows, further, that the proper officer prepared the manifest with Molloy present before him at some place outside the United States, and under circumstances which made it nearly or quite impossible that Molloy should have lived in Boston throughout the five years which the defendant had sworn to. That the manifest was admissible in evidence this court decided in McInerney v. United States, 143 Fed. 729, 74 C. C. A. 655. I think its weight was for the jury.

The introduction of an artificial standard of evidence into a jury trial is a cause of much practical difficulty. The practical limitations of a jury trial should always be kept in mind. A system wherein a definite and different quantitative effect is attached to the several classes of presumptions and evidence, a system wherein "strong circumstances" is a term of art, defined as precisely as robbery or a fee simple, may well require "strong circumstances" to warrant a conviction of crime. Under our system of jury trials the case is far different. In a trial for arson, for example, the jury may have been instructed that the evidence will not warrant a verdict of guilty unless it satisfies them all of the defendant's guilt beyond a reasonable doubt. In a subsequent trial they are instructed that in perjury, as distinguished from arson, "strong and clear evidence" is required for conviction. What meaning can they attach to the words quoted? Is the "strong and clear evidence" required in perjury stronger or weaker than the evidence which was sufficient to convict of arson? Does weak and doubtful evidence warrant a conviction of any crime? Is not confusion of mind the necessary result of a standard like that proposed? To introduce it is to confound trial by jury upon the testimony of witnesses with that antiquarian curiosity, trial by witnesses. 3 Bl. 336.

Considering that the artificial requirement of corroboration has been introduced into jury trials from the two-witness rule of the Star Chamber, contrary to the spirit of the jury system; considering, further, that the two-witness rule in the courts from which it was derived was there without application where the proof offered was documentary, and not oral—I think that the court is not bound to extend the perjury rule so as to cover a case in which it was not originally applicable under the Star Chamber practice. No case binding upon us requires us to disregard the considerations above stated. Difficult as it is to establish a quantitative measure of oral testimony, the difficulty is greater where the oath of the accused is weighed against the evidence of documents. To find a common measure which is quantitative here, recourse must be had to the subtleties of the Roman or of the ecclesiastical law. We depart less from the method of jury trial by holding that the requirement of corroboration in the case of perjury extends only to the corroboration of oral testimony, and that, if the contradiction of the oath of the accused be furnished by a document, it is for the jurors to say, as in other criminal trials, whether the admissible evidence thus furnished satisfies them of the defendant's guilt beyond a reasonable doubt.

Digitized by Google

(158 Fed. 30.)

WILLIAMS v. UNITED STATES.

(Circuit Court of Appeals, Eighth Circuit. November 25, 1907.)

No. 2,497.

1. INTERNAL REVENUE—"CASKS."

The term "cask" is generally understood to be a receptacle for liquids. either larger or smaller than the usual barrel, and, as employed in the statute respecting the manufacture and sale of spirituous liquors, pertaining to wholesale dealers, has a well-recognized import as a vessel containing not less than 20, 10, or 5 gallons wine measure, as provided by Rev. St. §§ 3287, 3323, 3244 [U. S. Comp. St. 1901, pp. 2130, 2167, 2096].

[Ed. Note.—For other definitions, see Words and Phrases, vol. 1, p. 1001.]

2. SAME—SALE OF SPIRITS—RECORDS—OMISSION—INDICTMENT.

Rev. St. § 3244 [U. S. Comp. St. 1901, p. 2096], defines a wholesale liquor dealer to be a person who sells or offers for sale foreign or domestic distilled spirits or wines in quantities not less than five wine gallons at a time. *Held* that, where an indictment charged defendant as a wholesale liquor dealer with sending out two casks of distilled spirits without making the required entries in his record book, required to be kept by section 3318 [page 2164] the indictment sufficiently charged that the casks contained each not less than five wine gallons.

3. SAME—ELEMENTS OF OFFENSE.

Rev. St. § 3318 [U. S. Comp. St. 1901, p. 2164], requires every wholesale liquor dealer at the time of sending out any spirits to enter in his record book the day when and the name and place of business of the person or firm to whom such spirits are to be sent, the quantity and kind or quality of such spirits, the number of gallons, the name of the distiller, and the serial number of the package. *Held* that, the gist of the offense being the sending out of any spirits without complying with the section, the quantity sent out was not an essential element thereof, so that an indictment charging that defendant, a wholesale liquor dealer, sent out of his stock two casks of distilled spirits, without making the required record entries, was not fatally defective in failing to specify the quantity shipped.

4. SAME—DESIGNATION OF CONSIGNEE AND DESTINATION.

The indictment was also not objectionable for failure to specify the name of the consignee or the place where the casks were sent; such specifications being mere matters of evidence of which defendant could have secured information by demanding a bill of particulars.

5. CRIMINAL LAW—RIGHT OF REVIEW—OBJECTIONS.

Where, in a prosecution for violating the internal revenue law, defendant admitted that he was a wholesale liquor dealer, and did not object at the trial to parol evidence of such fact, he could not object on writ of error that the court erred in not requiring proof of such fact by the certificate in the district revenue collector's office.

6. INTERNAL REVENUE—CRIMINAL PROSECUTIONS.—INSTRUCTIONS.

Accused was indicted for willfully and unlawfully refusing and neglecting to make in his record book, kept as a wholesale liquor dealer, any entry or entries concerning two particular casks of spirits at the time they were sent out. The court charged that if defendant failed or neglected to provide a book in such form as prescribed by the Commissioner of Internal Revenue, and sold as a wholesale liquor dealer any kind of distilled spirits, and at the time of sending out of his stock and possession any of such spirits, and before the same were removed from his premises, to enter in such book the date when and the name and place of business of the person or firm to whom such spirits were to be sent, the kind and quantity of such spirits, he was guilty as charged. In another paragraph the court stated that if defendant in good faith went to the deputy revenue collector for the district and requested instruction as to the keeping of his records, and was instructed to keep them on a sheet of paper until he could

Digitized by Google

procure the prescribed form book, and he in good faith relied on such instructions and so kept his record, he was not guilty. *Held*, that accused by the latter instruction received the full benefit of his claim of good faith, and could not complain of any contradiction in such instructions.

7. CRIMINAL LAW—WRITTEN INSTRUCTIONS—WAIVER.
Where the parties by their interlocution invited the court to deliver oral instructions without objection or exception thereto at the time, defendant waived his right to written instructions, under St. 1893, Okl. § 5196, providing that all instructions given shall be in writing, unless waived by both parties.[1]

8. INTERNAL REVENUE—CRIMINAL PROSECUTIONS—BURDEN OF PROOF.
Since a plea of not guilty puts in issue every fact essential to constitute the offense charged, and the benefit of reasonable doubt in favor of accused extends to every matter offered in evidence for as well as against him, an instruction, in a prosecution of a wholesale liquor dealer for violating the internal revenue law in failing to make proper records of sales, that it was incumbent on defendant to show that he made the entries in a book prescribed by the internal revenue department, or that he made them on a sheet of paper, etc., was erroneous.

9. CRIMINAL LAW—REVIEW—PREJUDICE—PRESUMPTION.
When error is apparent in the record, it is presumptively injurious to the party against whom it has been committed, unless it appears beyond doubt that it did not and could not prejudice his rights.
[Ed. Note.—For cases in point, see Cent. Dig. vol. 15, Criminal Law, §§ 3090-3099.]

10. SAME—NECESSITY OF EXCEPTIONS.
Where accused received a severe punishment, it was the province of the appellate court to correct an error in an instruction as to the burden of proof, prejudicial to accused, though a sufficient exception was not saved thereto.
[Ed. Note.—For cases in point, see Cent. Dig. vol. 15, Criminal Law, § 2668.]

In Error to the Supreme Court of the Territory of Oklahoma.
For opinion below, see 87 Pac. 647.

Buckner & Buckner, for plaintiff in error.
John Embry, U. S. Atty., and Louie E. McKnight, Asst. U. S. Atty.

Before SANBORN and VAN DEVANTER, Circuit Judges, and PHILIPS, District Judge.

PHILIPS, District Judge. The plaintiff in error (hereinafter designated the defendant) was indicted in the District Court for Pawnee county, Okl. Ter., under section 3318, Rev. St. U. S. [U. S. Comp. St. 1901, p. 2164], as a wholesale liquor dealer for failure to make the required entries in a book of two casks of spirituous liquors sold and sent out of his possession on the 6th day of November, 1903. On trial to a jury he was convicted, and sentenced to imprisonment for 1½ years in the federal penitentiary at Leavenworth, Kan., and to pay a fine of $100 and the costs. On appeal to the Supreme Court of the territory the judgment was affirmed.

The sufficiency of the indictment was challenged both by demurrer and motion in arrest of judgment. We do not deem it necessary or important to consider many of the objections raised. The principal

[1] See note at end of case.

Digitized by Google

objection is that the indictment is wanting in specification, descriptive of the quality and kind of liquors sold and sent out, and to whom sent. The charge in this respect is that:

"On the 6th day of November, 1903, the said Matt Williams, as said wholesale liquor dealer as aforesaid, did then and there send out of his stock and possession certain distilled spirits, to wit, two casks of distilled spirits, and did willfully and unlawfully refuse and neglect to make in the said book any entry or entries whatsoever (said book having been described in the preceding part of the indictment) concerning said casks of spirits respectively at the respective time of so sending the same out of his stock and possession, and before the same were removed respectively from his premises."

Said section of the statute requires every wholesale liquor dealer to provide a book, to be prepared and kept in such form as may be prescribed by the Commissioner of Internal Revenue, and shall, on the same day on which he receives any foreign or domestic spirits, and before he draws off any part thereof, enter in such book, etc. It further declares that:

"Every such * * * wholesale dealer shall, at the time of sending out of his stock or possession any spirits, and before the same are removed from his premises, enter in like manner in the said book the day when and the name and place of business of the person or firm to whom such spirits are to be sent, the quantity and kind or quality of such spirits, the number of gallons, * * * the name of the distiller and the serial number of the package. Every such book shall be at all times kept in some public place on the premises of such * * * wholesale dealer for inspection, and any revenue officer may examine it and take an abstract therefrom."

The penalty provided for neglect in the above requirements is a fine of not less than $100 nor more than $5,000, and imprisonment not less than three months nor more than three years.

It will be observed from the foregoing statute that, whenever such wholesale dealer sends out "any spirits," he is required to make the specified entry in the designated book. The charge in the indictment is that the defendant sent out, etc., certain casks of spirits, to wit, two casks of distilled spirits. The term "cask" is generally understood to be a receptacle for liquids. It may be less or larger than the usual barrel. As employed in the statute respecting the manufacture and sale of spirituous liquors, pertaining to wholesale dealers, a cask has a well-recognized import. In section 3287 [page 2130], touching the duty of distillers, it is said:

"All distilled spirits shall be drawn from the receiving-cisterns into casks, each of not less capacity than twenty gallons wine measure."

Section 3295 [page 2135], respecting the gauging, stamping, and branding of spirits removed from warehouses, the language is, "Whenever an order is received from the collector for the removal from any distillery warehouse of any cask of distilled spirits," evidently having reference to casks containing not less than 20 gallons wine measure. Section 3319 [page 2165], declares that it shall be unlawful for any rectifier, etc., or wholesale or retail liquor dealer, to purchase or receive any distilled spirits in quantities greater than twenty gallons from any person other than an authorized rectifier of distilled spirits, distiller, or wholesale liquor dealer. Section 3323 [page 2167] provides that all distilled spirits drawn from any cask or package and placed in any

Digitized by Google

other cask or package containing not less than ten gallons, and intended for sale, shall be again inspected and gauged. Section 3324 [page 2168] provides for the effacement of stamps and brands from empty casks. Section 3325 [page 2169] provides that whenever any person knowingly purchases or sells, with inspection marks thereon, any cask or package, after the same has been used for distilled spirits, he shall forfeit and pay, etc. Section 3244 [page 2096] defines a wholesale liquor dealer to be a "person who sells or offers for sale foreign or domestic distilled spirits or wines, in quantities of not less than five wine gallons at the same time." The indictment having alleged that at the time in question the defendant was a wholesale liquor dealer, it was tantamount to a direct averment that the casks contained each not less than 5 wine gallons of spirituous liquors. The statute in question makes it an offense for such wholesale dealer to send out of his stock or possession any spirits without making the required notation in the manner prescribed. As he is only authorized to deal as a wholesaler, the law assumes he did not sell or send out in casks containing less than five wine gallons. The statute interdicts and penalizes the sending out of any spirits without complying with said requirements. The quantity, whether 5 or 50 gallons, neither qualifies nor designates the offense; the implication, however, being that he does not send out in casks containing less than 5 wine gallons. It is not essential to specify in the indictment the name of the person to whom, or the place where, the casks were sent. That was mere matter of evidence, and not of the substance of the offense. Of all men the defendant knew to whom and where he had sent the casks; and, if he desired information from the prosecution, he could have protected himself against surprise at the trial by demanding in advance a bill of particulars. The indictment was sufficient. Ledbetter v. United States, 170 U. S. 606, 18 Sup. Ct. 774, 42 L. Ed. 1162; Pounds v. United States, 171 U. S. 35, 18 Sup. Ct. 729, 43 L. Ed. 62.

The contention is made on behalf of the defendant that the court erred in admitting parol testimony to prove that the defendant was a wholesale liquor dealer; that the best, if not the only, evidence of the fact, is the certificate from the proper district revenue collector's office, commonly called a "license." It is sufficient to say of this that parol evidence was admitted without objection on the part of the defendant. Indeed, he admitted on the trial that he was a wholesale liquor dealer. As he was exercising the office of such dealer, the presumption is that he was acting rightfully. His license was in his own possession, if one had been issued. If he had no license, he was wrongfully engaged in the wholesale liquor business, and he knew it. He could only show this by developing the fact that he was amenable to indictment and punishment for a graver offense. Why should the government be required to produce the record showing that the defendant was licensed as a wholesale liquor dealer when oral proof of the fact was admitted nem con? The offense with which the defendant was charged is that he "did willfully and unlawfully refuse and neglect to make in the said book any entry or entries whatsoever, concerning said casks of spirits" at the time the same were sent out.

Digitized by Google

The defendant's testimony, which in some important particulars is not without corroboration, was that he was engaged in this business between three and four months; that he was unfamiliar with the requirements of the statute respecting the manner of keeping the book; that before beginning business he inquired of the deputy revenue collector of the district about obtaining the book and how to keep it; that said deputy informed him that he could get one from a house in Cincinnati; that he was advised by this officer that he could keep memoranda of liquors received and sent out, in an informal way, on slips or sheets of paper, and he could enter the same formally in the book when obtained; that he went to Cincinnati and tried to obtain the book at a wholesale house, but failed; that he made entries on pieces of paper in the manner directed, intending to transfer them into the book when obtained. His testimony further tended to show that he bought some of the liquors from a house represented by one Fechtler, who seems to have instigated this prosecution against the defendant because of his bankruptcy, whereby loss came to his house. Fechtler visited the defendant after he began business, and advised him about how to make out his reports to the district collector; and the defendant testified that he kept memoranda of liquors received and sent out on slips or sheets of paper as directed, which he turned over to said Fechtler, who made out therefrom the reports to said collector, which reports were received and he was advised were satisfactory. Those memoranda were not returned to the defendant.

In its charge the court, in paragraph 6, instructed the jury, in substance, that if they found from the evidence beyond a reasonable doubt that the defendant was a wholesale liquor dealer at the time mentioned in the indictment, that he failed or neglected to provide a book in such form as prescribed by the Commissioner of Internal Revenue, and that he sold as a wholesale liquor dealer any kind of distilled spirits and at the time of sending out of his stock and possession any of said spirits and before the same were removed from his premises to enter in said book the day when and the name and place of business of the person or firm to whom such spirits were to be sent, the kind and quantity of such spirits, he was guilty as charged in the indictment, and the jury should so find. Then in paragraph 8½ the court further instructed the jury to the effect that if they believed from the evidence that the defendant in good faith went to Howard, the deputy revenue collector for the district in which he was about to begin the wholesale liquor business, and requested of him instruction as to the manner in which he should keep his records, and said Howard instructed him to keep them on a sheet of paper until he could procure the prescribed formbook, and that he in good faith relied upon such instructions and did keep his records on a sheet of paper as the law requires, the jury should find him not guilty. Viewed in their relation to each other, the defendant is in no position to complain of any seeming contradiction in said instructions, as it must be conceded he obtained in the latter declaration the full benefit of his claim of good faith. As indicating that the jury did not understand that the sixth instruction precluded them from considering the memoranda entries made on sheets or slips of paper, after retiring to con-

Digitized by Google

sider of their verdict, they returned into court and made inquiry of the judge as to whether or not they could consider "the other papers as from other sources, the larger pieces of paper." Whereat the judge repeated to them the substance of his former charge as above indicated, with perhaps more fullness and perspicuity. Had the court observed the letter of the statute of the territory, which requires all instructions to be given in writing, it would doubtless have avoided the confusion and some contradiction that ensued by the court suffering interruptions of the respective counsel and engaging in some extended colloquy with them in the presence of the jury, injecting into the case some inconsiderate language and misdirection. After restating the substance of its first charge respecting the requirements of the statute and the effect of the claimed good faith on the part of the defendant, the court said:

"The court instructs the jury that it is incumbent upon the defendant to show that he made these entries in a book prescribed by the internal revenue department, and to show that he made these entries as the law requires, upon a sheet of paper, and that those were preserved and open for the inspection," etc.

It is assigned for error that the foregoing instructions were given orally; whereas, the statute of the Territory of Oklahoma (section 5196, St. 1893) declares that:

"All instructions given shall be in writing, unless waived by both parties, and shall be filed and become a part of the record in the case."

There is contrariety of view in the courts of California and Alabama in applying similar statutes, as to whether or not the failure to object and except at the time of the giving of oral instructions constitutes a waiver or is reversible error. See People v. Beeler, 6 Cal. 246; People v. Payne, 8 Cal. 341; People v. Sanford, 43 Cal. 35, contra; Abbott v. City of Mobile, 119 Ala. 595, 24 South. 565.

Suffice it to say that we incline to the generally accepted rule that under circumstances like these in the record before us, where the parties by their interlocution invite the court to deliver oral instructions, without objection or exception thereto at the time, they should be held to have waived the right to written instructions. The office of such timely objection is the spirit of fair play, to accord to the court a locus pœnitentiæ to correct the error then and there. This is in the interest of the advancement of justice to avoid new trials and the prolonging of litigation. The court, however, in our judgment, committed a radical error in charging the jury that:

"It is incumbent upon the defendant to show that he made these entries in a book prescribed by the internal revenue department, or to show that he made these entries as the law requires, upon a sheet of paper," etc.

It is the settled law in criminal procedure that the burden of proof never shifts from the prosecutor to the defendant. It remains throughout with the government. The plea of not guilty is unlike a special plea in civil actions, which, admitting the case averred, seeks to establish substantive grounds of defense. It is a plea that puts in contestation every fact essential to constitute the offense charged. And the benefit of a reasonable doubt in favor of the accused extends to every

Digitized by Google

matter offered in evidence for as well as against him. Glover v. United States, 147 Fed. 426, 77 C. C. A. 450; 1 Greenleaf's Evidence, § 74, note; State v. Wingo, 66 Mo. 181, 27 Am. Rep. 329; Commonwealth v. McKie, 1 Gray (Mass.) 61, 65, 61 Am. Dec. 410. It is the rule of law of this jurisdiction, often repeated, that, when error is apparent in the record, it was presumptively injurious to the party against whom it was committed, "unless it appears beyond doubt that the error did not and could not prejudice the rights of the party." Vicksburg R. R. Co. v. O'Brien, 119 U. S. 99, 7 Sup. Ct. 118, 30 L. Ed. 299; National Biscuit Company v. Nolan, 138 Fed. 9, 70 C. C. A. 436; State v. Russell, 90 Iowa, 569, 58 N. W. 915, 28 L. R. A. 195; People v. N. Y. C. Railway, 29 N. Y. 430; State v. Cooper, 45 Mo. 64.

Without discussing the question suggested as to whether or not there was sufficient exception saved to this instruction, it is sufficient to say that in a criminal case where a plain error is committed in a matter vital to the defendant, especially in a case like this, where the defendant received the severe punishment of one year and six months in the penitentiary in addition to the fine, it is the province of the appellate court to correct it. Wiborg v. United States, 163 U. S. 633, 656, 16 Sup. Ct. 1127, 41 L. Ed. 289; Clyatt v. United States, 197 U. S. 207, 221, 222, 25 Sup. Ct. 429, 49 L. Ed. 726.

It results that the judgment of the District Court and the judgment of the Supreme Court of the territory of Oklahoma are reversed, and the cause is remanded to the said District Court with directions to grant a new trial.

NOTE.

Waiver of Objections to Instructions in Criminal Prosecutions.

I. In General.

[a] Where defendant failed to call the court's attention at the trial to an omission to charge on a particular matter, he cannot subsequently object to such omission.

—(N. C. 1882) State v. Reynolds, 87 N. C. 544;
(S. C. 1888) State v. Davis, 27 S. C. 609, 4 S. E. 567.

[b] (Conn. 1902) In a prosecution for murder, an alleged accomplice testified that defendant had expressed an intention to conceal money taken from the murdered man in the cellar of a house in which both defendant and the accomplice resided, and there was evidence that the two were together for some time shortly after the killing. Defendant claimed that the evidence as to finding the money in the cellar was explainable on the theory that the accomplice committed the crime alone, told defendant of it, and defendant helped him to conceal it, and concealed the money. *Held*, that the necessity for a correct instruction on such theory was not obviated by the fact that counsel for defendant in his argument presented the theory only as an assumption, a possible theory, in which he disclaimed all belief or confidence, inasmuch as he denied any guilty knowledge on the part of defendant.—State v. Gallivan, 75 Conn. 326, 53 Atl. 731.

[c] (Fla. 1901) A failure until after verdict to except to an omission or refusal of the court to sign the instructions as required by statute is a waiver of such requirement.—Easterlin v. State, 31 South. 350.

[d] (Fla. 1903) Where the trial judge fails to officially sign the charges to the jury in compliance with Rev. St. 1892, and there is no complaint of his failure to do so until after verdict, the irregularity is waived.—Weightnovel v. State, 35 South. 856.

Digitized by Google

[e] (Ill. 1907) In a criminal prosecution, where, after the court had refused a certain requested instruction and marked the same "Refused," he suggested to counsel for defendant that if counsel would make a certain modification in the instruction it would be given to the jury, upon which suggestion counsel acted, and the instruction as thus modified was given, defendant could not urge that instruction as originally drawn stated a correct proposition of law, and as modified was erroneous.—Morrello v. People, 226 Ill. 388, 80 N. E. 903.

[f] (La. 1901) Objection to the charge comes too late when urged for the first time in an application for a new trial.—State v. West, 105 La. 639, 30 South. 119.

[g] (Me. 1851) A request, by a defendant in a criminal prosecution, that the court would instruct the jury upon a legal point which was relied on in the defense, precludes him from objecting to the right of the court to instruct the jury, though unfavorably to him, upon that point.—State v. Madison, 33 Me. 267.

[h] (Mass. 1875) In a charge to the jury, on a criminal trial, no exception lies to the modification of an instruction prayed for, if the defendant has neglected to avail himself of a request seasonably made by the presiding judge that any misstatement of the rulings or prayers for instructions be corrected at the close of the charge.—Commonwealth v. Costley, 118 Mass. 1.

[i] (Mich. 1872) Where one of two defendants jointly tried for conspiracy made no objection, at the trial, that a correct instruction in their favor was framed so as to apply to his co-defendant only, he cannot thereafter complain thereof.—People v. Saunders, 25 Mich. 119.

[j] (Mo. 1891) Although under Rev. St. § 1908, requiring the court to instruct the jury upon all questions of law arising in the case, it is the defendant's right to have the court instruct the jury on all lower grades of the offense charged in the indictment, he waives his right by asking that the jury be confined to the exact offense charged in the indictment, and the failure to instruct as to the lower grade of offense is not error.—State v. Keele, 105 Mo. 38, 16 S. W. 509.

[k] (Mo. 1895) Failure of the court to define what is a conspiracy, or to instruct on lower grades of homicide than murder in the second degree, is waived by failure to except on the ground that the court had not, as required by Rev. St. 1889, § 4208, instructed on all questions of law necessary for the information of the jury.—State v. Paxton, 126 Mo. 500, 29 S. W. 705.

[l] (Mo. 1901) Exception not having been taken at the time the instructions were given, because the court had failed to instruct on all questions in issue, it will be held waived.—State v. Westlake, 159 Mo. 669, 61 S. W. 243.

[m] (N. Y. 1874) A prisoner will not be allowed to assert error in a charge of a judge when the charge in question was one made at his own request. —Slattery v. People, 1 Hun, 311.

[n] (Pa. 1905) After verdict of conviction, defendant cannot complain that the trial judge misquoted the testimony of a witness in a material point, in referring to it.—Commonwealth v. Razmus, 210 Pa. 609, 60 Atl. 264.

[o] (S. C. 1895) Where the prisoner's counsel informed the court that it was only necessary to charge on the crime of murder, and after the charge stated that the same was satisfactory, objection that the court failed to charge that a special verdict might be found recommending defendant to the mercy of the court is unavailable.—State v. Owens, 44 S. C. 324, 22 S. E. 244.

[p] (Tex. 1904) Under Code Cr Proc. 1895, art. 723, requiring errors in instructions to be excepted to at the trial or in motion for a new trial, error in charging on the weight of the evidence is waived when not excepted to.—Martin v. State (Cr. App.) 83 S. W. 390.

[q] (Wash. 1905) Any error in instructions in a criminal case is waived by failure to except to them.—State v. Bringgold, 40 Wash. 12, 82 Pac. 132.

II. Oral Instructions.

[a] (Cal. 1864) It is error to give oral instructions to the jury, in a criminal case, without the consent of the defendant, although he is present and does not object.—People v. Chares, 26 Cal. 78.

Digitized by Google

[b] (Ind. 1896) Though, on request, all instructions should be in writing, where defendant agreed in open court that certain papers and statutes might be read and certain remarks made orally to the jury, as part of the instructions, he cannot complain on appeal that the instructions were not in writing.—Voght v. State, 145 Ind. 12, 43 N. E. 1049.

[c] (Iowa, 1864) A defendant, in a criminal case, cannot object that the charge of the court was given to the jury orally, and afterwards reduced to writing, if he consented to this irregularity.—State v. Sipult, 17 Iowa, 575.

[d] (Mont. 1900) Since Pen. Code, § 2070, requires the court to charge the jury in writing, and forbids oral instructions unless by agreement of both the state and the accused, mere silence of the accused or his counsel is not equivalent to a consent to the giving of oral instructions.—State v. Fisher, 23 Mont. 540, 59 Pac. 919.

[e] (Tenn. 1874) Counsel for defendant, by consenting that the court charge the jury verbally, waives the requirement of Laws 1873, c. 57, that the charge shall be in writing.—State v. Bungardner, 66 Tenn. (7 Baxt.) 163.

(161 Fed. 1.)

THE TREMONT.

(Circuit Court of Appeals, Ninth Circuit. February 24, 1908.)

No. 1,454.

1. COLLISION—STEAMSHIPS IN FOG—MUTUAL FAULTS.

A finding of the trial court that a collision between the steamships Tremont and Ramona off Marrowstone Point near Port Townsend was due to faults of both vessels affirmed.

[Ed. Note.—For cases in point, see Cent. Dig. vol. 10, Collision, § 40.

Collision rules. Speed of steamers in fog, see note to The Niagara, 28 C. C. A. 532.]

2. SAME—DAMAGES RECOVERABLE—LOSS OF EARNINGS.

In finding the damages recoverable by a vessel injured in a collision as she was starting on a voyage an allowance cannot be made for loss of earnings in carrying the mails on the voyage, which were withdrawn on account of the delay caused by her injuries, and sent by another vessel where there is no evidence from which it can be ascertained with reasonable certainty what profit she would have made from such carriage.

[Ed. Note.—For cases in point, see Cent. Dig. vol. 10, Collision, § 282.]

3. SAME—EXPENSES DURING DELAY FOR REPAIRS—DEMURRAGE.

The expenses of a vessel during the time she was delayed in repairing injuries caused by a collision, such as wages of the crew, provisions, and the like are properly allowable as damages resulting from the collision, but insurance premiums and general office and agents' expenses during that time are not proper elements of such damages. The fixing of the per diem demurrage during such time on the basis of the vessels average daily earnings during three consecutive voyages *held* not prejudicial to such vessel.

[Ed. Note.—For cases in point, see Cent. Dig. vol. 10, Collision, § 283.]

Appeal from the District Court of the United States for the Northern Division of the Western District of Washington.

W. H. Bogle and Charles P. Spooner, for appellant.

Samuel H. Piles, James B. Howe, and Charles H. Farrell, for appellee.

Before GILBERT, ROSS, and MORROW, Circuit Judges.

Digitized by Google

ROSS, Circuit Judge. This appeal grew out of a collision between the steamship Tremont and the steamer Ramona off Marrowstone Point, near Port Townsend, Wash., during a heavy fog. The trial court found both steamers in fault in certain specified particulars, and that the fault of each contributed to the collision; accordingly, it followed the established rule of dividing the damages. A careful consideration of the record satisfies us that there was abundant evidence to sustain the findings. No useful purpose would be served by reviewing it.

It is contended for the appellant that in fixing the damages sustained by the Tremont the court should have allowed as loss in the earnings of the voyage on which she was at the time bound what she would have earned by carrying the mails that were on board, and which mails, the record shows, were withdrawn by the government officials, and sent forward by other steamers because of the collision and consequent interruption of the Tremont's voyage. We would be disposed to sustain this contention of the appellant if there was any evidence from which the profits that would have been derived by the Tremont from carrying the mails so withdrawn could be arrived at with reasonable certainty; but there is no such evidence. The testimony of the witness Stewart, cited by the appellant to that point, is altogether too indefinite and uncertain.

The case shows that the Tremont was delayed 4 days in making temporary repairs, after which she completed the voyage in which she was engaged at the time of the collision, then made two other voyages, after which permanent repairs upon her were made, consuming with the 4 days, during which the temporary repairs were made, a total of 18 days. The record further shows that the voyage here in question occupied 3 days longer time than the immediately preceding similar voyage of the Tremont, during which her average net proceeds were $328.44 per day, but was made in 5 days' shorter time than the immediately succeeding similar voyage of the steamer, during which her average net profits were $221.47 per day, whereas during the intermediate voyage—that in question—her average net earnings per day were only $91.49. In fixing the demurrage for the 18 days during which the Tremont was laid up for repairs, the court below allowed the net average earnings per day for the three voyages; that is to say, $213 a day. Whether the facts were such as to justify a resort to an average of the net earnings of the three voyages has not been challenged by an appeal on the part of the Ramona. We think the Tremont has no just ground of complaint on that ground.

In addition to the daily demurrage of $213 allowed by the court below, the appellant was also allowed the expense of the ship during the 18 days, such as wages of the crew, provisions, and the like, but the court below correctly refused, in our opinion, any allowance for insurance premiums and general office and agents' expenses during that period.

The judgment is affirmed.

Digitized by Google

(161 Fed. 260.)

In re FRIEDMAN et al.

(Circuit Court of Appeals, Second Circuit. April 14, 1908.)

No. 211.

1. APPEAL—RECORD—SUFFICIENCY.
   A record on appeal is defective where it fails to give the filing date of several orders contained in it.

2. BANKRUPTCY—RIGHTS OF THIRD PERSONS—SUMMARY PROCEEDINGS—JURISDICTION OF DISTRICT COURT.
   The District Court had jurisdiction in a bankruptcy proceeding to make a summary order directing third persons to pay over to the temporary receiver sums of money which they claimed they did not have or which they claimed were their own property.

3. SAME.
   Persons summarily ordered in a bankruptcy proceeding to turn money over to the temporary receiver as belonging to the bankrupt may not complain that they were given no opportunity to call witnesses in their own behalf or cross-examine those testifying against them, where they presented their own affidavits and might have presented as many other affidavits as they pleased, where the testimony against them was in part their own; giving them as full opportunity to explain it under oath as if their own counsel were cross-examining them orally; where they made no request to cross-examine other witnesses against them nor that they be examined or cross-examined; and where, after being advised by the order to show cause of the claim made against them, they had every opportunity to make their own presentation of the facts, and to make any objection to the testimony referred to in such order to show cause.

4. SAME—REVIEW—OBJECTION NOT MADE BELOW.
   On petition to review an order directing petitioners to pay money to a temporary receiver in bankruptcy, they may not complain for the first time that a copy of the testimony taken under Bankr. Act July 1, 1898, c. 541, § 21a, 30 Stat. 552 (U. S. Comp. St. 1901, p. 3430), providing for the examination of persons respecting acts of a bankrupt, was not served with the order to show cause why the order directing the payment should not be made. The objection should have been made at or before the argument in the District Court.

Petition for Revision of Proceedings of the District Court of the United States for the Southern District of New York, in Bankruptcy.

For opinion below, see 153 Fed. 939.

This cause comes here upon petition to review an order of the District Court, dated April 13, 1907, directing petitioners to pay over to the temporary receiver certain sums of money.

Emanuel Herz, for petitioners.

William Lesser, for respondent.

Before LACOMBE, WARD, and NOYES, Circuit Judges.

LACOMBE, Circuit Judge. On March 22, 1907, an involuntary petition in bankruptcy was filed against Abraham Friedman, and a temporary receiver was appointed. The record submitted on this appeal is defective, in that it fails to give the filing dates of several of the orders contained in it, but it is apparent that receiver was appointed promptly probably on the day petition was filed. Adjudication of bankruptcy followed on April 4, 1907.

Digitized by Google

An order was obtained under Act July 1, 1898, c. 541, § 21a, 30 Stat. 552 (U. S. Comp. St. 1901, p. 3430), for the examination of various persons, including these petitioners Celia Friedman, Max Levinson, and Samuel Wiltchik, who attended and were examined on March 26th, 27th, 28th, and 29th. It developed that on the night of March 17, 1907, the bankrupt, a shoe dealer, sold his entire stock, receiving therefor $3,850. His wife was present, and it is not disputed that at one time, while counting it, she had the money in her possession. For a further statement of the facts reference may be had to In re Friedman (D. C.) 153 Fed. 939.

On March 27th an order was made requiring Celia Friedman to show cause why an order should not be made requiring her to turn over forthwith to the temporary receiver the sum of $3,850. On March 28th a like order was made requiring the Jenkins Trust Company, Max Levinson, and Samuel Wiltchik to turn over to the receiver the proceeds alleged to be in their possession of the sales made by the bankrupt. These orders to show cause were upon the testimony taken as aforesaid of Celia Friedman, of Max Levinson, her brother, William Herrman, a notary public, and Harris Perlmutter, an auctioneer. After an adjournment the motion came on for a hearing on April 8th, petitioners appearing by counsel and filing each an affidavit in opposition. On April 13th the District Court made and entered the order now sought to be reviewed. Pending proceedings to review new counsel have been substituted for petitioners.

It is contended that the District Court had no power to make a summary order directing third parties to pay over to the temporary receiver sums of money which they insisted they did not have or were their own property. There is no indication anywhere in the record that these petitioners raised any objection to the jurisdiction of the bankruptcy court to determine the question whether the several sums of money were or were not the property of the bankrupt, nor objected that the question could not be determined summarily. Many cases are cited on the briefs; but it is unnecessary to discuss them. Whatever might have been our own views on the general exercise of summary proceedings to seize hold of property which, before the petition in bankruptcy was filed, was in the actual possession of third persons who assert that they own it (In re Baudouine, 101 Fed. 574, 41 C. C. A. 318), we are concluded by the language of the Supreme Court in Mueller v. Nugent, 184 U. S. 1, 22 Sup. Ct. 269, 46 L. Ed. 405. In that case money which the bankrupt had collected a short time before bankruptcy was in the hands of his son, and the bankruptcy court made a summary order directing him to turn it over. The son did not make any specific claim of title to the property, merely insisting that he should not be called upon thus summarily to give it up, when he had it in his individual possession before bankruptcy. The court said:

"But suppose that respondent had asserted that he had the right to possession by reason of a claim adverse to the bankrupt, the bankruptcy court had power to ascertain whether any basis for such claim actually existed at the time of the filing of the petition. The court would have been bound to enter upon that inquiry, and in doing so would have undoubtedly acted with-

Digitized by Google

in its jurisdiction, while its conclusion might have been that an adverse claim, not merely colorable, but real even though fraudulent and voidable, existed in fact, and so that it must decline to finally adjudicate on the merits. If it erred in its ruling either way, its action would be subject to review."

Much is made in argument of the proposition that petitioners were given no opportunity to call witnesses in their own behalf or to cross-examine such witnesses as testified against them. The facts do not warrant such argument. Petitioners presented their own affidavits, and might have presented the affidavits of as many other persons as they pleased. The testimony against them was in part their own, which they had as full opportunity to explain under oath as if their own counsel were cross-examining them orally. As to the testimony of the notary public and the auctioneer, no request to be allowed to cross-examine them was made. It must be assumed that such a reasonable request would have been granted by the District Court had it been made. The case differs fundamentally from In re Rosser, 4 Am. Bankr. Rep. 153, 101 Fed. 562, 41 C. C. A. 497, where the bankrupt never had any opportunity to show cause why he should not be ordered to turn over certain money. It was stated on the argument, and not denied, that the petitioners were personally in court on the return of the order to show cause and on the argument, but no request was made to the court to examine or cross-examine them or to refer the matter for further examination. After being advised by the order to show cause of the claim made against them, they had every opportunity to make their own presentation of the facts, and to make any objection they might be advised to the testimony referred to in such order to show cause. The objection now made that a copy of the testimony taken under section 21a was not served with the order to show cause comes too late. It should have been made at or before the argument in the District Court.

We have examined the testimony and affidavits, and may state that, if the issues of fact were properly before us, we would be inclined to decide them as the District Court has.

The order is affirmed, but, as this petition to review was heard in forma pauperis, without costs.

(161 Fed. 262.)

GRAHAM v. OREGON R. & NAV. CO.

(Circuit Court of Appeals, Second Circuit. April 14, 1908.)

No. 123.

1. EVIDENCE—COMMUNICATIONS BETWEEN AGENTS.
   In an action for breach of a contract, communications between respondent's agents were inadmissible to affect libelant.

2. CONTRACTS—EXECUTION—EVIDENCE—SUFFICIENCY.
   Evidence *held* insufficient to show that libelant and respondent made an agreement for an exclusive interchange of traffic for three years between libelant's steamships and respondent's railroad.

Appeal from the District Court of the United States for the Southern District of New York.

For opinion below, see 145 Fed. 718.

Digitized by Google

Thomas D. Rambaut and J. Parker Kirlin, for appellant.
Maxwell Evarts, for appellee.

Before LACOMBE, WARD, and NOYES, Circuit Judges.

WARD, Circuit Judge. The question in this case is whether the libelant and the respondent made an agreement for an exclusive interchange of traffic for the term of three years between the libelant's line of steamships, running between Portland, Or., and the Orient, and the respondent's railroad, running to Portland. The libelant did establish such a line, and there was an interchange of traffic between it and the railroad from September, 1900, to March or April, 1901, when the respondent put its own line of steamships on the service. The district judge dismissed the libel.

We agree with the libelant that the letter of the respondent's traffic manager, Campbell, dated November 12, 1900, to Judge Cotton, the respondent's general attorney, and the telegrams between Campbell and Miller, respondent's freight agent, dated December 3 and 4, 1900, should have been excluded as transactions between respondent's agents not affecting the libelant in any way. But, excluding these documents from consideration, we still come to the same conclusion as did the district judge. The fair inference to be drawn from the testimony is that the libelant, while contemplating the establishment of his line, was confirmed in his purpose by the confident belief that he could make an exclusive three year traffic agreement with the respondent. Oral negotiations during which each party is thinking principally of the things most important to his own needs and nearest to his own wishes are apt to result in different accounts of what was said. Many, though not all, of the inconsistencies in the testimony may be explained in this way, and in the case of the libelant it is likely that long brooding over his disappointment and loss has disturbed his recollection of the conversations with the respondent's agents.

The conduct of the respondent upon which the libelant greatly relies as a ratification of the contract, even if made without authority by Campbell, throws no light upon the disputed question, because this ratification is just as applicable to a temporary arrangement as to a contract for three years.

Because of the very able and earnest argument made on behalf of the libelant, we will indicate briefly the considerations which lead us to the conclusion that no such contract as the libelant alleges was made. (1) The libelant went to Portland with a view to establishing a line of steamships, and had been encouraged by Mr. Wilcox, president of a flour mills company able to furnish nearly full cargoes, at whose suggestion he approached the respondent. (2) The respondent was at the time negotiating for steamships to replace the Dodwell Line. (3) Campbell, the respondent's traffic manager, with whom the libelant negotiated is not shown to have had authority to make such a contract as is alleged. (4) No contract or memorandum was signed either by the libelant or by Campbell. (5) It is admitted that the signature of the respondent's president must be had to the contract. (6) If a contract had actually been made like the Dodwell contract, originally drawn up by Campbell, which had been in force three years, it would

Digitized by Google

not have been necessary to consult the law department. (7) If it was necessary to consult the law department, it is fair to presume that the minds of the parties had not fully met. (8) The libelant made no protest against the expression contained in the telegrams inclosed in respondent's letter of November 28, 1900, describing the arrangement as "a proposed agreement." (9) In the elaborate correspondence between March 1st and 15th resulting in a termination of all relations, no reference whatever was made to an existing contract for three years. (10) The libelant made no protest against the respondent's conduct as a breach of a concluded contract nor any demand founded upon such a contract until long after. (11) On the contrary, he suggested selling or chartering his steamships to the respondent or retiring from the field as a competitor for a consideration.

The decree is affirmed, with costs.

(161 Fed. 264.)

DEMAREST v. DUNTON LUMBER CO.

(Circuit Court of Appeals, Second Circuit. April 14, 1908.)

No. 179.

1. ASSIGNMENTS—PERSONAL CONTRACT—ASSIGNABILITY.

A contract by which defendant lumber company sold to K. & Co. its entire cut of white pine lumber for 1901, except so much as it should need for its retail trade in a certain city, agreeing to retain only an average grade for the same, payment to be made within 10 days from date of invoice, and K. & Co. to take some lumber shorter than 12 feet and some longer than 16 feet, involved matters of personal confidence between defendant and K. & Co., and therefore was not assignable, under the rule that a contract personal in its nature cannot be assigned by one party without the consent of the other.

[Ed. Note.—For cases in point, see Cent. Dig. vol. 4, Assignments, §§ 28-31.]

2. SAME—CONSENT TO ASSIGNMENT—EVIDENCE.

Evidence *held* insufficient to establish the ratification by the seller of an assignment of a contract for the sale of lumber.

In Error to the Circuit Court of the United States for the Southern District of New York.

For opinion below, see 151 Fed. 508.

McKelvay & Mattocks (John J. McKelvay, of counsel), for plaintiff in error.

Rounds, Hatch, Dillingham & Debevoise (Ralph S. Rounds, of counsel), for defendant in error.

Before LACOMBE, COXE, and WARD, Circuit Judges.

WARD, Circuit Judge. The plaintiff sues as assignee of a contract dated December 11, 1900, between W. E. Kelley & Co. and the Dunton Lumber Company, and complains that the defendant has failed and refused to deliver to him lumber covered by the contract. Under the contract the lumber company sold to Kelly & Co. the entire cut of white pine lumber for 1901, except so much as it should need for its retail trade in the city of Rumford Falls, agreeing to retain, not the best

Digitized by Google

of the lumber, but only an average grade for that trade. Delivery was to be f. o. b. cars at Rumford Falls, Kelly & Co. to pay within 10 days from date of invoice. The logs were to be cut in lengths of 12, 14, and 16 feet; but Kelly & Co. agreed to accept some lumber shorter than 12 feet, not less than 8 feet, and some longer than 16 feet. The trial judge held that this contract was not assignable, and that, therefore, the plaintiff had no right of action.

While the authorities do not differ as to the principle that a contract personal in its nature cannot be assigned by one party without the consent of the other, they differ in the application of the principle; the question in each case being whether the contract is personal or not. The law on the subject for the federal courts has been laid down by the Supreme Court in Arkansas Smelting Company v. Belding Mining Company, 127 U. S. 379, 387, 8 Sup. Ct. 1308, 32 L. Ed. 246, in which Mr. Justice Gray said:

"At the present day, no doubt, an agreement to pay money, or to deliver goods, may be assigned by the person to whom the money is paid or the goods are to be delivered, if there is nothing in the terms of the contract, whether by requiring something to be afterwards done by him, or by some other stipulation, which manifests the intention of the parties that it shall not be assignable. But every one has a right to select and determine with whom he will contract, and cannot have another person thrust upon him without his consent. In the familiar phrase of Lord Denman: 'You have the right to the benefit you anticipate from the character, credit, and substance of the party with whom you contract.' Humble v. Hunter, 12 Q. B. 310, 317; Winchester v. Howard, 97 Mass. 303, 305, 93 Am. Dec. 93; Boston Ice Co. v. Potter, 123 Mass. 28, 25 Am. Rep. 9; King v. Batterson, 13 R. I. 117, 120, 43 Am. Rep. 13; Lansden v. McCarthy, 45 Mo. 106. The rule upon this subject, as applicable to the case at bar, is well expressed in a recent English treatise: 'Rights arising out of contract cannot be transferred, if they are coupled with liabilities, or if they involve a relation of personal confidence such that the party whose agreement conferred those rights must have intended them to be exercised only by him in whom he actually confided.' Pollock on Contracts, 425."

The contract under consideration is not merely for the sale of personal property for cash, but implies confidence in Kelly & Co., because they were to have 10 days' credit after title to the lumber passed to them, and because the amount of lumber shorter or longer than the lengths provided for in the contract which they were to accept was not fixed. So, also, the amount of lumber the lumber company needed for its retail trade was not fixed, and that amount, as well as the grade of lumber retained, were subjects which the lumber company might have been willing to leave open with Kelly & Co., but not with their assigns. The rights of Kelly & Co. were coupled with liabilities and involved personal confidence. See, also, Snow v. Nelson (C. C.) 113 Fed. 353.

The plaintiff did not rely upon the assignability of the contract alone, but alleged in the complaint that it was assigned, and Van Horn (plaintiff's assignor) substituted in place of Kelly & Co. with the approval and consent in writing of the lumber company. The evidence relied on to sustain these allegations is all documentary, and we agree with the trial judge that it fails to do so. Some of the letters, taken alone, indicate a consent; but, read all together, the conclusion that the lumber company never assented to the assignment, and that Kelly

Digitized by Google

& Co. acquiesced in its refusal to do so, is irresistible. In the letter of March 21, 1903, written to the lumber company after it had refused to make further deliveries, Kelly & Co. say, among other things:

"We have a contract with you under date of the 11th day of December, 1900, whereby you agreed to furnish us a specific amount of lumber during the year 1901. * * * We hold that you have no right to nominate the party with whom you will or will not do business as our representative, and we now say to you that we will hold you for any damages that may arise or have arisen from the fact of your not having furnished this lumber to us in the time in which you agreed to furnish it. * * * We state again all we want is that you shall fill your contract with us and we will do the same with you, and if you refuse to do it you may as well understand first as last that we will endeavor to make you pay damages as well as fill the contract. We trust you will see the matter as we do, but if you do not care to consider it in a reasonable manner, you may begin action, or we will, and the sooner the better."

The judgment is affirmed.

(161 Fed. 266.)

SOUTHERN RY. CO. v. HOPKINS.

(Circuit Court of Appeals, Fifth Circuit. April 29, 1908.)

No. 1,665.

1. TRIAL—TAKING QUESTION FROM JURY—SUFFICIENCY OF EVIDENCE.

Where there is any positive evidence tending to establish a material fact in issue, the court is not justified in withdrawing such issue from the jury.

[Ed. Note.—For cases in point, see Cent. Dig. vol. 46, Trial, § 338.]

2. MASTER AND SERVANT—INJURY TO SERVANT—RULES OF RAILROAD COMPANY.

Where, in an action against a railroad company to recover for the death of an employé, alleged to have resulted from a defect in the car upon which he was riding, the defendant relies upon its printed rules as imposing the duty of inspection upon the deceased under the circumstances, such rules must be strictly construed against the company when their language leaves the matter in doubt.

[Ed. Note.—For cases in point, see Cent. Dig. vol. 34, Master and Servant, § 288.]

3. SAME—DEFECTIVE CARS—CONTRIBUTORY NEGLIGENCE.

A custom of a railroad company, known to its employés, to inspect cars only in its yards, will not relieve it from liability for an injury to a conductor in its employ caused by a defect in a car which he was sent at night to bring to the yards from a manufacturing plant, unless the defect was so obvious that the failure of the conductor to observe it constituted contributory negligence.

[Ed. Note.—For cases in point, see Cent. Dig. vol. 34, Master and Servant, §§ 710–722.]

4. TRIAL—INSTRUCTIONS—CHARGING UPON QUESTIONS OF FACT.

In an action against a railroad company to recover for the death of a conductor alleged to have resulted from a defect in a car from which he undertook to dismount while it was moving, an instruction that, in the absence of any proof to the contrary it would be presumed that he attempted to dismount for some reason essential to the performance of his duty, was erroneous as invading the province of the jury; the question of contributory negligence being one of fact for their determination.

[Ed. Note.—For cases in point, see Cent. Dig. vol. 46, Trial, §§ 420–435.]

Shelby, Circuit Judge, dissenting.

Digitized by Google

In Error to the Circuit Court of the United States for the Southern District of Georgia.

Jos. B. Cumming and Bryan Cumming, for plaintiff in error.

C. Henry Cohen and Archibald Blackshear, for defendant in error.

Before PARDEE and SHELBY, Circuit Judges, and BURNS, District Judge.

BURNS, District Judge. This suit, commenced in a state court, was removed by defendant to the Circuit Court of the United States for the Southern District of Georgia. The object of the action was for damages for personal injuries to plaintiff's husband, resulting in death, whilst engaged as a conductor in the yards of the defendant at Augusta. The pleadings of plaintiff allege that the deceased came to his death in the yards of the company at night while attempting to dismount from a moving car; that defendant was guilty of negligence, in this: The car upon which deceased was sitting was defective by reason of a plank slightly elevated (about one-half inch) above the flooring and a nail which projected from the end thereof; that the pants of deceased caught upon the end of said plank and upon said nail, causing deceased to lose his balance and to be thrown in front of the car, one wheel of which passed over his body, resulting in instant death. The defendant denied each material allegation, and contended that the deceased was negligent in attempting to dismount while the car was in motion; that the same was a violation of the rules established by the company, and, further, that it was the duty of the deceased to inspect the car and discover the defects, if any; that failure so to do was negligence. The plaintiff obtained a verdict and judgment for $7,500, and the defendant assigns the following errors:

First. The refusal of the trial court to direct a verdict for the defendant. It is frequently said that the servant must establish three propositions to entitle him to recover from the master for any injury received in the master's business: (1) That the appliance is defective; (2) that the master has notice thereof, or knowledge, or ought to have had; (3) that the servant did not know of the defect, and had not equal means of knowing with the master (Wood on M. & S. § 414). In the event the danger (in this case the defect) was as obvious and apparent to the employé as the master, he is not entitled to recover. The evidence discloses that the deceased was directed to go to an industrial plant, known as the Buckeye Cotton Oil Company, connected by spur track with line of defendant, and bring in certain cars. This order was given between 4 and 5 o'clock the evening of the accident. The evidence fails to show at what time this order was executed, but it does appear that the accident occurred at about 7:35 p. m. upon the conductor's return to what is known as the "Fenwick street yard." The car upon which the conductor was seated was in front of the engine, said car being an oil car containing a tank filled with oil at said plant. The city ordinances of Augusta limit the speed of the trains to five miles per hour, and a flagman was preceding the train by walking ahead so as to signal in the event of danger to any person about to cross the track. The train consisted of engine and three cars, two in

Digitized by Google

the rear of the engine and one in front, upon the northeast corner of which the conductor was seated. Said train was moving east along Washington street, and, when about opposite Fenwick street, the conductor attempted to dismount, and, in the language of John Jones, the only witness offered upon the trial who claims to have witnessed the accident:

"At the time Capt. Hopkins was killed, I was standing between Fenwick and Washington streets. He was sitting on the right-hand side, right at the end of the train. It was going at the rate of 1½ to 2 miles an hour. I saw him take his lantern and put it on his arm. He put his hand down and got up, swung, hung, and fell over. He hung by a nail which hung on his pants. I saw what occurred from where I was standing. It was night. I was the length of this room away from him. I saw his trousers catch on the nail. After he fell, I went up there, but did not see the nail. I would consider it about 30 yards across this courtroom; that is about the distance I was away from Mr. Hopkins. I could see his pants hung. There was nothing else for him to be hung on. The nail stuck out from the right side of the car, right at its top. There was an electric arc light on the other side of him. The car had not quite reached the electric light."

Blount, chief inspector, and his assistant, Hood, were called a few minutes after the accident, and reached the scene before the car had been moved. They detail the character of inspection made, and both testify that they carefully examined the plank and end of the car upon which deceased was sitting, and from which he fell, and there was no defect and no nail. Blackston, at that time yard foreman, and still in the service of the company, stated upon direct examination that he examined the car and found the nail. Upon cross-examination he admitted that he examined the car shortly after the accident with a lantern and failed to discover any nail, but that he examined the car again the next day in the Hamburg yards, across the Savannah river, and found the nail. The car was photographed about 20 days after the accident. The witness Blackston testified that the car had undergone no change since his examination. Three photographs accompany the record, showing the car, and particularly the northeast corner thereof, and by the use of a magnifying glass the nail may be observed in one of the pictures, but it is not discoverable in the others. The testimony of the inspectors is to the effect that the nail would be regarded as a defect or obstruction. The only other evidence tending to support the nail theory is that the pants disclosed a rent in the rear, reaching nearly to the waist band, but the evidence shows that the body of the deceased was dragged by the brake beam, and this may as readily account for the rent as the protruding nail. The fact that the nail was present the day after the accident is not material, and but a slight circumstance to indicate its presence at the time of the accident. The witness Blackston is perhaps not too zealous in aiding the administration of the justice of the case, but the suggestion occurs that, in the event a witness could plainly see the nail when only the head of it was exposed to his vision a distance of "thirty yards," this witness who was making examination for the sole purpose of locating the defect ought to have made the discovery of that which was so patent to the main witness. The result is one witness, Jones, claims to have seen the nail whilst standing across the street. Blackston, the yard

Digitized by Google

foreman, examined the car with his lantern and failed to find it. Two witnesses, Blount and Hood, looking for the defect in the board upon which deceased was sitting, positively declare there was no nail. We are of the opinion that the preponderance of the testimony establishes the absence of the nail at the time of the accident, but under the holding obtaining here and elsewhere the trial court would not be justified in withdrawing the case from the jury, though it is difficult to appreciate, under the facts of this case, that the burden of proof resting upon the plaintiff to establish the defect has been fully discharged. Matters of this kind in most jurisdictions are committed to the sound discretion of the trial court in determining whether or not the verdict shall stand as the judgment of that court, and, where there is any positive evidence tending to establish a material fact, we are not at liberty to sustain an assignment based upon the refusal to direct a verdict for the defendant.

The next contention of the defendant is that the verdict should have been directed for the defendant by reason of the fact that under the rules and custom obtaining with this company, and well known to the deceased, it was his duty to make the inspection of the car at the mill of the cotton oil company, and that his failure constitutes negligence, and upon the further ground that the deceased, well knew that the custom had long obtained upon the part of the company not to inspect any cars at industrial plants, and, by reason of this custom and the failure upon his part to make the inspection, he was guilty of negligence and not entitled to recover. In answer to the suggestion as to the printed rules of the company, as offered in evidence, a copy of which had been furnished the deceased (his receipt therefor being introduced by defendant), it is difficult to say that the rule relied upon places the duty of inspection, at such places, upon the conductor. Evidence was introduced to the effect that the rule in question only charged conductors with the duty of inspection while operating trains upon the road, and courts will not give a larger intendment to the rule than the language thereof clearly permits; the rationale being to limit, and not to extend, such instruments. The construction should be strict, rather than latitudinous. Upon the proposition that the custom long obtaining and well known to the deceased, that this defendant only made inspection of cars in its yards, and not elsewhere, operated to preclude the deceased from relying upon inspection at any other place or point, it is deemed sufficient to say that, in the absence of a rule plainly governing a like situation, the deceased was not called upon to perform a duty resting upon the master to see that the car was in a reasonably safe condition. This is a legal requirement upon the part of the master which he cannot escape, and it follows as a matter of law that the train employé will not be denied a recovery for failing to detect a dangerous defect in a car, unless it be such danger or defect, as is patent and obvious. We cannot, therefore, consent to the adoption of the view that the verdict should have been directed for the defendant upon the ground that the facts of this case make an exception to the general rule. It does not conclusively appear that the defect was so patent and open to observation as to preclude plaintiff's right

Digitized by Google

to submit the question to the jury. For the reasons stated, the assignment is not sustained.

In this connection it may not be improper to observe, however, that the charge of the court submits to the jury the question of negligence upon the part of the defendant in permitting the raised board to remain upon the car. This is not assigned as error, but clearly the case should not have gone to the jury on this issue for the reason that this was a foreign car, and while the duty is the same in regard to inspection as if it were a domestic car—that is, the property of the company—the plank in question was an integral part thereof, and, if defective the law would charge a knowledge thereof to the man who sat upon it from the time the car was placed in motion until he went to his death. Besides the whole testimony as to the cause of the accident, that of the witness Jones affirmatively discloses that the plank had no connection with the injury. To charge upon an issue not supported by evidence is uniformly condemned, and under the facts of this case, if assigned, would operate as a reversal.

The next assignment complains of that part of the charge which instructs the jury that:

> "In the absence, however, of any proof to the contrary, it will be presumed that he [the conductor] attempted to dismount from the car for some reason essential to the performance of his duty."

We are of the opinion that the charge is erroneous, in that it invades the province of the jury. The only question for the jury to determine bearing upon the act of the conductor in attempting to dismount from a moving train is whether or not he was guilty of negligence which contributed to the accident. The jury may have readily understood that, if the act itself was induced by a desire and necessity to perform a service due the master, the act and effort to serve the master would not be negligent. The holding is uniform that questions of fact are for the jury, and that a charge which assumes to determine a material fact is an invasion of the province of the jury. This proposition is supported by the following authorities: Railway Co. v. Jones, 130 Ala. 456, 30 South. 586; Railway Co. v. George, 94 Ala. 199, 10 South. 145; Carroll v. Railway Co., 82 Ga. 452, 10 S. E. 163, 6 L. R. A. 214; Railway Co. v. Roach, 64 Ga. 635; Railway Co. v. Wangelin, 152 Ill. 138, 38 N. E. 760; Railway Co. v. Warner, 123 Ill. 38, 14 N. E. 206; Railway Co. v. Morgan, 132 Ind. 430, 31 N. E. 661, 32 N. E. 85; Dolphin v. Plumley, 175 Mass. 304, 56 N. E. 281; Avilla v. Nash, 117 Mass. 318; McGrath v. Railway, 76 Minn. 146, 78 N. W. 972; Bluedorn v. Railway, 121 Mo. 258, 25 S. W. 943; Marcus v. Loane, 133 N. C. 54, 45 S. E. 354; Bodie v. Railway, 66 S. C. 302, 44 S. E. 943; Railway v. Smith (Tex. Civ. App.) 82 S. W. 787; Railway v. Burns (Tex. Civ. App.) 63 S. W. 1035; Railway v. Waller (Tex. Civ. App.) 62 S. W. 554; Railway v. Baker (Tex. Civ. App.) 58 S. W. 964; Railway v. Smith (Tex. Civ. App.) 51 S. W. 506; Railway v. Zapp (Tex. Civ. App.) 49 S. W. 673; Railway v. Gaither (Tex. Civ. App.) 35 S. W. 179; McKelvey v. Railway, 35 W. Va. 500, 14 S. E. 261; Railway v. Camp, 105 Fed. 212, 44 C. C. A. 451; Railway v. McClintock, 91 Fed. 223, 33 C. C. A. 466.

Digitized by Google

Having reached a disposition of the case, it is not deemed essential that the two remaining assignments should be discussed. By reason of giving the charge complained of, the judgment of the Circuit Court should be reversed, and the cause remanded with instructions to grant a new trial; and it is so ordered.

SHELBY, Circuit Judge (dissenting). I am constrained to dissent from the opinion just read. A short excerpt from the elaborate and well-considered charge of the trial judge is selected on which to base the judgment of reversal. Construing the language decided to be erroneous with the evidence and the context of the charge, I am of opinion that it does not constitute such error as makes it proper to reverse the judgment.

The cars were moving very slowly, at the rate of 1½ or 2 miles an hour, when the deceased got off. It was proved to be the custom of the conductors to get off the trains when running even faster than the one in question. This custom was known to the officers of the railway company. It was shown that no conductor could have kept his place who waited till the train came to a standstill before he would get off. As to the circumstances under which the deceased attempted to alight when he was killed, a witness testified:

"It was a matter of his duty to get off, because his time had run out. That was his terminal, and he was to be relieved by his night relief. He was supposed to be relieved about 7:30, and this happened about 7:35. The car had almost come to a stop as to where they would back into the Fenwick street yards, still moving toward the yard. It would have to be backed in. The engine was in the middle of two cars—one in front and one behind. It would have been his duty for him to have gotten off and selected his track to back his train in. He was supposed to be relieved there by his night relief. Whether he got off for his relief or to back his train in I am unable to say. They relieve each other sometimes when the train never stops, and they proceed right on to destination as possibly a man might be going to Hamburg. He would climb up on his train and take his papers, and proceed on to Hamburg without the train ever stopping. I don't know of my own knowledge why he got down. The track he was on was running north. You have to pass beyond Fenwick street to the north, and you would then back into the yard on Washington street. It branches off into the Fenwick street yard; that is located between Fenwick and Washington streets. Where he fell from the car is right opposite to the Washington street yard. I found the relieving crew there. He had not been moved. It was about 15 minutes after the accident."

As bearing on this question, the judge charged the jury as follows:

"When a point on the track was reached opposite the freight office of the company, where, according to the testimony of one of the witnesses, it was necessary to stop the car and back into the yard, while the train was slowly moving, Hopkins attempted to get off the car. Whether he did this to surrender the train to a new crew which was waiting for him there, or whether to take his position on the other end of the train, which was now backing into the yards of the company, or whether to walk back and select a track in the yard on which his train was to be placed, is not made clear by the evidence. *In the absence, however, of any proof to the contrary, it will be presumed that he attempted to dismount from the car for some reason essential to the performance of his duty.* A witness who was standing a short distance away testified that, as Hopkins proceeded to get down from the car, he, the witness, saw his trousers catch by a nail, that he swung under the car forward of the front wheel, which passed over him, crushing him to death. This witness, a negro named John Jones, testified that there was a large electric light there, and that, although it was night, he saw the occurrence plainly."

Digitized by Google

I have designated by italics that part of the charge which the court has found to be reversible error. If it be assumed that the judge was in error in stating what the presumption would be in the absence of proof, it would be a perfectly harmless error, because the proof shows that the car had arrived at a place where it was the duty of the deceased to alight, and that it was going at a speed when, in the absence of the defect in the car complained of, the deceased could have left the car in safety.

I do not think the sentence of the charge quoted in the opinion is error justifying the reversal of the judgment.

NOTE.—The following is the charge to the jury by SPEER, District Judge in the Circuit Court:

"The controversy on trial presents for your consideration and determination two issues of fact. The first is: Was the defendant company guilty of negligence resulting in the death of W. L. Hopkins, as charged? The second is: Did W. L. Hopkins, an employé of the company, by any negligence on his part contribute to the casualty which occasioned this result? The burden of proof is on the plaintiff to show to your moral and reasonable satisfaction that the charges of negligence, or a charge of negligence, set forth in the declaration are true. The proof must preponderate in the plaintiff's favor to show this fact in order to support her claim. In case you find from the evidence that the plaintiff was negligent in view of the defense that plaintiff's husband was an employé of the company and contributed by his own negligence to cause his death, the burden of proof will be on the defendant company to show this latter contention, and the evidence relating thereto must preponderate in its favor on that issue before you would be justified in holding the contention to be true.

"It appears from the pleadings, and to a degree from the evidence, that on the 27th day of October, 1904, W. L. Hopkins was a yard conductor of the Southern Railway at Augusta, Ga. His duties as such were to conduct cars or trains of cars to and from connecting lines in the city of Augusta, and to superintend such general switching as might be incident thereto. On the date mentioned in the declaration he was ordered to proceed to the Buckeye Cotton Oil Company to do some necessary switching, and to bring back to the yard of the defendant in the city a certain tank car of the firm of Proctor & Gamble. It appears that he made up his train at the Buckeye Cotton Oil Mills. The engine was in the middle pushing a tank car and pulling a freight car. It is not in fair dispute that the conductor's place while in charge of a train going over the railroad tracks within the corporate limits of Augusta was some point on his cars where he could see both the locomotive engineer and the flagman, who was compelled to precede the train for the purpose of preventing injury to people crossing the tracks. The trains on the tracks traversing the streets of the city are required to go at a very low rate of speed, not to exceed five (stated by defendant's counsel answering question of court) miles an hour. The engineer of the locomotive moving the train in question was, as usual, on the right-hand side of the locomotive. The large oil tank on the car in front of the engine on which Hopkins was precluded him from keeping in view the flagman walking in front, and the engineer behind him, unless he also should occupy a position on the right of the tank car. He might possibly have seen both from a point on that car nearer the engine, but the testimony was positive, and not contradicted, that in view of the course that the train was pursuing, a proper position for him was on the northeast corner of the front car. He was sitting immediately above the right-hand end of the front transverse beam. When a point on the track was reached opposite the freight office of the company, where, according to the testimony of one of the witnesses it was necessary to stop the car and back into the yard, while the train was slowly moving, Hopkins attempted to get off the car. Whether he did this to surrender the train to a new crew which was waiting for him there, or whether to take his position on the other end

Digitized by Google

of the train, which was now backing into the yards of the company, or whether to walk back and select a track in the yard on which his train was to be placed, is not made clear by the evidence. In the absence, however, of any proof to the contrary, it will be presumed that he attempted to dismount from the car for some reason essential to the performance of his duty. A witness who was standing a short distance away testified that, as Hopkins proceeded to get down from the car, he, the witness, saw his trousers catch by a nail, that he swung under the car forward of the front wheel, which passed over him, crushing him to death. This witness, a negro named John Jones, testified that there was a large electric light there, and that, although it was night, he saw the occurrence plainly. The defendant put in the evidence the report of the accident, date October 27, 1904, time 7:32 p. m., but probably written shortly thereafter. It was signed by H. F. Blackston, who was the yardmaster of the Southern Railway. This witness was on the scene a short time after Hopkins was killed. This report was required by the company. In reply to the question, 'State fully how it occurred?' he answered, 'While riding on front end of tank car, it is supposed that, when he went to get off, floor of car caught his trousers, and threw him on rails.' This is reiterated and slightly elaborated in the remarks appended to that report as follows: 'While coming from Buckeye Cotton Oil Mill with one car ahead and two cars behind engine, Conductor Hopkins, who was riding on front of the head car, which was a tank car, sitting on floor of car, it is supposed that, when he attempted to get off the moving car, some of his clothing caught on car and threw him across rails. One wheel passed over his body, killing him at once.' From the same report it appears that the engineer of this train was W. T. Burckhalter, the fireman was James Way, the front brakeman Joe Addison, the brakeman Benjamin Weston. None of those witnesses were produced or sworn. In response to the question, 'Name and address of all eyewitnesses of the injury, employés and others,' the name John Jones, colored, Augusta, Ga., is given in the same report. Blackston, then yardmaster, is now the yardmaster of the defendant company at Columbia, S. C. He was produced as a witness for the plaintiff. He says that he saw the car that night, and the next day in his report, which he says he did not write—it was typewritten—but which he signed, in answer to the question, 'If defective, number and initials of car or engine,' the word 'None' is written. Blackston, however, testified that he did not see the nail in the end of the beam that night, but he did see it the next day. He also described the condition of the floor of the car where Hopkins was sitting. This was likewise made plain by the photographs which the defendant company had taken, and which the plaintiff introduced. This makes it obvious that the front of the car on which Hopkins was sitting had been noticeably worn or damaged. You will have the photographs before you, and can determine to what extent this had been done. First on the floor of the car in the direction in which it was proceeding was a new plank. This appears intact. It is noticeably higher than the worn and battered plank which is behind it. This the witnesses testify and this also appears as will be seen from the photographs. Blackston testified that the nail projected at a point beneath that on which Hopkins was sitting from a quarter to three-eighths of an inch. It was 10 or 20 penny nail he said. Two car inspectors testified, one for the plaintiff and one for the defendant, that such nails when found by the inspectors were regarded as dangerous to the train hands, and were driven in. There is no contradiction as to these statements that such projecting nails on the cars were dangerous to the safety of the men who worked on the trains. The trousers worn by the unfortunate conductor were introduced in evidence. There was a long rent in the seat, extending toward the waist band, which it is insisted for the plaintiff was occasioned by the nail, which it is alleged caught in the cloth as the conductor attempted to jump or slide off the train. There is no contradiction in evidence whatever as to the manner in which Hopkins came to his death, except that afforded by the testimony of two inspectors for the company, who examined the car that night and the next day, and testified that there was no nail there. There was also evidence to the effect that the new plank, projecting above the battered plank behind it, was dangerous to safety. It is true, however, that Blount, inspector for the company, testified that he carefully examined this

Digitized by Google

car, and that it would not have been condemned. The evidence is in conflict upon this subject. If the trousers hung either from the protruding nail, or from the irregularity or uplift in the floor caused by the new plank, and if the jury find that Hopkins' body was for a moment suspended in the air as testified, and because of such suspension he lost his balance and the control of his person, and because of his inability to extricate himself was thrown either feet foremost or head foremost across the track and under the car, then the presence of the nail or the irregularity which caught his trousers may be by them regarded as the cause of his death. If the jury find from the evidence that neither of these alleged grounds of negligence was the cause of the death of the plaintiff's husband, there is an end of the case, and the verdict must be for the defendant. If you are satisfied, however, that the evidence preponderates in favor of the plaintiff on either of these issues, your next inquiry will be: Did the particular object, which it is contended caused Hopkins to fall under the forward overhand of the platform car and in front of the first wheel, constitute such a defect in the condition of the car as will support the charge of negligence?

"Now the determination of negligence is entirely a question for the jury. It is presumed by the law to be a matter of that character which 12 practical men can, better than the court, determine in accordance with the truth and the principles of right and justice. You have heard the evidence on that subject, and the question of negligence is submitted exclusively for your consideration. I may add that all I have said with regard to the evidence is submitted, as I have the right to do under the practice of these courts in summing up, merely to assist, and not to control, you. Our practice is quite different from that of the state courts, where the evidence may not be discussed. In these courts, adopting the old common-law practice, the judges have the power to refresh the minds of the jury as to the salient features of the evidence, to arrange it, and collocate it so as to assist them, but the final duty with regard to finding the facts is exclusively for the jury. All I have done, or may do, has been done merely for the purpose of assisting you, and not for the purpose of controlling your independent judgment, which must determine the issues of fact in this case.

"There are, however, certain principles of law which you must consider as aiding you in the determination of this question of negligence. Perhaps the rule upon this subject cannot be better expressed than in the language of the Supreme Court of Massachusetts, cited with approval by the Supreme Court of the United States. It is as follows: 'The rule of law which exempted the master from responsibility to the servant for injuries received from the ordinary risks of his employment including the negligence of his fellow servants does not excuse the exercise of ordinary care in supplying and maintaining proper instrumentalities for the performance of the work required. One who enters the employment of another has a right to count on this duty, and is not required to assume the risks of the master's negligence in this respect.' In this case you will understand that the defendant company occupies the attitude of the master. 'The fact that it is a duty which must always be discharged, when the employer is a corporation, by officers and agents, does not relieve the corporation from that obligation. The agents who are charged with the duty of supplying safe machinery are not, in the true sense of the rule relied on, to be regarded as fellow servants of those who are engaged in operating it. They are charged with the master's duty to his servant. They are employed in distinct and independent departments of service, and there is no difficulty in distinguishing them even when the same person renders service by turns in each, as the convenience of the employer may require.' In a subsequent portion of the same opinion, the court said: 'The corporation is equally chargeable, whether the negligence was in originally failing to provide, or in afterwards failing to keep its machinery in safe condition.'

"In the light of this decision the tank car or flat car, as it is indifferently called during the progress of the trial, may be regarded as machinery. The obligation of the railway company to furnish and to keep it in safe condition is indisputable. It follows that if a conductor, or other employé whose duty is not to furnish but to operate machinery, should be injured by defects, for the absence of which the company can properly, in view of all the facts,

Digitized by Google

be held culpable, the latter would be liable for injuries which may result. I am speaking generally now of such freight cars, and not of this particular freight car. The application to this freight car will be subsequently made. The duty of keeping the cars passing over its lines in safe condition implies the duty on the part of the company of inspecting them. This does not require an unreasonable inspection, but it should be made with ordinary care and diligence. A railroad employé, of course, pursues a dangerous and hazardous occupation. In a sense he may be said to take his life in his own hands when he engages to work with ponderous trains and machinery and cars, moving with different degrees of rapidity, and if this—or any other accident—however lamentable the result, was brought about by the ordinary risks or dangers of that service, there ought to be, and can properly be, no recovery against the defendant company. But at the same time, if, for want of proper inspection, there was a dangerous defect left in the car, and an ordinary or proper movement was made by Hopkins in the performance of his duty without negligence on his part—which otherwise would have resulted in no injury whatever—and these became the proximate cause of his death, the jury may, if they think proper, regard the presence of such defect as negligence. But, as I say, the question of negligence is entirely for them.

"Nor does it matter if the defect is in the cars of another railroad company, or other person, firm, or corporation, operated on the lines of the company where the injury was sustained. It does not matter to an employé whether he is hurt by a defect in the car of the company employing him or the car of another company. The injury to him, or his family, is the same. It follows that a railway company is responsible for such defects as would be disclosed by ordinary inspection; that is, by ordinary care and diligence. When cars come to it which have defects, visible or discoverable by such inspection. it must either remedy such defects or refuse to take such cars. This much is due to its employés. Whether there was such a defect in the car which killed the plaintiff's husband, and, if there was, whether it could have been disclosed and discovered by ordinary care and diligence in inspection, and whether because of this defect he was actually killed, are questions for the jury.

"At the request of defendant's counsel, I charge you that 'in a case of this character the plaintiff cannot recover, unless her husband could have recovered in the event he had merely received personal injuries instead of having met with his death.' Also at the same request: 'If the deceased immediately or remotely, directly or indirectly, caused the injury or any part of it, or contributed to it at all, his wife could not recover.' 'His wife' by which the counsel means the widow, could not recover. I also give you the additional instruction asked by the defendant's counsel: 'Before an employé can recover from a railroad company, he must be free from fault, and, if he is killed while in disobedience of a rule of the company, his widow cannot recover, unless it appear that such disobedience did not directly or indirectly contribute to any degree to the injury.' To this general principle I feel obliged, however, to add that if it shall satisfactorily appear to the jury by a preponderance of the evidence that the very exigencies of the business of the company, and the requirements of the defendant company's officers, obliged defendant's employés to disregard the written or printed rule, and if this was universally known to be true, and if such violation was constantly made, and the evidence discloses no attempt on the part of the company to stop it, other than the rule, the printed or written rule prohibiting such action cannot be regarded as relieving the company from the results of alert and active conduct on the part of its employés, which was necessary and proper, and of which it continually enjoyed the benefit.

"The next request to charge by the defendant's counsel is cognate, and is also given. 'When an employé of a railroad company has his choice of two ways in which to perform a duty, the one safe and the other dangerous, though convenient, he is bound to select the safe method, and, if he does not and is killed, cannot recover.' This rule, while correct as a general principle, in view of the issues here involved requires brief elaboration. If it is clear from the evidence that the business of the defendant company required that the more dangerous way should be adopted, that the movement of passengers

Digitized by Google

and freight in modern intercommunication and commerce required constant activity and alertness on the part of its own employés and swift movement and swift dismounting from cars when they were not proceeding at an unreasonable rate of speed, and beyond a rate of speed permitted by the law, and if the rule of the company either expressly or impliedly required such alertness and activity of its employés, even though a method may be more dangerous than slower and more cautious methods, it is true that a company cannot be exonerated from the consequences of such alertness and activity as it actually demands from its employés, although it may be apparently obnoxious to its written or printed rules, published some time before.

"At the request of the defendant's counsel, I charge you that 'a corporation acts only through its agents. A corporation's inspection of cars is necessarily done through its agents. It may, if it sees proper, delegate that duty to inspect to one set of employés under certain circumstances, and to another employé or set of employés under other circumstances. If the employé to whom the duty of inspection is delegated under certain circumstances fails in that duty, it is his own negligence and there can be no recovery by his widow if he is killed as a result of his own failure in the matter of inspection.' This is a correct statement of the general rule. It should always have a reasonable construction in view of the facts. It will be for the jury to determine if the failure of Hopkins to discover the defects in the cars, if there were any such defects, contributed in any degree to cause his death. The jury will look to the evidence to ascertain if this is true. As I recall the evidence, which you must remember, after nightfall Hopkins was sent to an industrial line over which the Southern Railway had control to bring therefrom the car of a private corporation. His primary duty was that of a conductor. If there were no inspectors at Augusta, it would be his duty under the rules of the company to inspect the cars which he moved. If, moreover, it appears that this car was moved here from the line of the Southern, was placed by the same company on the industrial line, was it negligence on the part of the conductor, who was sent for it in the night, to fail to discover the defects, if any, which existed, and did this failure directly or indirectly contribute in any manner to his death? In so far as the questions of fact are involved, these are matters for the determination of the jury. It appears from the evidence that the Southern has a large corps of inspectors at this place. The head inspector for the defendant company testified that he had 28 men under his orders, and that he could discharge any one of them if he failed to perform his duty.

"If, gentlemen, you find that the company was not negligent as charged in the declaration, you must find for the defendant. If you find that the deceased, the husband of the plaintiff, by negligence contributed in any manner, directly or indirectly to his own death, you must also find for the defendant. In either event your verdict will be, 'We the jury, find for the defendant.'

"If, however, you find that the defendant was negligent as charged, and that such negligence caused the death of the plaintiff's husband, and that he did not by negligence in any manner contribute thereto, your verdict must be for the plaintiff, and in that event you will proceed to ascertain the amount you should find for damages.

"In volume 70, I believe, of the reports of the Supreme Court of Georgia, certain tables are to be found which are in evidence before you, and which that court has held to be admissible in evidence for the purposes for which they were designed. It is also admissible here for the same purpose. They are not, however, binding upon you, and you may use them or not as you see fit. They are admitted in evidence solely to aid you in reaching certain reasonable and proper conclusions, because they show the result of certain observations and calculations which may be of assistance to you in your consideration of this case.

"On page 845 appears what is called the Carlisle Mortality Table, and from it can be obtained the probable expectancy of life under ordinary conditions remaining to persons of various ages. If it is proven before you that the husband of the plaintiff in this case was 39 years of age at the time of his death, by consulting this table we may ascertain that the average person

Digitized by Google

of that age may reasonably expect to live about 28¼ years longer, barring any unusual contingencies. If, then, you discover from the evidence the average yearly earning capacity of the deceased, the use of this table by indicating the probable expectancy of life may assist you in reaching a conclusion as to the aggregate value of the earnings of the deceased during the remainder of his lifetime had he lived out his expectancy, of course, taking into consideration any probable increase or diminution in his earning capacity during the remainder of such expectancy. You will, however, conclude for yourselves from all the facts proven in the case, the condition of health, the nature of occupation, and the general surroundings of the deceased what his reasonable expectancy would have been. When you arrive in your own minds at the probable aggregate earnings of the deceased for the remainder of his life, had he lived out his expectancy, your next duty will be to reduce this amount to its present cash value, or such sum as paid at one time, would be equivalent, in your judgment, to such aggregate earnings spread over quite a long period of years. For this the court can, of course, give you no definite rule, and you will have to determine such sum for yourselves. I repeat that this table is not binding upon you. You may use it if you think proper. You may reach your conclusion as to damages, if you decide the defendant is liable, according to the method I have given you, or according to the method you may adopt.

"On page 947 of the volume referred to you will find another table, by which the value of annuities on the lives of persons may be calculated. This table of annuities is designed to show the actual present cash value of annuities, or aggregate yearly cash earnings, figured at $1 per year, for persons of various ages. If it has been proven before you that the deceased, was 39 years old at the time of his death, by referring to the table you might reasonably conclude that at $1 per year for each year during the reasonable expectancy of life of a person 39 years old that the present actual cash value of such an annuity or yearly income, figured at 7 per cent. the legal rate in this state, would be $10.939. You would then fix the probable reasonable yearly income of the deceased had he lived from all the facts and circumstances in the case, and, if you should determine that amount to be $900 a year, which is at the rate of $75 a month, you would then multiply such sum by 10.939, the value of the annuity at $1 per year, and thus obtain $9,845.10 as the actual present cash value of his life.

"This annuity table may assist you in reaching a conclusion as to amount in a somewhat more mathematical and shorter way, and you may prefer to use it rather than the table first explained, but the two tables are not to be confused, for they are not to be used together, as the methods of obtaining results by them are different. I again repeat that the method of ascertaining damages by the jury, after considering all the proof, is one that the jury may determine for itself, in case they find the defendant liable. In case you find for the plaintiff, your verdict should read, 'We, the jury find, for the plaintiff the sum of so much—stating it—with costs of suit,' and your foreman will sign it.

"If you find for the defendant, your verdict will be, 'We the jury find for the defendant, with costs of suit.'"

(161 Fed. 277.)

BRAY v. MONONGAHELA RIVER CONSOL. COAL & COKE CO.

(Circuit Court of Appeals, Third Circuit. May 1, 1908.)

No. 38.

COLLISION—TOWS GOING ADRIFT IN FOG—LIABILITY OF TUG.

The owner of a tug which parted from its tow of coal boats on the Ohio river at night in a fog *held* not chargeable with negligence which rendered it liable for injuries done by the boats by drifting against other craft moored in the river merely because the tug was sent out with the tow from Pittsburg, 12 miles distant, at night, at a time when there was no fog.

Digitized by Google

In Error to the Circuit Court of the United States for the Western District of Pennsylvania.

Thomas Patterson, for plaintiff in error.
Charles G. McIlvain, for defendant in error.

Before WILLIAM HENRY MOODY, Associate Justice of the Supreme Court, and DALLAS and GRAY, Circuit Judges.

DALLAS, Circuit Judge. In the year 1905 the Evansville Contract Company was engaged in building part of a dam across the Ohio river about 12 miles below Pittsburg, Pa. When the work was suspended on the afternoon of Saturday, June 24, 1905, the floating plant, including derrick boats, pile driver boats, decked barges, flat boats, etc., was tied up in its usual harboring place. The Iron Age, a towboat owned by the Monongahela River Consolidated Coal & Coke Company (defendant below and here), left Pittsburg, with a tow of coal, at about 30 minutes after 10 o'clock in the evening of the 24th of June, 1905. She proceeded safely to a point adjacent to the site of the dam above referred to, where her tow was wrecked, and the barges composing it collided with the Evansville Contract Company's plant, "crushing, breaking, and injuring the same," and to recover for the loss and damage thus occasioned that company's trustee in bankruptcy instituted the action to which this writ of error relates. When, on the trial, the evidence for the plaintiff had been closed, the court entered a judgment of compulsory nonsuit, which it afterwards refused to take off; and the question now for decision is whether that judgment was, as is averred, erroneously awarded and sustained.

The "Statement of Claim," which in Pennsylvania is substituted for a common-law declaration, averred and alleged, inter alia, that the defendant was under the duty of taking care "to properly and carefully control and govern its said crafts, so as to avoid collision with, or injury to, other craft lawfully using said river, or the harbors and mooring places therein, yet the said defendant company, not regarding its duty in the premises, did so carelessly and negligently conduct its operations as aforesaid that during the night of June 24 to the morning of June 25, A. D. 1905, the said defendant sent out from the Pittsburg Harbor the steamer Iron Age, with a loaded fleet of coal boats, coal barges, model barges, etc.," and the only lack of due care asserted and relied upon in this court is that which was thus charged, namely, that "it was negligence to send out the Iron Age on the night of June 24, 1905." This position, however, is untenable, because there was no evidence upon which a verdict in its support could reasonably have been sustained. The contention that the burden of proof was shifted to the defendant is irrelevant, for the plaintiff himself adduced testimony that the fog which immediately caused the parting of the tug and its tow had "shut down and enveloped" them for "less than three minutes" before the accident happened. They had proceeded safely and without incident to that time; and it could not, we think, be justly held that, with respect to a plant lying 12 miles below, it was an act of negligence for the Iron Age to proceed at all merely because some rivermen would have thought she was "liable to have some fog" at some indeterminate time and place after starting.

Digitized by Google

No useful purpose would be served by discussing the evidence with more particularity. It must suffice to say that careful reading of the whole of it compels the conclusion that it would not have warranted a finding of negligence on the part of the defendant.

Therefore the judgment of the Circuit Court was right, and is affirmed.

(161 Fed. 279.)

CANADIAN IMP. CO. v. COOPER et al.

(Circuit Court of Appeals, Second Circuit. April 14, 1908.)

No. 203.

1. BROKERS—RIGHT TO COMMISSIONS—SALE MADE BY AGENT.
   A broker employed to sell property at a fixed price is not deprived of his right to commissions because the purchaser was procured through the agency of another employed by him.

2. SAME—REVOCATION OF AUTHORITY—BAD FAITH OF PRINCIPAL.
   Where brokers employed to sell bonds procured a purchaser who was ready and willing to take the bonds and disclosed his name to their principal, the latter cannot deprive them of their right to commissions by revoking their authority and itself making the sale to such purchaser.
   [Ed. Note.—For cases in point, see Cent. Dig. vol. 8, Brokers, § 69.]

In Error to the Circuit Court of the United States for the Southern District of New York.

On writ of error to review a judgment entered May 6, 1907, upon the verdict of a jury in favor of the plaintiffs for $20,000.

Decker, Allen & Storm (Charles A. Decker, of counsel), for plaintiff in error.

Samuel Untermyer (Abraham Benedict, on the brief), for defendants in error.

Before LACOMBE, COXE, and NOYES, Circuit Judges.

COXE, Circuit Judge. This action was brought by the plaintiffs below to recover $20,000 for services as brokers in effecting a sale at par of two million dollars of bonds issued by the defendant, for the agreed commission of one per cent.

Error is assigned as follows:

First.—The court erred in refusing to grant the motion of counsel for the plaintiff in error at the close of the case, to dismiss the complaint on the ground that no connection of the plaintiffs, or the plaintiffs as a firm, was shown with the transactions proved.

Second.—The court erred in charging the jury:

"But a man, unless the agreement is specific to the contrary, may just as well employ some one else to do his work for him as do it all himself; he may just as well earn his commission by the labor of another whom he employs for that purpose as by his own direct personal acts."

Third.—The court erred in charging the jury:

"But if the option had expired because it had been taken away after the name of Blair & Co. had been divulged, that kind of an expiration of the option would not, in my judgment, deprive the plaintiffs of a recovery."

Digitized by Google

There was no error in refusing to dismiss the complaint on the ground that no connection of the plaintiffs with the transaction was shown. It is possible that there was sufficient uncertainty upon the subject to warrant the submission of the question to the jury but the court was clearly right in refusing to decide it as matter of law.

There was no error in the charge as quoted in the second assignment supra.

The language was used by the court in explanation of what immediately preceded it. The jury had just been told that if they found that the plaintiffs were the procuring cause of the sale of the bonds to Blair & Co. that such conclusion would be reached by finding that the work which procured the sale was "the labor of Anderson, one of the plaintiffs, in going to Luria, and Luria in going to Tobey and Tobey in communicating with Marston," of Blair & Co.

The broad language quoted must, therefore, be limited to the facts to which it evidently referred, and we know of no authority for holding that a broker, employed to procure a purchaser for property at a fixed price is, if he produces such purchaser, deprived of his commissions because he has employed assistants.

The quotation from the charge found in the third assignment of error, when taken in connection with the rest of the charge on the same subject, is, we think, entirely correct. The jury were instructed in substance, if they found that the plaintiffs had procured a purchaser ready and able to take the bonds and had disclosed his name to the defendant, that the latter could not, by revoking the plaintiffs' authority and selling the bonds itself to the purchaser, deprive the plaintiffs of their commissions.

In Sibbald v. Bethlehem Iron Co., 83 N. Y. 378, the Court of Appeals, at page 384 (38 Am. Rep. 441), says:

> "The right of the principal to terminate his authority is absolute and unrestricted, except only that he may not do it in bad faith, and as a mere device to escape the payment of the broker's commissions. Thus, if in the midst of negotiations instituted by the broker, and which were plainly and evidently approaching success, the seller should revoke the authority of the broker, with the view of concluding the bargain without his aid, and avoiding the payment of commissions about to be earned, it might well be said that the due performance of the obligation by the broker was purposely prevented by the principal."

We think no reversible error has been assigned and that the judgment should be affirmed with costs.

(161 Fed. 280.)

POLLOCK et al. v. RIDDICK.

(Circuit Court of Appeals, Sixth Circuit. May 5, 1908.)

No. 1,777.

SALES—OPTION TO BUY—ACCEPTANCE.

Under a contract giving an option to purchase timber, to expire on a certain date, and providing that, "if accepted, the above-named parties are to pay for said timber an additional amount of $2,450, in cash upon the making of a contract for the sale of said timber," the purchasers were

Digitized by Google

required to pay or tender the money before the option expired to entitle them to maintain an action to recover damages for the refusal of the seller to make the sale.

In Error to the Circuit Court of the United States for the Western District of Tennessee.

H. R. Boyd, for plaintiffs in error.

A. W. Biggs, for defendant in error.

Before LURTON, SEVERENS, and RICHARDS, Circuit Judges.

RICHARDS, Circuit Judge. This was a suit brought by E. N. Pollock and H. R. Pollock to recover damages for the failure of T. K. Riddick to comply with a contract on an accepted option for the sale of timber. The court below sustained a demurrer and dismissed the case.

The material part of the option executed and delivered by Riddick on November 1, 1904, was as follows:

"Received of E. N. Pollock and H. R. Pollock, Memphis, Tennessee, the sum of fifty dollars, in consideration of which amount I have given, granted and sold to them the option and privilege of purchasing all the timber of every description now standing on that portion of my place in Crittenden county, Ark.," etc.

"This option is given for thirty days and expires on the first day of December, 1904."

"If accepted, the above-named parties are to pay for said timber an additional amount of $2,450 in cash, upon the making of a contract for the sale of said timber."

"It is understood and agreed that if this option is accepted, and said timber purchased, the purchasers are to be allowed three years, or until the first day of January, 1908, to remove the said timber," etc.

It will be observed that this option was not one to enter into a contract for the purchase of the timber, but to purchase the timber. Its terms are clearly defined. It was given for 30 days, and expired on the 1st day of December, 1904. The Pollocks were given the option and privilege of purchasing the timber, but only within the life of the option. And they were given the option to purchase the timber by paying the additional amount of $2,450 in cash.

But it is contended that the term defining payment is qualified by the succeeding condition; that it was to be "in cash" only "on the making of a contract for the sale of said timber"; that this last, "the making of a contract for the sale of said timber," was a condition precedent; that the cash did not have to be paid or tendered until the contract was made; and that in the present case the contract was not made, nor was there any offer to make it. The substituted declaration avers that Riddick was absent from Memphis from and after about the 20th day of November, 1904, until the 5th day of December, 1904, at Somerville, in Fayette county, Tenn., and that prior to the 1st day of December, 1904, one of the Pollocks went to Somerville, saw Riddick, and told him that they (the Pollocks) accepted the option and contract to purchase, and that they would take the timber under the terms and conditions of the option, and that Riddick returned to Memphis on or about the 5th day of December, 1904, and on that day the Pollocks "were ready, willing, and able to pay the defendant the sum of $2,450," the

Digitized by Google

balance of the consideration named in the option and contract, and demanded under the option; that Riddick execute a contract for the timber upon said property to them, and that he comply with the conditions of said option which Riddick declined to do, on the ground that the balance of the consideration of $2,450 was not paid or tendered on or before the 1st day of December, 1904; and that the demand for a compliance with the said contract on December 5, 1904, came too late. In brief, as shown by the substituted declaration, the Pollocks were given until the end of the 1st day of December to purchase the timber by paying the additional amount of $2,450 in cash, and at the time of paying or tendering this money they had a right to demand a conveyance of the timber. But they let the time pass without taking advantage of the option. By the terms of the option it expired on the 1st day of December, and they waited until the 5th of December, and then demanded that Riddick execute a contract conveying them the timber. They made this demand upon the strength of the fact that on or about the 1st of December they had notified Riddick that they accepted the option, but, though they accepted it, they did not comply with its terms during its existence.

We think this case is fully covered by the decisions in Kelsey v. Crowther, 162 U. S. 404, 408, 16 Sup. Ct. 808, 40 L. Ed. 1017, and Kentucky Distilleries & Warehouse Co. v. Warwick Co., 109 Fed. 280, 283, 48 C. C. A. 363. In each of these cases an option to sell land, etc., was involved, and a proceeding to enforce the option. In each an abstract of the land covered by the option was to be furnished, and the failure on the part of the giver of the option to furnish the abstract was made the excuse for not paying or tendering the price of the land within the time fixed by the option. But the court held that the duty to tender the price of the land under the option and according to its terms existed regardless of the failure on the part of the giver of the option to furnish the abstract if the would-be purchaser desired to lay the ground for the suit for specific performance. Said the court, speaking by Mr. Justice Shiras (page 408 of 162 U. S., page 810 of 16 Sup. Ct. [40 L. Ed. 1017]):

> "If the contract is construed as making it the duty of Crowther to tender the abstract, yet his failure to do so did not dispense with performance or the offer to perform on the part of the complainants. His failure to furnish the abstract might have justified the complainants in declaring themselves off from the contract and might have formed a successful defense to an action for damages brought by Crowther. But, if they wished to specifically enforce the contract, it was necessary for the complainants themselves to tender performance. To entitle themselves to a decree for a specific performance of a contract to sell land, it has always been held necessary that the purchasers should tender the purchase money."

This is in accordance with the rule laid down in Bank of Columbia v. Hagner, 1 Pet. 460, 464, 7 L. Ed. 219:

> "The seller ought not to be compelled to part with his property without receiving the consideration; nor the purchaser to part with his money, without an equivalent in return. Hence in such cases, if either a vendor or vendee wish to compel the other to fulfill his contract, he must make his part of the agreement precedent, and cannot proceed against the other, without an actual performance of the agreement, on his part, or a tender and refusal."

Digitized by Google

The same question came before this court in the case of Kentucky Distilleries & Warehouse Company v. Warwick Co., 109 Fed. 280, 48 C. C. A. 363, and the decision of the Supreme Court in Kelsey v. Crowther was expressly followed, Judge, now Mr. Justice, Day, saying (page 283 of 109 Fed., page 366 of 48 C. C. A.):

"As we understand Kelsey v. Crowther, the ruling of the Supreme Court of the United States is that notwithstanding failure to furnish an abstract when the purchase money was to be paid by a day certain, and time was of the essence of the contract, the purchaser seeking specific performance would be obliged himself to tender performance on his part."

In the present case, the option was to purchase, and it had to be used within 30 days. It was to expire on the 1st of December. Before the termination of that day, the $2,450 must be paid in cash. If the Pollocks desired the timber, they should have paid the cash. If they desired also a written contract, they should have paid or tendered the cash on that day and demanded the contract. It does not appear they did either thing. They simply stood by and failed to take advantage of the option while it was still alive.

Judgment affirmed.

(161 Fed. 283.)

LEVY et al. v. EQUITABLE LIFE ASSUR. SOCIETY.

(Circuit Court of Appeals, Sixth Circuit. May 5, 1908.)

No. 1,749.

LANDLORD AND TENANT—CONSTRUCTION OF LEASE—PROVISION FOR TERMINATION IN CASE OF INJURY BY FIRE.

A lease for a room in a six-story building provided that, if the "building or premises wherein said demised premises are contained" should be destroyed by fire or so badly injured that they could not be repaired within sixty days, the lease should terminate; but if said premises, "having been injured as aforesaid," should be repairable within 60 days, the lessor should repair with all reasonable speed, and the rent should cease during the time of making the repairs, and that, if so slightly injured as not to be rendered unfit for occupancy, they should be repaired and the rent should not cease. *Held*, that such provisions applied to the entire building, and that, on an injury to the building by fire which could not be repaired within 60 days, the lessor was entitled to terminate the lease, although the demised portion was only slightly injured, and not rendered unfit for occupancy.

In Error to the Circuit Court of the United States for the Western District of Tennessee.

L. Lehman, for plaintiff in error.

D. Goldsmith and H. Craft, for defendant in error.

Before LURTON, SEVERENS, and RICHARDS, Circuit Judges.

RICHARDS, Circuit Judge. This is a suit which grew out of the partial destruction by fire of what was known as the Equitable Building, in Memphis. Beginning August 1, 1903, the plaintiffs leased a storeroom in one corner of the building, on the ground floor, for use as a saloon and café; first, for three years, and after that for five years more. On February 21, 1906, the building was partially destroyed by

Digitized by Google

fire. It was a large office building, estimated to be worth $79,000, and the adjusters appraised the damage at $43,000. The building had six stories, and the principal damage was to the upper stories. The storeroom occupied by the plaintiffs was but slightly damaged; the principal injury being from water. The plaintiffs did not vacate the storeroom occupied by them in consequence of the fire, but continued to do business, and on March 12, 1906, the agent of the defendant served notice upon them that he considered the lease canceled by reason of the damage to the building, and expected them at once to surrender possession of the premises. The plaintiffs refused to do this, and have been in possession ever since. Instead of surrendering, they brought the present suit to recover $25,000 damages for breach of the two leases under which they claim to hold possession of the saloon. A part of the damages alleged rests in contract and a part in tort. Thus the lessor was to furnish water, heat, and light, but after the fire the water, gas, and electricity were shut off, it is claimed, in violation of the contract. After the fire, a fence or barricade was constructed around the saloon, to some extent hindering entrance. A shed was built over the sidewalk, and a chute, or two chutes, for brick and débris, were constructed from the second story to the street in front of the entrance to the saloon. All these acts were charged by the plaintiffs to have been wanton and unnecessarily harmful to their business. The case was tried before a jury, and there was a verdict for the defendant. The attempt is to reverse this.

The allegations of the declaration concerning the contents and provisions of the two lease contracts made and entered into between the Equitable Society and the plaintiffs were admitted by the latter in its plea to be correct. The charge of the court was based upon the statement of the declaration referred to, which is as follows:

"Both of said leases provide that if during the term thereof the building or premises wherein said demised premises are contained shall be destroyed by fire, or the elements, or be so badly injured that they cannot be repaired within 60 days from the happening of such injury, then said lessees shall immediately surrender said premises and all interest therein to the defendant. And both of said leases further provide that in case of destruction or partial destruction of said building, as aforesaid, the defendant, as lessor, may reenter and repossess said premises; but if said premises, having been injured, as aforesaid, shall be repairable within 60 days from the happening of such injury, then the rent shall not run or accrue after such injury, or while the process of repairing in going on, and defendant, as lessor, shall repair the premises with all reasonable speed, and the rent shall re-commence immediately after such repairs shall be completed; and if said premises shall be so slightly injured by fire, or the elements, as not to be rendered unfit for occupancy, then said lessor agrees that the same shall be repaired with reasonable promptitude, and in that case the rent accrued or accruing shall not cease or terminate."

It was the contention of the plaintiffs that these leases provided that, if the demised premises should be so badly injured that they could not be repaired within 60 days after the fire, the lessees should immediately surrender the same. But, if the demised premises should be repairable within 60 days, then the rent should not accrue after the injury, or while the work of repairing was going on. The lessor should repair the premises with all reasonable speed, and rent should re-com-

Digitized by Google

mence immediately after such repairs should be completed; and, if the demised premises should be so slightly injured as not to render the same unfit for occupancy, then the same should be repaired with all reasonable promptitude, and in that case the rent accrued or accruing should not cease or terminate. In other words, the plaintiffs contended that the provisions of the lease or leases respecting the demised premises related to them alone, and not to the building as an entirety. The character of the injury done by the fire was to be determined with reference to the demised premises alone, without regard to the building in which they were contained. If the demised premises should be repairable in 60 days from the fire, or if the demised premises should be so slightly injured as not to be rendered unfit for occupancy, in either case the lessor should repair the premises with all reasonable speed. In the first case the rent should not accrue while the premises were undergoing repairs; and, in the second case, the rent should not cease or terminate.

The whole case turns upon the construction of these provisions of the leases as set forth in the declaration. The court recognized this and instructed the jury that if they believed from the testimony that the building could not have been repaired within 60 days, but that it would require more than 60 days to have repaired it and placed it substantially in the condition it was in before the fire, then their verdict should be in favor of the defendant. Asked at the close of the charge what he meant by the expression "building," the court said: "I mean the Equitable Building." And then questioned by counsel, "As a whole?" the court replied: "As a whole; from cellar to garret."

To make explicit its position with regard to the construction of the provisions of the written leases, as set out in the declaration, the court declined to charge the jury: (1) That the provisions for the termination of the leases on account of damage by fire means damage or injury repairable within 60 days to the part of the Equitable Building embraced in said leases without reference to the time required for repairing other parts of the building "(2) If you find that by the fire which occurred in said building on February 21, 1906, the part thereof demised by said lease was not injured, or was injured and the damage was repairable within 60 days from the time of the fire, then such damage did not operate to give the defendant the right to end both or either of said leases." (3) And the foregoing second instruction is applicable, even though it might have required more than 60 days from the time of the fire to have repaired other parts of the building than those covered by the lease, unless it was necessary in the repairing of such other parts to include the said leased premises in the work of repair that would take more than 60 days from the time of the fire to accomplish.

We think the court was quite right in taking the view it did of the provisions of the leases as set out in the declaration. It seems clear to us that the opening provision related to the destruction or damage by fire of the entire building described as "the building or premises wherein said demised premises are contained." It is provided that if these shall be destroyed by fire, or the elements, or be so badly injured that they cannot be repaired within sixty days from the happening of

Digitized by Google

ises, and that it was not in fact so engaged; that at a hearing before the Assistant Attorney General for the Post-Office Department, before the fraud order was issued, these secret reports were withheld, and inspection of them was denied to the complainant, there was no other evidence that the complainant was guilty of participation in such a scheme, and all the evidence at that hearing was, and the conceded and admitted facts at that hearing were, that the complainant was not engaged in any such scheme or device, but that nevertheless the Postmaster General issued the order whereby, unless its execution were stayed by the court, some of the complainant's property, consisting of remittances by checks, drafts, and post-office money orders through the mails would be confiscated, some of it would be returned to senders, and its business and reputation would be destroyed, to its irreparable injury, in violation of the fourth, sixth, and fourteenth amendments to the Constitution. The defendants answered that the order of the Postmaster General was issued upon all the evidence taken both before and at the hearing before the Assistant Attorney General, both that in support and that in refutation of the charge that the bank was engaged in conducting a scheme or device for obtaining money through the mails by means of false and fraudulent pretenses, representations, and promises; that all this evidence taken together was satisfactory to the Postmaster General that the bank was so engaged; that it was in fact thus engaged; that the defendants were simply obeying the order of the Postmaster General, and they denied every allegation of the bill which was not thus expressly admitted. A general replication was filed, the case was set down for hearing on July 3, 1907, and on that day the court dismissed the bill.

Sections 3929 and 4041 of the Revised Statutes as amended by Act Sept. 19, 1890, c. 908, §§ 2, 3, 26 Stat. 466, and by Act March 2, 1895, c. 191, § 4, 28 Stat. 964 (U. S. Comp. St. 1901, pp. 2686, 2688, 2749), provide that "the Postmaster General may upon evidence satisfactory to him that any person or company is engaged in conducting any lottery, gift enterprise or scheme for the distribution of money, or of any real or personal property by lot, chance, or drawing of any kind, or that any person or company is conducting any other scheme or device for obtaining money or property of any kind through the mails by means of false or fraudulent pretenses or promises, instruct postmasters" at any postoffice at which letters to such a person or company arrive to mark them fraudulent and to return them to the senders. The Supreme Court has had occasion to consider these acts of Congress in two cases, in the American School of Magnetic Healing v. McAnnulty, 187 U. S. 94, 107, 108, 109, 110, 23 Sup. Ct. 33, 47 L. Ed. 90, and in Public Clearing House v. Coyne, 194 U. S. 497, 506, 509, 24 Sup. Ct. 789, 48 L. Ed. 1092. In the former case the Postmaster General had found, upon evidence satisfactory to him, that a scheme or device for obtaining money through the mails by means of pretenses, promises, and representations that physical ills could be benefited and cured by the proper exercise of the mind was a scheme denounced by these acts of Congress, and had issued an order commonly called a "fraud order" against the company which practiced it, whereby he directed the local postmaster to mark the letters

Digitized by Google

sent to the complainant which contained checks and drafts for money "Fraudulent," and to return them to the senders. The Supreme Court held (1) that, where the beneficial effect of the scheme or device in question as in that case is a matter of opinion not susceptible of proof as an ordinary fact, the Postmaster General has no lawful jurisdiction or authority to issue a fraud order (pages 106, 107 of 187 U. S., page 38 of 23 Sup. Ct. [47 L. Ed. 90]); (2) that, where the Postmaster General is induced to issue a fraud order by an error of law, his action is reviewable, and the execution of his order may be enjoined by the courts, citing Burfenning v. Chicago, etc., Railway Co., 163 U. S. 321, 16 Sup. Ct. 1018, 41 L. Ed. 175, Johnson v. Drew, 171 U. S. 93, 99, 18 Sup. Ct. 800, 43 L. Ed. 88, and Gardner v. Bonestell, 180 U. S. 362, 21 Sup. Ct. 399, 45 L. Ed. 574, which apply the same rule to the Land Department (page 108 of 187 U. S., pages 38, 39, of 23 Sup. Ct. [47 L. Ed. 90]); (3) that if there is no evidence before the Postmaster General of the violation of the federal law, or if the admitted, conceded, or established facts before him show no such violation, the Postmaster General's determination that the evidence of such violation is satisfactory to him and his issue of a fraud order thereon is a pure mistake of law remediable by the courts (pages 109, 110 of 187 U. S., page 39 of 23 Sup. Ct. [47 L. Ed. 90]); and (4) that, where the Postmaster General issues a fraud order without jurisdiction or by reason of an error of law, and thereby stops the delivery of letters which contain valuable inclosures, he violates the property rights of the person or company whose letters are thus withheld (page 110 of 187 U. S., page 39 of 23 Sup. Ct. [47 L. Ed. 90]).

In Public Clearing House v. Coyne, 194 U. S. 497, 510, 515, 24 Sup. Ct. 789, 48 L. Ed. 1092, the Postmaster General had held that a scheme or device for obtaining money through the mails by means of pretenses, promises, and representations that persons who remitted $3 enrollment fee and $1 per month for 60 months would receive moneys in return proportionate to the increase of the membership of the association they joined, subject to numerous conditions, whereby the scheme "must ultimately and inevitably result in failure" and in loss to the great majority of the members (page 515 of 194 U. S., page 796 of 24 Sup. Ct. [48 L. Ed. 1092]), was not a lottery, but a scheme or device denounced by the acts of Congress. The court below had reviewed the finding of fact of the Postmaster General and had found that it was not such a scheme, but that it was a lottery. The Supreme Court upheld the constitutionality of these acts of Congress, "the only reservation being that the person injured may apply to the courts for redress in case the Postmaster General has exceeded his authority or his action is palpably wrong," (page 509 of 194 U. S., page 794 of 24 Sup. Ct. [48 L. Ed. 1092]); and it said:

"Inasmuch as the action of the postmaster in seizing letters and returning them to the writers is subject to revision by the judicial department of the government in cases where the postmaster has exceeded his authority under the statute (School of Magnetic Healing v. McAnnulty, 187 U. S. 94, 23 Sup. Ct. 33, 47 L. Ed. 90), we think it within the power of Congress to intrust him with the power of seizing and detaining letters upon evidence satisfactory to himself, and that his action will not be reviewed by the court in doubtful cases." Pages 509, 510 of 194 U. S., page 794 of 24 Sup. Ct. (48 L. Ed. 1092).

Digitized by Google

It also held that there was no error in the finding by the court below that the Postmaster General was mistaken in his finding of the fact that the plan was a scheme to obtain money by false representations and promises and in the finding of the court that it was in fact a lottery and not such a scheme. It sustained the fraud order because the plan constituted a lottery. Pages 512, 515 of 194 U. S., pages 795, 796, of 24 Sup. Ct. (48 L. Ed. 1092). A significant fact in this case is that the Supreme Court affirmed the review by the lower court of the Postmaster General's finding of fact, approved its reversal of that finding, and declared that such a review would not be made in doubtful cases, but only when his finding was "palpably wrong." Pages 509, 510 of 194 U. S., pages 793, 794 of 24 Sup. Ct. (48 L. Ed. 1092). These decisions are in exact accord with the settled principles of law which govern the decisions and acts of the Land Department and of the other executive departments of the government upon which quasi judicial powers are conferred by acts of Congress and from them, and the decisions cited therein and below, these conclusions may be safely drawn.

In a doubtful case within his jurisdiction in the absence of fraud or a gross mistake of fact, where there is some evidence which is satisfactory to the Postmaster General to sustain a fraud order, his decision of the question of fact upon which the order is founded is conclusive, and it will not be reviewed by the courts.

But his authority, like that of every other executive officer upon whom quasi judicial power is conferred by acts of Congress, is neither unbounded, arbitrary, nor discretionary. It is limited, and its exercise is governed by the acts of Congress which confer it and by the laws of the land, and his violation or disregard of either is remediable in the courts. If he is induced to issue a fraud order in a case beyond his jurisdiction, or by reason of an error of law in a case within his jurisdiction, and its issue in the absence of any evidence before him to sustain it, or upon facts found, conceded, or established without dispute which do not sustain it is an error of law, or if he is caused to issue it by reason of fraud or gross mistake of fact which renders its issue palpably wrong, the victim of the order is not remediless. He may avoid the decision of the Postmaster General and enjoin the execution of the order in a court of equity on the ground (1) that it was issued in a case which was not within the jurisdiction of the Postmaster General (American School of Magnetic Healing v. McAnnulty, 187 U. S. 94, 107, 23 Sup. Ct. 33, 47 L. Ed. 90); (2) or on the ground that it was issued in the absence of any evidence to sustain it or upon facts found, conceded, or established beyond dispute which do not sustain it, or that its issue was induced by any other error of law; or (3) that through fraud or a gross mistake of fact the Postmaster General fell into a misapprehension of the facts which caused him to issue an order which was palpably wrong (American School of Magnetic Healing v. McAnnulty, 187 U. S. 94, 107, 108, 109, 110, 23 Sup. Ct. 33, 47 L. Ed. 90; Public Clearing House v. Coyne, 194 U. S. 496, 509, 510, 512, 24 Sup. Ct. 789, 48 L. Ed. 1092; Bates & Guild Co. v. Payne, 194 U. S. 106, 111, 24 Sup. Ct. 595, 48 L. Ed. 894; Noble v. Union River Logging R. R. Co., 147 U. S.

Digitized by Google

171, 172, 13 Sup. Ct. 271, 37 L. Ed. 123; Wisconsin Central R. R. Co. v. Forsythe, 159 U. S. 46, 61, 15 Sup. Ct. 1020, 40 L. Ed. 71; Rosenberger v. Harris [C. C.] 136 Fed. 1001, 1003; Missouri Drug Co. v. Wyman [C. C.] 129 Fed. 623, 629; Harris v. Rosenberger, 145 Fed. 449, 76 C. C. A. 225; Wallace v. Adams, 74 C. C. A. 540, 545, 143 Fed. 716, 721; James v. Germania Iron Co., 46 C. C. A. 476, 479, 107 Fed. 597, 600, and cases there cited). The burden was on the complainant in this case to establish that it would suffer irreparable injury because the Postmaster General had issued the order, of which it complained, either without jurisdiction, or by reason of an error of law, or because of a gross mistake of fact which made the order palpably wrong. The first question in the case is, therefore: Did the complainant establish these essential facts by the pleadings, for it introduced no evidence?

The replication was filed on November 24, 1905. By consent of parties six orders were made by the court from time to time which extended the time for complainant to take its proofs until June 2, 1907. On June 20, 1907, the court below denied a motion of the complainant for a further extension of time to take its testimony and a motion of the defendants for a decree upon the pleadings, and set the case down for hearing on bill and answer on July 3, 1907. On the day last mentioned it rendered its decree of dismissal. The court erred in setting the case down for hearing on bill and answer because the complainant had filed and had not withdrawn its replication, and a replication works a radical change in the legal effect of the pleadings. When a case is set down for hearing on bill and answer, all the facts well pleaded in the answer are taken as true, whether responsive to the bill or not (Perkins v. Nichols, 11 Allen [Mass.] 542; American Carpet Lining Co. v. Chipman, 146 Mass. 385, 16 N. E. 1; Banks v. Manchester, 128 U. S. 244, 9 Sup. Ct. 36, 32 L. Ed. 425); but, where it is set down for hearing on bill, answer, and replication, only those averments of the answer which are responsive to the bill are taken as true. All allegations therein in avoidance or justification are denied by the replication, and are taken as untrue. Van Dyke v. Van Dyke, 26 N. J. Eq. 180, 181; Story's Equity Pleading (10th Ed.) p. 418, note 3. But this is a suit in equity. It must be heard anew in this court. A wrong reason is not fatal to a right decree and the question recurs whether or not the decree was right upon the bill, answer, and replication.

Counsel for the complainant suggest that the verification of the answer is defective, but an answer under oath was waived by the complainant, the verification is not material to the issues here, and the answer will be treated as without verification. Where the complainant waives the oath, an unsworn answer which denies material averments of the bill puts the complainant to his proof thereof, and he is entitled to relief only upon the allegations of the bill which are admitted by the answer. Beach's Modern Equity Practice, § 634; Union Bank v. Geary, 5 Pet. (U. S.) 99, 112, 8 L. Ed. 60; Reese v. Barker, 85 Ala. 474, 5 South. 305, 306; Winter v. City Council, 83 Ala. 589, 3 South. 235, 238. The gravamen of the bill was that the complainant was engaged in a prosperous and lucrative banking busi-

Digitized by Google

ness, that irreparable injury would be inflicted upon it by sending back to the remitters the checks, drafts, and money orders which were on the way to the bank through the mails and by the ruin of its reputation and business by the fraud order which was issued without the jurisdiction of the Postmaster General, by reason of an error of law and gross mistake of fact which made it palpably wrong. The defendants admitted by their answer that the order was issued by the Postmaster General; that they were obeying it; that there was a hearing before the Assistant Attorney General on June 16, 1905, before the order was issued; that there was no evidence that the complainant was engaged in any unlawful scheme or device for obtaining money through the mails at that hearing, or before the Postmaster General, except the secret reports of the inspectors, and that those reports and the evidence in refutation of the charge presented by the complainant constituted the evidence upon which the Postmaster General issued the order, and that this evidence was satisfactory to him. The answer contained no other admissions; and it closed with this denial:

"And these defendants deny each and every allegation in complainant's bill contained, save and except those that are hereby expressly admitted to be true."

The answer contained affirmative averments that E. G. Lewis, in the name of the bank, made false representations and promises which induced many persons to send more than two millions of dollars to the complainant and Lewis, a portion of which Lewis had converted to his own use, to the use of the Lewis Publishing Company and of the University Heights Realty & Development Company. But these allegations were and are futile because they were in avoidance of the charge of the bill. They were denied by the replication, and no evidence was introduced to prove them. When a suit in equity is heard on bill, answer, and replication the answer must be taken as true in all matters of confession responsive to the bill, but all matters in avoidance are denied by the replication, and they are not available to the defendant unless proved by evidence. Van Dyke v. Van Dyke, 26 N. J. Eq. 180, 181; Humes v. Scruggs, 94 U. S. 22, 24, 24 L. Ed. 51; Jacks v. Nichols, 5 N. Y. 178; Wilkinson v. Bauerle, 41 N. J. Eq. 635, 7 Atl. 514; Lucas v. Bank of Darien, 2 Stew. (Ala.) 280.

But no relief may be lawfully granted to the complainant upon the pleadings in equity, except upon allegations of the bill that are admitted by the answer. Did the general denial in the answer admit the substantial equities of the bill? Did it admit the averments of fact to the effect that the complainant was conducting a legitimate and lucrative banking business, and that the execution of the fraud order would inflict irreparable injury upon it? If it did not, these averments were not admitted at all, and, as there is no proof of them, the complainant was not entitled to a decree even if the fraud order was beyond the jurisdiction of the Postmaster General, or was induced by an error of law, or by fraud, or by a gross mistake of fact, which made it palpably wrong. The admission or the proof of resulting irreparable injury, continuing or threatened, was as essential to

Digitized by Google

the injunctive relief sought as the admission or proof of causal wrong. Darragh v. H. Wetter Mfg. Co., 23 C. C. A. 609, 619, 78 Fed. 7, 17.

Complainant's counsel insist that the general denial is an admission of all the averments of the bill which are not otherwise expressly admitted, although it in terms denies them. They argue and cite the following authorities to sustain their contentions: (1) That a general interrogatory in a bill is sufficient to require the defendants to answer all the charges it contains (Equity Rule No. 40; McClaskey v. Barr [C. C.] 40 Fed. 559, 561); (2) that a denial of a conclusion of law in an answer which contains an admission or averments of facts which establish that conclusion, is an admission of the conclusion (Union Mutual Ins. Company v. Insurance Co., 24 Fed. Cas. 609 [No. 14,372]; Adams v. Adams, 21 Wall. [U. S.] 185, 190, 22 L. Ed. 504; Caldwell v. Carrington, 9 Pet. [U. S.] 86, 103, 9 L. Ed. 60; Bartlett v. Gale, 4 Paige, Ch. [N. Y.] 503, 507; Robinson v. Stewart, 10 N. Y. 189, 194); (3) that an averment in a bill not denied in any way in an answer is admitted (Sanborn v. Adair, 29 N. J. Eq. 338, 345; Lee v. Stiger, 30 N. J. Eq. 610, 611); and (4) that in equity the complainant is entitled to a specific answer to every material averment of his bill in order that he may know what is admitted and what he will be required to prove, and a general denial or a negative pregnant is insufficient (Holton v. Guinn [C. C.] 65 Fed. 450, 451, 452; McClaskey v. Barr [C. C.] 40 Fed. 559, 561; Reed v. Insurance Co., 36 N. J. Eq. 146, 152; Woods v. Morrell, 1 Johns. Ch. [N. Y.] 103, 106; Pierson v. Ryerson, 5 N. J. Eq. 202, 203; Story's Equity Pleadings [10th Ed.] § 852). The first three contentions are conceded without qualification. The fourth proposition states a general rule which governs when invoked in due time and in the proper manner; but does it prevail after replication? In every case cited by counsel or by Story in which this rule has been applied the objection was taken by exception to the answer or upon bill and answer before a replication was filed and it was generally treated as a matter of form, and opportunity was given to amend and to interpose new denials. No case has been cited in which, after replication, a general denial or a negative pregnant has been held to constitute an admission of the indispensable averments of the bill at which it was leveled. The reason for the rule that denials must be full and explicit, and that general denials and negatives pregnant are insufficient, is that the complainant may know before he files his replication and joins issue what averments are admitted and what he must prove. If he is of the opinion that a general denial or a negative pregnant sufficiently informs him he may waive more specific denials. Equity Rule No. 61 reads:

"After an answer is filed on any rule day, the plaintiff shall be allowed until the next succeeding rule day to file in the clerk's office exceptions thereto for insufficiency, and no longer, unless a longer time shall be allowed for the purpose upon cause shown to the court, or a judge thereof; and, if no exception shall be filed thereto within that period, the answer shall be deemed and taken to be sufficient."

It is conceded that, if exceptions had been filed to the form of this denial, it would have been insufficient, but the defendants would have been given an opportunity to amend their answer and to interpose

Digitized by Google

denials or admissions that would have been sufficient. The election of the complainant to file no exceptions undoubtedly led the defendants to believe that the form in which their averments and denials were presented was admitted to be sufficient, and hence it estopped the complainant from denying its sufficiency. The form of its denial was not of the substance or essence of the answer, and the objection to its sufficiency because it was not more specific was waived by the failure to except to it. It must now "be deemed and taken to be sufficient." A general replication admits the sufficiency of the answer as a discovery, and is a waiver of any objection to the form in which its defenses are presented. I Beach's Modern Equity Practice, § 474; Story's Equity Pleadings (10th Ed.) § 877; McGorray v. O'Connor, 31 C. C. A. 114, 116, 87 Fed. 586, 588.

A general denial or a negative pregnant in an answer in equity, while it is insufficient on exceptions, cannot be deemed an admission of the averments of the bill thus denied after replication, and no relief can be granted upon those averments in the absence of proof. Savage v. Benham, 17 Ala. 119, 132; White v. Wiggins, 32 Ala. 424; Russey v. Walker, 32 Ala. 532, 534; Parkman v. Welch, 19 Pick. (Mass.) 231, 234; United States v. Ferguson (C. C.) 54 Fed. 28; Robinson v. American Car & Foundry Co. (C. C.) 132 Fed. 166; Patton v. J. M. Brunswick & Balk Co., 23 Fla. 283, 2 South. 366, 367. There are so many averments of the bill in this case which are essential to its equity, including among others the allegations relating to the legitimate and lucrative character and to the extent of the business of the complainant, and to the existence, the nature and the extent of the injury, present and prospective, which an enforcement of the fraud order had inflicted and would be likely to inflict upon it, that were not admitted by the general denial in the answer but were in form denied that its equity was not established and no decree for the complainant could therefore have been lawfully granted upon these pleadings in the absence of proof.

For this reason, the decree of dismissal of the bill must be affirmed. It is so ordered.

ADAMS, Circuit Judge, and PHILIPS, District Judge (concurring). We agree with the result reached in the foregoing opinion, but are unable to give our assent to the general classification of cases in which the action of the Postmaster General may be reviewed by the courts. It is said, in effect, that his action is reviewable when it is "palpably wrong," or when, through "gross mistake of fact, he fell into a misapprehension of the facts" resulting in a palpably wrong order. The words "palpably wrong" and "gross mistake of facts" are very comprehensive and elastic, and may be interpreted to mean what we would be unwilling to say would justify injunctive relief in an individual case. Moreover, we doubt whether the rules, as broadly stated, are warranted by the decisions of the Supreme Court, including the case of National Life Ins. Co. of N. A. v. National Life Ins. Co., 28 Sup. Ct. 541, 52 L. Ed. 808, decided by the Supreme Court on April 6, 1908, taken as a whole, and, believing that the recognition of them as law might afford ground for a contest over any fraud

Digitized by Google

order issued, and thereby seriously embarrass the administration of the affairs of a great department of the government, we prefer to express no opinion upon them until a case arises demanding it.

(161 Fed. 295.)

TOWN OF HINGHAM v. UNITED STATES.

In re UNITED STATES.

(Circuit Court of Appeals, First Circuit. April 9, 1908.)

No. 760.

1. EMINENT DOMAIN—PROCEEDINGS FOR CONDEMNATION OF PROPERTY—PROOF OF INCIDENTAL DAMAGES.

In a proceeding for the condemnation of a part of a tract of land, to authorize the court to submit to the jury the question whether the value of the part not taken was diminished by the taking, and, if so, to what extent, as an element of damages recoverable, there must ordinarily have been testimony on the subject from witnesses shown to have special knowledge or qualifications to enable them to form an intelligent and correct judgment, and the fact that the jury viewed the premises cannot dispense with such testimony.

2. SAME—INTEREST ON AWARD.

In a proceeding by the United States to condemn land for public purposes, brought in conformity to Rev. Laws Mass. c. 1, § 7, the rule of Bauman v. Ross, 167 U. S. 548, 17 Sup. Ct. 966, 42 L. Ed. 270, was applied, to the effect that the owner is not entitled to interest pending the proceedings, at least unless he proves that he has in fact suffered loss of the use of the land by reason thereof.

[Ed. Note.—For cases in point, see Cent. Dig. vol. 18, Eminent Domain, §§ 638–643.]

In Error to the District Court of the United States for the District of Massachusetts.

John D. Long and Joseph O. Burdett, for plaintiff in error.

Asa P. French, U. S. Atty., and William H. Garland, Asst. U. S. Atty. (Roscoe Walsworth, Sp. Asst. U. S. Atty., on the brief), for the United States.

Before COLT, PUTNAM, and LOWELL, Circuit Judges.

PUTNAM, Circuit Judge. This is a proceeding on the part of the United States for the condemnation of certain lands belonging to the town of Hingham, for the site, location, and construction of a naval magazine. The proceeding was authorized by Act April 27, 1904, c. 1622, 33 Stat. 324, 338. In support thereof an act was passed by the Legislature of Massachusetts (chapter 446, p. 398, of the Acts and Resolves of 1905), giving the consent of that state to the acquisition by the United States by condemnation of the lands in question for the purposes described in the statute of the United States which we have cited. This act ceded jurisdiction to the United States, and also all tide-water lands belonging to Massachusetts within the area to be acquired.

The petition for condemnation was filed in the District Court on August 7, 1905. This seems to have been the initiation of the pro-

Digitized by Google

ceedings, and it closes with a prayer to the effect that, on proof that the amount awarded had been paid by the United States, the court should enter a decree that the fee of the land and "all and every right, title, and interest in and to the same," should be vested in the United States. The case was tried to a jury, by which the verdict fixing the damages was rendered on the 1st day of November, 1907. A decree of condemnation was entered on December 7, 1907, which concluded as follows:

"It is now, to wit, on this 7th day of December, 1907, further ordered, adjudged, and decreed that upon the payment within 30 days after the date of this decree to the said town of Hingham of the sum of $10,500 damage, and its lawful costs in this proceeding, to be taxed by the clerk, or, upon the neglect or refusal of the said town of Hingham to receive said sums, then upon the payment of said sums into the registry of this court for the use of the said town of Hingham, the fee of said land hereinbefore described, and all easements, rights, and interests therein, be vested in the United States of America, to have, hold, possess, and enjoy for its use, forever."

There never has been any final order in accordance with the closing paragraph of the petition for condemnation, to the effect that, after payment of the award, the District Court would decree that the fee of the land be vested in the United States.

During the course of the trial the town reserved exceptions which make the basis of this writ of error. The facts are better stated by extracts from the bill of exceptions than otherwise, as follows:

"This was a proceeding for condemnation of a tract of about 750 acres of land in Hingham, and about 250 acres of land in Weymouth, for the purposes of a naval magazine, under the act of Congress approved April 27, 1904. The entire tract included in the petition for condemnation is shown upon a plan, entitled 'Plan Showing Ownership of Lands at Hingham and Weymouth, Taken by the United States of America for Purposes of a Naval Magazine, August, 1905,' which may be referred to in argument by either party.

"That portion of the respondent's land included within the tract sought to be condemned consisted of about 35⅛ acres, and was a part of the poor farm of said town. The remaining part thereof contained some 20 acres, and the poorhouse, barn, and other buildings for the accomodation and support of the town poor were situated thereon. The jury took a view of the land so taken and of the said remaining land, with the buildings thereon, and a plan showing both, and showing the contiguity and proximity of said remaining land to the land so taken for a naval magazine, was proved and put in evidence. Said plan is made a part of this bill, and may be referred to. Except as above, and the fact that the taking was for use as a naval magazine, no evidence was introduced tending to show damage to respondent's remaining land, or tending to show the proposed location of said naval magazine upon the tract, or its character or proximity to or distance from respondent's remaining land. Nor, except said view and plan, was there any evidence as to any diminution of accessibility to said remaining part by reason of said taking. The respondent requested the judge to rule that the jury, in considering the damage to the respondent's remaining land, might consider the damage resulting to it from the contiguity and proximity of said remaining land to the land condemned, and that the respondent's counsel might argue to the jury the damage so resulting."

The judge refused so to rule; but he, among other things, instructed the jury as follows:

"I instruct you, gentlemen, that you have no evidence before you which will warrant you in finding that the value of that part left has been dimin-

Digitized by Google

ished or made less in any other way. You have before you no evidence which would warrant you in concluding, from the mere fact that the part left will hereafter adjoin land taken for a naval magazine, that its value is thereby diminished by that fact alone."

This last ruling forms the basis of the first exception brought to our attention. The bill of exceptions proceeds further, as follows:

"The evidence showed that the town had made no use of the land taken since the filing of condemnation proceedings, to wit, August 7, 1905. It had before that permitted one Peterson to excavate and take away therefrom small amounts of sand gravel, of the value of about $200 a year. Peterson testified that previous to August 7, 1905, he had excavated some 3,500 tons, and had left it lying in a pile in the form of screenings. These he has taken away since said date.

"The United States had caused the land described in the petition to be surveyed, and monuments to be erected thereon, marking its boundaries. There was no other evidence tending to show an entry upon the land by the United States.

"The respondent asked the judge to instruct the jury that, having determined the amount of damage to the respondent as of the 7th of August, 1905, they should add thereto interest from that date to the date of their verdict, or such sum as would cover the loss of the use of the land in question between said dates, which request the court refused to give, but instructed the jury as follows:

"'I shall instruct you that there is no evidence here by which it could be found that the town has been deprived of the use of the land since August 7, 1905, and no evidence, therefore, upon which any interest should be awarded by you upon the amount of your verdict, when made up as of the date which I have named.'"

It thus appears that we have two questions. The first is whether there was evidence which the law regards as sufficient to enable the jury to ascertain whether the value of the part of the parcel not taken had been diminished by the taking, and, if "Yes," to what extent it had been so diminished. The other is whether interest from the time of the filing of the petition for condemnation to the time of the verdict of the jury should have been included in that verdict. As to the first question, it is plain that, unless there was evidence which enabled the jury to determine with a reasonable degree of definiteness to what extent the value of the part left had been diminished, it would have been useless for the jury to have undertaken to determine whether it had been in fact diminished. Therefore we have left only the question whether on such an issue, which is evidently more complicated than one merely of the value of land taken, a jury, which may be constituted in a major part, if not in the whole, of men who have no practical knowledge or experience, either as to the topic at large or as applicable to the particular locality involved, can dispose of it without the assistance of the testimony of persons of some skill in either one or both directions. In view of the fact that the parties, and especially the court, are not assumed to know whether or not a jury selected in the ordinary manner may contain a single person capable of forming a valuable judgment on a topic of that kind, it must be apparent that a verdict given without such assistance would be entirely in the air; and it is also apparent that, without some evidence of that character, the court would be wholly incapable on a motion for new trial, or for a reduction of damages, of forming any

Digitized by Google

judgment on the question whether the amount awarded was unjust, or even absurdly so. As to witnesses on an issue of this character, the rule is so thoroughly settled that they must be shown to be qualified in order to render their opinions of value that we need not enlarge on it, unless, perhaps, to cite the general language found in section 437 of Lewis' Eminent Domain (2d Ed.), that:

> "Such a witness must appear to have some peculiar means of forming an intelligent and correct judgment beyond what is presumed to be possessed by men generally."

It seems to follow, therefore, as a necessary conclusion, that the law will not substitute jurymen, who may be wholly inexperienced, in lieu of witnesses on a topic of this character, thus nullifying the fact that as to witnesses it always requires a certain amount of special knowledge on the part of those who testify. It strikes the judicial mind, accustomed to trials of issues of fact, that in this case no substantial proof was offered on this particular issue.

The town of Hingham fails to cite any authorities supporting its position, except that it relies on Parks v. Boston, 15 Pick. (Mass.) 198, 209, 210, 211. We are unable to perceive that this gives the town any support. The real pith of the case is that it sustained the rulings of the trial court, on page 199, and it had no occasion to go further. It appeared there that witnesses had been called on the topic, and the court instructed the jury that, having heard the witnesses and enlightened their consciences as fully as they could, they must give a verdict according to their own opinions and convictions. Such is the customary rule, and it cannot be questioned. Then the court cautioned the jury that, if any one of them had any peculiar knowledge, he should disclose it, and testify to it in court. It also instructed the jury that they were entitled to take counsel of their own experience and knowledge of like subjects, and should consider, not only what the witnesses testified to, but what they had seen in the view which they had taken, and that, if witnesses had sworn to matters of opinion which the jurors, in the exercise of their good sense, did not believe to be correct, they should disregard such testimony. All these things are within the ordinary rules constantly given by the courts to juries, as confirmed by Shoemaker v. United States, 147 U. S. 282, 303, 305, 306, 13 Sup. Ct. 361, 37 L. Ed. 170; and, so far as the case related to the topic now brought to our attention, the opinion of Mr. Chief Justice Shaw, when he spoke in behalf of the court, merely sustained what we have cited. It is true that the opinion seemed to attach special weight to the knowledge acquired by the view because the case related to an estimate of damages; and so the Chief Justice, in speaking for himself alone, observed that he could see no reason why the jury might not estimate the damages without any evidence aliunde. It must be borne in mind here, however, that Parks v. Boston related entirely to estimating the value of the land taken, which is a far less complicated proposition than that before us, where the question with reference to the effect of taking a portion of a parcel of land on the remaining portion depends, of course, on a large range of circumstances, which no ordinary juryman, and also no man not

Digitized by Google

experienced, can be assumed to take into account and properly weigh. Nevertheless, the only question before the court was the correctness of what appeared at page 199, which, as we have explained, was clearly in accordance with common rules.

As to the question of interest, we refer again to Parks v. Boston, which leads up to the other propositions which we need to consider, in that, at page 206 et seq., the opinion insists on, and reiterates and illustrates, the rule that the value of the land taken is to be estimated as of the time of taking. Such being the fact, it would seem to follow that the obligation to make compensation for the land arises prima facie as of the time of taking, so that, therefore, according to the ordinary rules, it should carry interest from that time. It is true that, under the provisions of many Constitutions, and also in accordance with the terms of the pleadings and judgment of condemnation in this case, title is not wholly divested out of the owner until payment is made; but, on fundamental principles, when the title does completely vest, it is as of the time when the taking occurred. In other words, the well-known rule thus explained in Parks v. Boston usually, in Massachusetts, determines the point as of which all the rights of the parties are ultimately fixed. There may be exceptional cases, as was pointed out by us in United States v. Nahant, 153 Fed. 520, 525, 82 C. C. A. 470. The general rule was recognized in Old Colony Railroad Company v. Miller, 125 Mass. 1, 3, 28 Am. Rep. 194, and in Drury v. Midland Railroad Company, 127 Mass. 571, 585. Indeed, this is carried to such an extent that in Imbescheid v. Old Colony Railroad Company, 171 Mass. 209, 50 N. E. 609, the owner was held entitled to interest, although he remained in possession of the lands and took the rents, leaving the corporation which exercised the right of eminent domain to recoup by subsequent suit. This was reaffirmed in Pegler v. Hyde Park, 176 Mass. 101, 57 N. E. 327. In United States v. Nahant, already referred to, we refused to apply so technical a rule, in view of the fact that the town remained in full enjoyment of the use of what was there taken by condemnation, and in view, further, of the fact that the amount of compensation was the cost of reproducing what was taken, rather than any market value, and in view, further, that what was taken had not been reproduced. Consequently we relieved the United States from the payment of interest. We thus practically balanced the matter in accordance with the suggestions of Shoemaker v. United States, 147 U. S. 282, 321, 13 Sup. Ct. 361, 37 L. Ed. 170, already cited. In fact, in United States v. Nahant, the United States claimed no rule other than that which we have said is customary in the state of Massachusetts.

In the present case, however, the United States call our attention to a line of decisions of the Supreme Court, culminating in Bauman v. Ross, 167 U. S. 548, 598, 17 Sup. Ct. 966, 42 L. Ed. 270, to the effect that the payment of damages and the vesting of title in the United States are to be contemporaneous, and that consequently the owner is not entitled to interest pending the proceedings assessing them. Inequitable as it may be that any public authority should be enabled to tie up the lands of any person or corporation for some consider-

Digitized by Google

able time, pending proceedings in litigation, in such a way that the owner is barred from disposing of them as his own, we find that we must sustain the position of the United States on this proposition. The proceedings here were taken in conformity with the statutes of Massachusetts by virtue of Act Aug. 1, 1888, c. 728, 25 Stat. 357 (U. S. Comp. St. 1901, p. 2516), which provides that the proceedings shall conform as near as may be to the practice existing in like causes in the courts of record within the state where the land is situated. The petition for condemnation which we have described was consequently framed on section 7 of chapter 1 of Revised Laws of Massachusetts, from which section was derived the provision in the petition, and in the judgment of condemnation, that, if the appraisal was paid within one month, the fee should vest in the United States. Under a similar state statute, passed expressly to authorize taking the land where the Post Office Building at Boston is now situated, and which statute is set out at large in the margin of Burt v. Merchants' Insurance Company, 115 Mass. 1, the ordinary rule that the value of the land is to be estimated as of the time of taking, and not as of the time of trial, was reaffirmed; but, at page 14, it was observed that the effect of provisions like that which we have cited from the Revised Laws was that the final decision on the question of compensation fixed the time when the compensation should be paid, and the title vest in the United States. What is more peremptory are Edmands v. Boston, 108 Mass. 535, 551, and Norcross v. City of Cambridge, 166 Mass. 508, 44 N. E. 615, 33 L. R. A. 843, to the effect that, where a statute provides that damages shall not be paid until the land has been entered upon, and possession taken, without any provision for compensation for delay in payment, the ordinary rule as to interest does not apply, and interest is not payable until the money becomes due, and that the Constitution of Massachusetts permits this, unless the owner proves that he has been put to trouble or expense, or incurred loss of the use of his land, not considered in assessing the damages. There is no evidence here of anything of that nature; and, therefore, for aught we can see, we must hold that the rulings of the District Court were correct.

The judgment of the District Court is affirmed.

(161 Fed. 300.)

UNITED STATES EXPRESS CO. v. KRAFT.

(Circuit Court of Appeals, Third Circuit. May 13, 1908.)

No. 20.

1. MUNICIPAL CORPORATIONS—STREETS—OBSTRUCTIONS—NEGLIGENCE.

Where a passenger, riding on the running board of a street car, was struck by the shaft of an express wagon standing against the curb, the owner of the wagon was negligent in not exercising due care in placing the wagon and securing the horse; plaintiff being entitled to assume that such care had been taken as to prevent the shafts of the wagon projecting over the running board of street cars.

[Ed. Note.—For cases in point, see Cent. Dig. vol. 36, Municipal Corporations, § 1515.]

Digitized by Google

2 NEGLIGENCE—CONTRIBUTORY NEGLIGENCE—INSTRUCTIONS.

Plaintiff, while riding on the running board of a street car, was injured by coming in contact with an express wagon backed against the curb. The court charged that every one was called on to exercise the best judgment he could by using his eyes and senses to keep out of danger; that if plaintiff could see the obstruction in the street when he was getting on the car, or while the car was moving, he should have avoided putting himself in a place of danger, and if the accident was really plaintiff's fault, because he put himself in a place of danger, he could not recover; but that, in order to entitle plaintiff to recover, the jury must find, not only that defendant was negligent, but that plaintiff was not negligent. *Held*, that such instruction presented the question of contributory negligence to the jury in as favorable a manner to defendant as it had a right to expect.

3. MUNICIPAL CORPORATIONS—OBSTRUCTIONS IN STREETS—INJURIES TO TRAVELERS—CONTRIBUTORY NEGLIGENCE—QUESTION FOR JURY.

In an action for injuries to plaintiff by being struck by the shafts of an express wagon standing against the curb and extending into the street, as plaintiff was riding on the running board of a street car, evidence *held* to require submission of the question of plaintiff's contributory negligence to the jury.

In Error to the Circuit Court of the United States for the Middle District of Pennsylvania.

J. B. Woodward, for plaintiff in error.

John M. Garman, for defendant in error.

Before DALLAS, GRAY, and BUFFINGTON, Circuit Judges.

DALLAS, Circuit Judge. This was an action by the defendant in error, hereinafter called the plaintiff, to recover damages for personal injuries sustained by him, which he alleged were caused by negligence of the plaintiff in error, hereinafter called the defendant; and the latter concedes that "the sole question before this court is whether the plaintiff was guilty of contributory negligence which precluded recovery."

During the afternoon of June 4, 1906, the plaintiff boarded a moving street car, which had just left the beginning of its route at the corner of Broad and South Wyoming streets, in the city of Hazleton. It was an open car, with cross-seats and a running board on the side. It was somewhat crowded, but the plaintiff believed he could get a seat inside, and intended and attempted to do so, although he was still wholly or partly on the running board, when, after the car had gone about 127 feet, a point opposite to the place of business of the defendant was reached. There one of its express wagons, with horse attached, was standing between the track and the curb, and the shaft of this wagon struck the plaintiff, threw him from the car, and seriously hurt him. It is probable that the projection of the shaft over the running board of the car resulted from some immediate movement of the horse; but whether it did or did not is unimportant, for in either case it might have been prevented by due care in placing the wagon and securing the horse, and the plaintiff had a right to assume that such care had been taken.

The learned judge dealt with the subject of contributory negligence in a manner quite as favorable to the defendant as it had any right

Digitized by Google

to expect. He told the jury that "every one is called upon to exercise the best judgment he can, by using his eyes and his senses, to keep out of danger"; and this he said with express reference to the claim of the defendant that "the plaintiff could see the obstruction in the street there, that it was in plain view when he was getting on the car, * * * while the car was moving, and that he ought to have noticed it and avoided putting himself in that way in a place of danger." And he added:

> "If this accident really is the fault of the plaintiff, because he put himself in a place of danger, he cannot recover; but if he exercised the care that any one would, any person of judgment, all the care that could reasonably be expected of him, and the defendant is found to have been negligent, then a complete case would be made out here, which would entitle him to a verdict."

And this statement, in substance, was reiterated in answering the points submitted by counsel, as, for instance, in saying:

> "You must find that the defendant was negligent. If you at the same time find that the plaintiff was negligent, also, your verdict would be for the defendant. You have got to find both those points in favor of the plaintiff before he is entitled to your verdict."

Thus the question of contributory negligence was clearly and correctly submitted to the jury, and we cannot assent to the proposition that the court erred in refusing to decide that, upon the defendant's hypothesis of fact, negligence per se on the part of the plaintiff had been shown. Assuming "that the plaintiff chose to board a moving car when he might have got a seat before it started, or have stopped the car and got a seat after it had started, and would then have been safe, and the obstacle which struck him while on the running board was in plain view," yet it was for the jury to say whether these incidents, taken in connection with all the circumstances, did or did not constitute negligence in fact. They did not establish its existence as matter of law. It is true that where contributory negligence of either class is so conclusively proven that a verdict for the plaintiff, if returned, must be set aside, the court is not bound to submit the case to the jury, but may direct a verdict for the defendant. But the rule generally applicable, and which was rightly applied to this case, is that, as the question of negligence on the part of the defendant is one of fact for the jury to determine, under all the circumstances of the case and under proper instructions from the court, so, also, is the question of whether there was negligence on the part of the plaintiff, which was the proximate cause of the injury. Randall v. Baltimore & Ohio R. R. Co., 109 U. S. 482, 3 Sup. Ct. 322, 27 L. Ed. 1003; Grand Trunk Railway Co. v. Ives, 144 U. S. 408, 12 Sup. Ct. 679, 36 L. Ed. 485; Washington & Georgetown R. R. Co. v. Harmon, 147 U. S. 571, 13 Sup. Ct. 557, 37 L. Ed. 284.

The judgment of the Circuit Court is affirmed.

Digitized by Google

(161 Fed. 303.)

UNITED STATES v. MERRIAM.

(Circuit Court of Appeals, Ninth Circuit. April 7, 1908.)

No. 1,407.

1. EMINENT DOMAIN—WHEN TITLE VESTS.

Under the direct terms of Rev. Laws Hawaii 1905, § 506, title to property acquired by condemnation proceedings does not vest in plaintiff until judgment of condemnation has been filed and recorded in the office of the registrar of conveyances.

2. SAME.

Under Rev. Laws Hawaii 1905, § 506, requiring a judgment of condemnation to be filed and recorded before title to property, acquired by condemnation proceedings, shall vest in plaintiff; and under section 2380, making unrecorded deeds void as against subsequent purchasers without notice, where the United States condemned land, and afterwards received a deed from owners of the property, registration of both the deed and the judgment of condemnation was essential to the security of the government's title, as against subsequent purchasers.

3. SAME—PLANS AND SURVEYS—STATUTE CONSTRUED.

Act April 3, 1905 (Sess. Laws Hawaii 1905) No. 23, § 1, requires the registrar of conveyances to file, on the payment of a fee, any plan of land, if it contains the name of the owner, etc. Section 2 prescribes what writing and mathematical markings shall appear upon a plan authorized to be filed under section 1, etc. Section 3 prescribes the size of the cloth upon which a plan is shown, and the scale upon which it must be drawn. Section 4 forbids the registrar to accept for record or to record any plan after the taking effect of the act. The title reads: "An act providing for the filing of plans and surveys of lands," etc., disclosing no purpose to amend or repeal statutes requiring record of condemnation judgments or of conveyances, where maps are themselves attached to the deed as included parts of the description. Rev. Laws Hawaii 1905, § 506, requires a judgment of condemnation to be filed and recorded before title to property, acquired by condemnation proceedings, shall vest in plaintiff. Section 2380 makes unrecorded deeds void as against subsequent purchasers without notice. Section 2358 requires the registrar to make literal copy of all instruments required to be recorded in his office. *Held*, that Act No. 23 does not cover the subject of recording judgments in condemnation suits, that it is not a substitute for section 506, and that it does not affect the recording of conveyances wherein a description of the property conveyed is included, without reference to plats on file in the registrar's office.

4. MANDAMUS—JURISDICTION—ANCILLARY REMEDY—RECORDING INSTRUMENTS.

The duty of the registrar of conveyances in Hawaii to record a judgment of condemnation in condemnation proceedings, and a subsequent deed acquired by plaintiff from the owners to complete its title, being ministerial, an application for a writ of mandamus to compel him to perform that duty will lie as an ancillary proceeding to carry out of the objects of the main case in eminent domain and to give complete relief.

In Error to the District Court of the United States for the Territory of Hawaii.

The United States applied to the District Court of the United States, in and for the district of Hawaii, for a writ of mandamus, commanding Charles H. Merriam, defendant in error, as registrar of conveyances of the territory of Hawaii, to receive for record and to record certain instruments. The petition alleges that on February 11, 1905, the United States instituted, in the District Court of the United States for Hawaii, a certain action against J. W. Kawai and his wife, and against the estate of Henry Waterhouse, de-

Digitized by Google

ceased, Ida Waterhouse, widow of said Henry Waterhouse, deceased, Eleanor Wood, daughter of said Henry Waterhouse, deceased, and her husband, Arthur B. Wood, against Mary Corbett, daughter of said Henry Waterhouse, deceased, and David Corbett, her husband, and Albert, son of said Henry Waterhouse, deceased, and Gretchen, the wife of Albert. It is alleged in the petition that the action referred to was brought by the United States against the defendant for the purpose of having certain real estate, situated in the territory of Hawaii, and alleged to be the property of the defendants in that action, condemned for public uses, and that such proceedings were had that, on the 14th of July, 1905, a judgment of condemnation was duly and regularly entered, whereby, and by virtue whereof, certain real estate, situated on the island of Oahu, in Hawaii, was condemned to the public use of the United States, and the title thereto was decreed to be in the United States; that thereafter, on the 21st of July, 1905, the estate of Henry Waterhouse, deceased, the executors of the last will and of the estate of Henry Waterhouse, deceased, the widow and daughters of the said deceased, and the other persons, except Kawai and wife, named as defendants in the above referred to action, in order to complete the title of the United States to the said real estate, made and delivered unto the United States a deed, conveying to the United States all their right, title, and interest to the said property; that the said deed was acknowledged, by the parties executing the same, before officers authorized to take acknowledgments, and that the acknowledgments were in the form prescribed by the laws of the territory of Hawaii. It is alleged that Merriam, as registrar, was required, under the law, to receive for record and to record all instruments relative to the title of real estate within the territory of Hawaii, provided such instruments should be executed and acknowledged in the manner prescribed by the laws of the territory; that thereafter, on August 1, 1905, the United States, through its agents, offered to the said Merriam, as registrar of conveyances, for record a copy of said judgment so recovered, as aforesaid, and did likewise offer for record the said deed of conveyance hereinbefore referred to, and tendered to the defendant and the respondent the fees for such recording required by the laws to be paid. It is alleged that the respondent, as registrar, refused to receive the said instruments, or either of them, for record, and refused to record the same; that his action in refusing to receive or record the said instruments is contrary to law, and that petitioner is without remedy, except by writ of mandamus.

The court made an order that the registrar receive for record and record certified copies of the judgment and deed, or show cause why he should not do so. The registrar of conveyances, by plea, objected to the jurisdiction of the court, upon the ground that the writ issued was an original writ, and not necessary or ancillary to the exercise by the court of its jurisdiction. The plea to the jurisdiction was allowed as to the Waterhouse deed, but overruled as to the judgment of condemnation. Thereafter a demurrer to the petition was overruled, and the respondent filed an answer. He admitted that the condemnation suit and entry of judgment had been instituted and made as alleged, made no reference to the allegations concerning the execution of the Waterhouse deed of July 21st, admitted that it was the official duty of the registrar to receive and record all instruments entitled to record under the laws of Hawaii, admitted the offer of the United States for record of a duly certified copy of the condemnation judgment, and the tender of fees, but denied that the United States had, in every respect, complied with the laws of the territory required of persons presenting instruments for record. The registrar then set up that, by virtue of the laws of the territory of Hawaii, as contained in Act No. 23, Sess. Laws 1905, duly approved April 3d, being an act entitled "An act providing for the filing of plans and surveys of land in the office of the registrar of conveyances," it was provided as follows:

"Section 1. The registrar of conveyances shall, on application, accept and file in the archives of his office, on the payment of a fee of one dollar, any plan of land, but such plan must contain the name of the owner of the land and his address, the maker's name and address, the surveyor's name and address, date of survey, scale, the meridian line, areas, name of ili or ahupuaa, district and island, the true bearings and lengths of principal lines, the names

Digitized by Google

of all known adjoining owners, and such data concerning the original title of the land platted as may be known. It shall be necessary that one or more monuments shall be placed on the land, which shall, if possible, connect with the government triangulation system. All such monuments shall be placed as indicated on the plan.

"Sec. 2. A description of the land platted shall be written upon said plan, and all outside corners of said tract shall be substantially marked by monuments on the ground, where practicable; provided, however, that in all cases where tracts of land are subdivided into lots, with the intention of conveying said separate lots by lot number and reference to such plat, it shall be necessary to show the true bearings and lengths of a sufficient number of principal lines, and a sufficient number of monuments shall be located on the ground so as to accurately identify each lot.

"Sec. 3. All such plans must be on tracing cloth of a size not greater than 36 by 42 inches, and the scale thereof must be some one of the following, viz: 10 feet, 20 feet, 30 feet, 50 feet, 100 feet, 200 feet, 500 feet, 1,000 feet or 5,000 feet to an inch.

"Sec. 4. It shall be unlawful for the registrar of conveyances to accept for record and record any plan of land after this act takes effect.

"Sec. 5. This act shall take effect from and after the date of its approval."

The registrar pleaded that the certified copy of the judgment recovered in the condemnation proceedings, offered to him as registrar for record, contained and had as a part thereof, and attached thereto, and made a part thereof, a certain plan, drawing, and blue print, purporting to be a drawing of the boundaries of the land, subject to the said condemnation proceedings, as alleged in the petition; that the said plan, drawing, and blue print did not contain the name of the owner of the land, or the name of the ili or ahupuaa, or the true bearing and lengths of principal lands, or the names of all known adjoining owners, or such data, concerning the original title of the lands platted, as might be known, or a description of the land platted written thereon, nor was such plan on tracing cloth of a size not greater than 36 by 42 inches. The registrar then alleged that it was not his duty to receive for record, or even for filing, the said plan, as hereinbefore described, inasmuch as the laws of the territory of Hawaii made the receipt of such plan unlawful; and that the plan, drawing, and blue print referred to, attached and made a part of the judgment referred to, was an inseparable part thereof.

Hearing was had, and the petition for a writ of mandamus was denied. Writ of error was thereafter sued out.

R. W. Breckons, U. S. Atty., J. J. Dunne, Asst. U. S. Atty., and Robt. T. Devlin, for plaintiff in error.

E. C. Peters, M. F. Prosser, and William F. Fleming, for defendant in error.

Before GILBERT, Circuit Judge, and DE HAVEN and HUNT, District Judges.

HUNT, District Judge (after stating the facts as above). The opinion of the lower court shows that the question there presented was whether the government had a vested right to conduct the condemnation proceedings in eminent domain, which were initiated before April 3, 1905, to final determination, and to register the judgment in the same manner as if the act of April 3, 1905, had never beeen passed. It was thus accepted, apparently, as a correct premise that the new law forbade the record of any map; and, after proceeding to discuss the question whether Act No. 23 merely related to procedure or destroyed a vested right, it was concluded by the learned judge that the United States had no vested right of registration, and was therefore restricted to the record of the order of condemnation in words and figures only.

Digitized by Google

But as the case is presented to us, we will go behind the assumed premise, and ascertain the scope and meaning of Act No. 23, as applied to maps and plans attached to and made integral parts of judgments and conveyances.

Under the eminent domain statutes of Hawaii an action is commenced by filing a petition and issuing a summons thereon. The petition must contain, among other information, a description of each and every piece of land sought to be condemned, and must be accompanied by a map, which shall correctly delineate the land sought to be condemned and its location. The statute, after prescribing how and what notice must be given, and when judgments must be paid, also provides as follows:

"Sec. 506. Final order of condemnation. When all payments required by the final judgment have been made, the court shall make final order of condemnation, which must describe the property condemned and the purposes of such condemnation, a certified copy of which must be filed and recorded in the office of the registrar of conveyances; and thereupon the property described shall vest in the plaintiff." Rev. Laws Hawaii 1905.

The direct language of this provision makes it plain that the judgment must be filed and recorded before the property vests in the plaintiff. By the use of the adverb "thereupon" the law fixes the time when title shall vest; that is, when the act of filing and recording the certified copy of the judgment is done, and not until then. Spangler v. Sanborn, 7 Colo. App. 102, 43 Pac. 905. The reason for requiring such registry must also lie in the general rule that the judgment, unless filed and recorded, would not create a lien upon the realty involved, or conclude any who were not parties to the condemnation proceedings. Lindsey v. Kainana, 4 Haw. 165; Baker v. Morton, 79 U. S. 150, 20 L. Ed. 262.

Further suggestions might be made, such, for instance, as possible consequences between the grantee and an innocent third person, why protection to title demands that a judgment in condemnation, as well as a deed for realty, should be put upon the public records; but it is unnecessary to advance them, for, in the territory of Hawaii, the policy of registration of deeds is expressed by statute, which prescribes that all deeds must be recorded, or they will be void as against subsequent purchasers without notice. Rev. Laws Hawaii 1905, § 2380. Viewed, therefore, from the standpoint of obedience to literal statutory mandate, and considering, as well, the objects underlying recording statutes generally, recording of the judgment was essential to that fixed right of present or future enjoyment which obviously the United States desired, while registration of both deed and judgment was essential to make the government secure in title as against subsequent purchasers.

In construing Act No. 23 we find that its scope is narrower than the court below held it to be. We do not think that the several provisions of the statute indicate that the subject of recording judgments in condemnation suits was covered by its terms, or that the Legislature intended the act to be a substitute for section 506 of the Revised Laws of Hawaii of 1905, or that it affects the recording of conveyances

Digitized by Google

wherein a description of the property conveyed is included without reference to plats on file in the registrar's office.

By the filing of plans of land, referred to in section 1, is meant surveyors' maps, or other plats or plans prepared by draftsmen, which may appropriately be made parts of the archives, and to which reference may be made in conveyances, but which have no relation to independent descriptions of property shown on maps inserted in instruments of conveyance or judgments in condemnation.

Section 2 of the act deals primarily with the subject of what writings and mathematical markings must appear upon a plan authorized to be filed under section 1, and expressly recognizes that conveyances may be made in cases where property is subdivided into lots, with reference to a plan or map filed with the registrar. It is, of course, a common practice to transfer property by incorporating in the body of the instrument a mere general description of the lot by number and block, followed by reference to the particular marking and showing upon a plat or map as on file in the office of the registrar of conveyances of the county or locality in which the property is situated. This method presupposes that there is on file, as part of the archives, a plat of the land referred to, made as the statute may point out, and which, by such reference, becomes part of the description in the conveyance. But Act No. 23, while it may affect registration of judgments and deeds which merely refer for description to plats or plans on file, in that it makes it unlawful to receive plats not conforming to the specific provisions of sections 1, 2, and 3 of the statute, cannot be extended to prevent the record of deeds or judgments in condemnation which are not offered for filing and record as plans of land, and do not attempt to transfer by lot number and reference to plats on file with the registrar, but do convey by independent descriptions, parts of which descriptions are maps or plats attached to and included in the orders or instruments of conveyance.

Section 3 of the act prescribes the size of the cloth upon which a plan is shown, and fixes the scale upon which it must be drawn. It has nothing to do with conveyances, and, so far as it aids us at all in gathering the meaning of the whole act, it confirms the view that only such plans as have been enumerated in the preceding sections are included.

Section 4, in forbidding the registrar to accept for record and to record any plan of land after Act No. 23 became effective, must be construed with relation to the context, which has to do exclusively with plans and surveys of property filed as such, and does not control the record of deeds of property or judgments in condemnation where, as before stated, maps are attached and made integral parts of special description, but which are not brought into the body of the instrument by reference to plans or maps on file in the office of the registrar.

Again, section 2358 of the territorial law of conveyances (Rev. Laws Hawaii 1905) makes it the duty of the registrar to make an entire literal copy of all instruments required to be recorded in his office. In our opinion, whatever may be the indispensable requisites to registration of conveyances, where reference is made to plats on file, special descriptions, made parts of instruments and complete without such references, must

Digitized by Google

be recorded as parts of the instruments, just as the registrar was obliged to record them prior to the enactment of Act No. 23. Jefferies v. East Omaha Land Co., 134 U. S. 178, 10 Sup. Ct. 518, 33 L. Ed. 872; Morgan et al. v. Moore, 69 Mass. 319; Hutchcraft v. Lutwig et al., 13 Wash. 240, 43 Pac. 29; Davis v. Rainsford, 17 Mass. 207; Warville on Abstracts, p. 161; Lunt v. Holland, 14 Mass. 149.

We perceive no repugnancy between the general laws of the territory, relating to conveyances, and Act No. 23, affecting the questions involved in this case. Giving all possible weight to the argument of the defendant in error, it carries us no farther than to a point where we may admit that the case presents difficulty in finding out just what the Legislature meant by Act No. 23, when considered with other statutes bearing upon titles and transfer of property. An aid in the solution of such a difficulty, however, lies, not only in the analysis of the statutes just hereinbefore made, but by resort to the title to Act No. 23, which reads:

> "An act providing for the filing of plans and surveys of lands in the office of the registrar of conveyances."

In United States v. Fisher, 2 Cranch, 358, 2 L. Ed. 304, Chief Justice Marshall said:

> "Neither party contends that the title to an act can control plain words in the body of the statute; and neither denies that, taken with other parts, it may assist in removing ambiguities. Where the intent is plain, nothing is left to construction. Where the mind labors to discover the design of the Legislature, it seizes everything from which aid can be derived; and in such case the title claims a degree of notice, and will have its due share of consideration."

It is significant that nowhere in the title is there a word which discloses that the purpose of Act No. 23 was to amend or repeal the statutes requiring record of condemnation judgments, or record of conveyances of property, where maps are themselves attached to the deed as included parts of the descriptions of the realty. We cannot extend the statute by construction or imply a repeal.

Defendant in error is a public officer; and, as his duty to record is ministerial, he is obliged to perform it. The procedure by application for writ of mandamus may be treated as one made necessary in order to carry out the objects of the main case in eminent domain, and to give complete relief. In this sense it is ancillary, and jurisdiction obtains. Roberts, Treasurer, v. United States, 176 U. S. 221, 20 Sup. Ct. 376, 44 L. Ed. 443.

This disposes of the material questions raised by the pleadings. The judgment of the District Court is reversed, and the cause is remanded, with directions to issue the writ as prayed for.

Digitized by Google

(161 Fed. 343.)

CONSOLIDATED RY. ELECTRIC LIGHTING & EQUIPMENT CO. v. ADAMS & WESTLAKE CO.

(Circuit Court of Appeals, Seventh Circuit. January 7, 1908. Rehearing Denied May 6, 1908.)

Nos. 1,388, 1,394.

1. PATENTS—PRIORITY OF INVENTION—BURDEN OF PROOF ON ISSUE.

The grant of a patent raises a presumption that the patentee was the original inventor of the thing patented, and that the invention was made at the time the application was filed, and one claiming priority of invention has the burden of proving, by evidence which is clear and certain, that the invention was conceived and reduced to practice by another prior to the date of the application. When such proof is made, however, the burden is shifted to the claimant under the patent to establish, if not with equal certainty, at least to the satisfaction of the court, a still earlier date of invention by the patentee.

[Ed. Note.—For cases in point, see Cent. Dig. vol. 38, Patents, § 121.

Priority and continuance of public use of invention as affecting patentability. See notes to Eastman v. Mayor, etc., of City of New York, 69 C. C. A. 646.]

2. SAME—MECHANISM FOR ELECTRIC LIGHTING OF CARS.

The Kennedy patent, No. 740,982, for mechanism for driving dynamos on railway trucks for the purpose of the electric lighting of cars, *held* void on evidence clearly showing that the invention was conceived and reduced to practice by another some months before the patentee's application was filed; there being no satisfactory proof of conception of the invention by the patentee at an earlier date.

Appeal and Cross-Appeal from the Circuit Court of the United States for the Eastern Division of the Northern District of Illinois.

For opinion of court below, see 153 Fed. 193.

The appellant, Consolidated Railway Electric Lighting & Equipment Company, was the complainant below in a bill filed against the Adams & Westlake Company, as defendant, for alleged infringement of three claims of patent No. 740,982, issued to the complainant, as assignee of Patrick Kennedy. The decree of the Circuit Court adjudged infringement of the claims by the defendant, in a single instance, for which injunction was granted, but that the third claim was not infringed thereby; and further adjudged that other alleged infringing devices were not infringements of either claim in suit, under the limited scope awarded, and that an accounting be denied. Assigning error for the limitations thus placed upon the several claims, and denials of relief thereupon, the complainant brings this appeal, and the defendant prosecutes its cross-appeal from the adjudication of validity or infringement of the claims in any particular.

Patent No. 740,982 (in suit) is entitled "Mechanism for Driving Dynamos on Railway Trucks," and was granted October 6, 1903, on application filed June 5, 1903, by Patrick Kennedy as inventor. It purports to be an improvement in the system of electrical lighting for railway cars, with the dynamo driven by the revolution of the car-wheels, but relates specifically "to means for mounting the dynamo upon the truck of a railway car." The description contained in the brief, submitted on behalf of the complainant appellant, is adopted, for the present statement, as follows:

"The patent recites the prior state of the art, in which dynamos had been located either inside the cross-beam of the railway truck, or, as an alternative, suspended from the car-body, and states that these expedients had faults which greatly impaired their utility. The suspension of the dynamo inside the truck brought the driving-pulley closely adjacent to the pulley on the armature of the dynamo, thus necessitating a short belt, which is liable to be

Digitized by Google

deranged, and gives an imperfect transmission of power. It is stated, also, that such arrangement of the parts rendered them difficult of access for removal or repair, and the suspension of the heavy dynamo directly from the bolts gave inadequate support under the severe usage to which railway trucks are subjected. The suspension of the dynamo from the car-body was objectionable, because, when the car is turning curves, the angle of the belt to the armature is changed, and the belt is liable to be thrown from the pulley. The object of the invention is stated as follows:

" 'The object of my invention is to obviate these practical difficulties in the transmission of power from car-axles to dynamos. To this end, I provide certain new and useful combinations of instrumentalities, hereinafter fully set forth, whereby I am enabled to place the dynamo outside of the cross-beams of the truck, and thereby secure the transmission of power thereto through a driving-belt of increased length, whereby the apparatus is made readily accessible for examination, lubrication, etc., whereby it may be readily removed from the truck when required, and whereby it is provided and held in place upon the truck with great stability and security, these advantages resulting in a much greater degree of safety, durability and economy in working than has heretofore been attained in the class of mechanisms to which my invention relates.'

"The specification then proceeds, with a description of the mechanical structure of the device, which, in substance, is as follows:

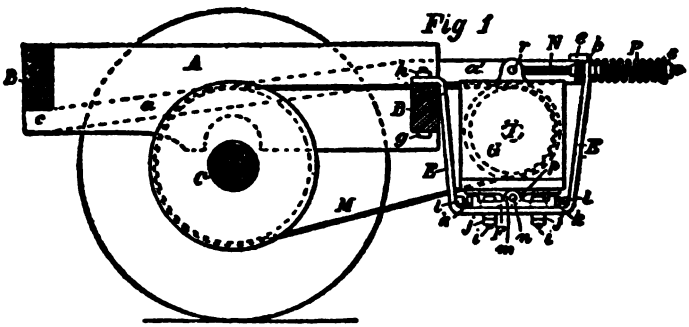

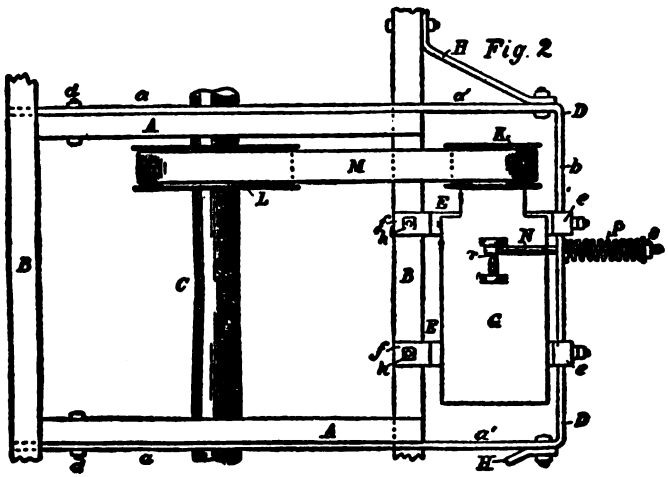

Digitized by Google

"Instead of suspending the dynamo between the axles of the wheels, the inventor suspends it outside of the end-beam of the truck, and this he accomplishes by providing a horizontal bracket frame of U-shape, the two parallel legs, a, a, being bolted to the longitudinal beams of the truck, extending outwardly beyond the cross-beam B, and connected at the ends by an integral cross-arm, b. The bracket-frame is braced by diagonal pieces H, which are bolted to it and to the end-beam, B, thus affording a strong and rigid frame within which a cradle for holding the dynamo is supported. The cradle is composed of two U-shape pieces, E, having horizontal lugs, which rest, respectively, upon the cross-beam, B, of the truck and the cross-arm, b, of the bracket, so that the cradle is suspended from the bracket, and is not dependent for its support upon the bolts by which it is secured. The cradle may be removed readily by loosening the bolts and withdrawing it from the bracket. The dynamo is pivoted to adjustable blocks, F, which are held at the base of the cradle by bolts I passing through slots, so that the blocks may be shifted endwise, and may thus provide for the alinement of the dynamo in parallelism with the car-axle. Set-screws, 1, are provided as a convenient means for effecting this adjustment. The dynamo, G, is pivoted to the blocks at n, and tension is imparted to it by an adjustable spring, P, drawing the dynamo outwardly in opposition to the tension of the driving-belt, M, which extends from a pulley, K, on the shaft of the dynamo to a pulley, L, on the car-axle, C. The spring thus keeps the driving-belt taut, and by its action in conjunction with the adjustment afforded by the pivot-blocks, F, the dynamo is maintained in an upright position, and constantly in proper relation and alinement with the axle, so that the best conditions for driving are at all times maintained.

"The specification concludes with the following statement of advantages:

" 'It will be seen that, by the novel combinations of parts herein described, the dynamo may be located at any desired distance from the driving-axle of the truck, thereby insuring the advantages of a longer driving-belt, this permitting the use of larger pulleys whether on the axle or on the armature-shaft; also that the dynamo and its adjuncts may be readily reached and inspected; also that the dynamo and its adjuncts may be easily removed and replaced as occasion demands; also that, aside from the driving-pulley on the axle, the apparatus may be readily detached from the truck by removing the bolts which attach the bracket-frame to the beams, and that when in use the tension of the driving-belt in its hold upon the armature-pulley is made constant, and held at any desired strain by adjusting the compression of the spring which actuates the dynamo.'

"The first three claims are in issue, and are as follows:

" '1. The combination with a car-truck and a bracket device, extending outside of the beams of said truck, of a removable cradle placed between said bracket and an outside cross-beam of the truck, a dynamo within the cradle and adjustably pivoted thereto, a pulley on the armature-shaft of the dynamo, a driving-pulley on an axle of the truck, a driving-belt extended from the driving-pulley to the pulley on the armature-shaft and means for elastically swinging the dynamo to maintain the tension of the belt as described.

" '2. The combination with a car-truck and a bracket extended outside of the beams of said truck, of a removable cradle placed between said bracket and an outside cross-beam of the truck, a dynamo within the cradle, adjustably pivoted at the bottom thereof, a pulley fast on the armature of the dynamo, a driving-pulley on the axle of the truck, a driving-belt extended from the driving-pulley to the pulley on the armature-shaft, and a compression-spring, provided to swing the dynamo to maintain the tension of the driving-belt as described.

" '3. The combination with a car-truck of a bracket-support outside of an outer cross-beam of the truck, a cradle having lugs at opposite sides of its top to rest upon the bracket and the adjacent cross-beam to suspend the cradle in the space between them, and a dynamo pivotally supported at its bottom within the cradle, of a pulley on the armature-shaft of the dynamo, a driving-pulley on an axle of the truck, a driving-belt extended from the driving-

Digitized by Google

pulley to the pulley on the armature-shaft, a compression-spring for swinging the dynamo against the tension of the belt to control said tension, and means for adjusting the compression of the spring as described.' "

The defendant's device, with which a single car was equipped, adjudged by the decree to be an infringement of claims 1 and 2, but not of claim 3, appears in Exhibit Figures 1 and 2, as follows:

Figure 1

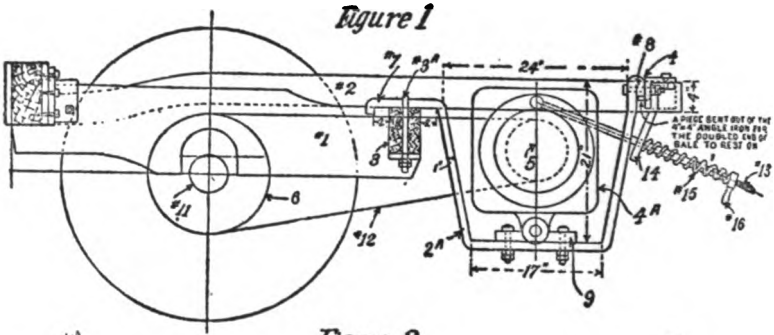

Figure 2.

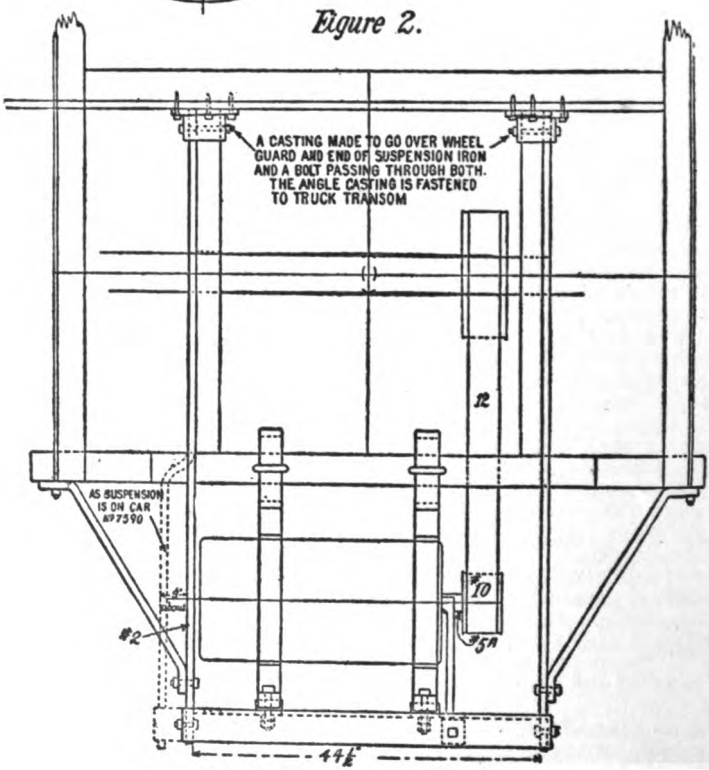

Digitized by Google

In making subsequent devices for this so-called "cradle" the defendant changed the means for suspension and fastening, so that the trial court upheld its contention that the cradle was not made removable in the sense of the patent claims and escaped infringement. The changed form is illustrated in Exhibit Figure 1a, as follows:

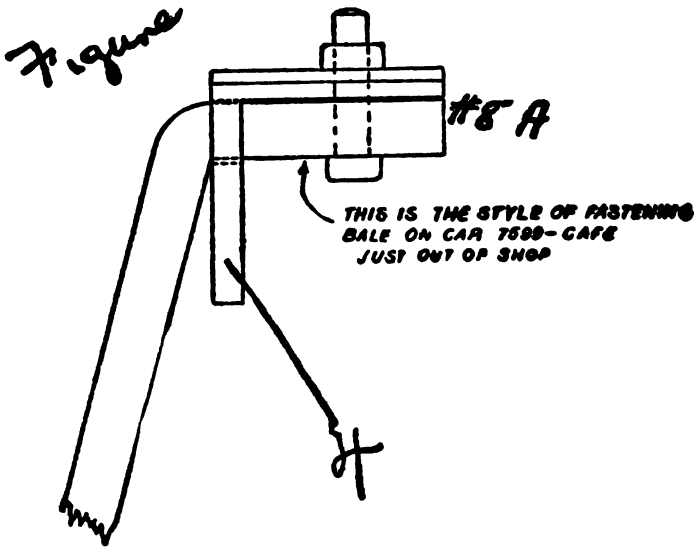

Other facts involved in the controversy are mentioned in the opinion.

Thomas W. Bakewell and Edward Rector, for complainant.
Louis K. Gillson and Charles C. Linthicum, for defendant.

Before GROSSCUP, BAKER, and SEAMAN, Circuit Judges.

SEAMAN, Circuit Judge (after stating the facts as above). The patent in suit, No. 740,982, involves no question of advance in method or means of lighting trains of cars by electricity, with the revolution of the car wheels utilized for generating the current, beyond improvement in the means for suspension and operation of the dynamo outside of the truck-frame of the car Both utility and commercial value of the device are facts in this record, but the narrow scope of the claims alleged to be infringed is likewise well established, if their patentability can be upheld under the evidence. The prior state of the art appears from uncontroverted testimony and exhibits, and no review in detail is needful for present consideration. We deem it sufficient to mention these facts as thus established in this record: The lighting of cars by electricity was well known, and various methods were in general use on railroad trains. An early means was storage batteries, carried on the car and charged for each trip; and later a dynamo and engine were employed for the purpose, carried on the car or train, as exemplified in Arnold's patent of 1887, No. 366,292. Then came the system of using dynamos "driven from the car-axles," as referred to in the patent

Digitized by Google

in suit, and recognized as well known, with various locations of the dynamo and adaptations of means for its operation. Among other prior patents for improvements in the use of this system were two Moskowitz patents of 1901 (Nos. 665,539, 665,540) and two patents issued to Kennedy, the present patentee assignor (No. 685,516 of 1901 and No. 699,187 of 1902), each relating to the place and means for mounting and operating the dynamo. Moskowitz, in the one patent, shows his dynamo placed on the locomotive, belted to a pulley on an axle; and in the other the dynamo is described as "movably connected with the car-body" on a car, and shown as suspended partly from the car bed, and partly from the end of the truck. In both of the above-mentioned Kennedy patents the dynamo is carried in a cradle underneath the car; the one device with cradle irons suspended inside the truck-frame, and the other with the cradle overhanging the end of the truck-frame, referred to in the briefs as the "outside suspension," which was adopted for the improvement in suit. This location is of advantage (as disclosed by the evidence) "in the ready accessibility of the parts for removal and repairs"; and the utility of the suspension means shown in the present patent "consists in its stability and safety."

The decree upholds the validity of claims 1 and 2 of the patent, with limited scope, so that all the devices made by the defendant, except one of earlier construction, "applied by it to café car No. 7,594 of the Pennsylvania Company," for which relief was granted, were pronounced free from infringement; while claim 3 was limited thereby "to the specific form of cradle irons shown in the drawings," and the bill dismissed as to that claim for noninfringement. In the appeal by the complainant broader construction is sought of all these claims, and extension of relief thereupon against all of the defendant's structures in evidence, with the limitations placed upon the alleged invention as the sole question for review. The cross-appeal of the defendant, however, raises the questions of validity, as well as scope of these claims; and the patentability of the device is challenged, under the answer and evidence, as neither an original conception by the patentee, nor otherwise involving invention.

Careful examination of the record and briefs has confirmed the impressions we brought from the oral argument that the complainant's contentions as to the scope of invention, for more liberal interpretation of the claims, to reach other devices made by the defendant than the one originally used and adjudged to be an infringement, are untenable, that error is not well assigned, for the interpretation applied by the trial court, in so far as the relief granted by the decree, was thereby limited, and that the complainant raises no well-founded objection to the decree under its appeal. In view of our conclusions upon the defense arising under the cross-appeal, the foregoing propositions do not require specification, either of the rules of limitation thus applied to the claims, or the facts in evidence for their application.

The defendant seeks reversal of the decree, notwithstanding the seeming unsubstantial measure of relief granted in favor of the patentee, and the twofold defenses set up against the patent and claims in suit are pressed for consideration to that end on the cross-appeal. Both are issues of fact, fairly raised by the evidence, and neither is

Digitized by Google

entirely free from difficulty in the solution. The one presents conflicting testimony as to the conception of means for the patent-device, whether it originated with Kennedy, the patentee, or one Sherbondy, who reduced the conception to practice before the date of Kennedy's application; while the other involves the complicated problem of patentable invention, in the light of the prior art, with irreconcilable conflict in the expert testimony. Determination of either issue hinges, as we believe, on the prima facie force of undisputed facts, for application of the rule of law which casts the burden of proof upon one or the other party, instead of the difficult problem, urged for solution, as to the credibility of witnesses and the intrinsic weight of their testimony, respectively, and thus simplifies the issue when the rule referred to is ascertained. In this view we proceed to the consideration of the first-mentioned defense, as it is obvious that the bill must be dismissed if the evidence is sufficient to defeat the patentee's claim of originality in conception of the device for which monopoly was granted.

The patent (No. 740,982) was issued October 6, 1903, on Kennedy's application, verified April 21, 1903, and filed June 5, 1903. Thus the prima facie case is thereby established of complete conception by the patentee as of the date of his application (Robinson on Patents, §§ 132, 372, 380, 1024; Walker on Patents, §§ 69, 70, 510); and the right of the patentee is well recognized to carry the date back to the actual inventive act, as against rival claimants. (1 Robinson on Patents, § 132.) When the defense of anticipation is set up, it is unquestionable that the defendant is charged, not only with the burden of proof upon that issue, but priority of conception and reduction to practice must be clearly made out, by well-authenticated evidence, to defeat the patent. That burden, however, has been completely satisfied by the proof introduced for prima facie support of the present defense, in so far as evidence of priority in reduction to practice can meet these requirements; and the question thus arises: Is not the burden of anticipating this undisputed fact of priority in making and using the device, thereupon transferred to the claimant under the patent?

The established facts, at the stage of the case referred to, are substantially these: The patentee, Kennedy, and the witness Sherbondy (introduced for the defense) are rival claimants for priority in conception of the substantial features of the patent device. Both are engineers of recognized skill in electric equipment—Kennedy, as chief engineer of the complainant company, and Sherbondy, as chief electrician of the Pennsylvania Railroad—and each was engaged, in the course of duties, in devising improvements for the system of lighting cars by electricity. They were acquaintances, and in business relation for equipments in such line. Prior to 1903 Kennedy had obtained patents for several suspension devices—including one for so-called "outside suspension," in No. 699,187, issued May 6, 1902, on application filed August 17, 1901—and was soliciting, for his company, equipment of various railroads, including the Pennsylvania, with the outside suspension, which he hoped to improve, as none of his earlier devices were entirely satisfactory. Sherbondy (as we assume) was acquainted with these various patents, and with Kennedy's quest, both

Digitized by Google

for opportunity to equip with his means and to improve upon it. In 1901, however, Sherbondy undertook and carried out an equipment of cars for the Pennsylvania Company with the dynamo suspended outside the truck-frame, instead of inside, as theretofore practiced; and as completed in dining car No. 7,580 in December, 1901, it is unmistakable that the suspension means of this equipment responds in every substantial element to the means of the patent in suit. Moreover, it is conceded that Sherbondy, on the arrival of the car at Chicago, about January 3, 1902, exhibited and explained the structure to Kennedy, without comment by either as to the source of conception. Another car, then in the shops, was equipped with like device, and completed February 8, 1902; and drawings then made of the device are in evidence and clearly established.

With the above-mentioned facts of complete anticipation in construction and use—known to the patentee several months prior to his application for a patent—settled by the evidence, we are of opinion that the presumption of invention by the patentee, which arises from the patent, application, and grant, is overcome, prima facie, by such anticipation in Sherbondy's prima facie conception reduced to practice, so that the burden of proof is transferred to the patentee to establish priority in fact. Westinghouse Electric & Mfg. Co. v. Catskill Illuminating & Power Co., 121 Fed. 831, 834, 58 C. C. A. 167. This view of shifting the burden of proof in such event is upheld in well-considered opinions at the circuit (Webster Loom Co. v. Higgins, 15 Blatchf. 446, Fed. Cas. No. 17,342; Thayer v. Hart, Jr. [C. C.] 20 Fed. 693; Westinghouse Elec. & Mfg. Co. v. Saranac Lake Elec. L. Co. [C. C.] 108 Fed. 221, 222; Westinghouse, etc., v. Mutual Life Ins. Co. [C. C.] 129 Fed. 213, 216), and stated in Walker on Patents, § 510. In Clark Thread Co. v. Willimantic Linen Co., 140 U. S. 481, 492, 11 Sup. Ct. 846, 851, 35 L. Ed. 521, however, the opinion by Mr. Justice Bradley states the rule in like case, in qualified form, as requiring "the plaintiffs, in rebuttal, to show, if not with equal certainty, yet to the satisfaction of the court, that the invention" claimed in the patent preceded the date thus shown with certainty, in respect of a device which anticipated the patent dates. For the purposes of the present case we deem it immaterial which of the rules thus stated is applied to the evidence for determination of the issue, as neither side furnishes satisfactory and convincing proof, consistent with other testimony, of a well-defined perfection of the alleged invention at any period prior to December, 1901, within the rule as stated in the last-mentioned opinion—bearing in mind, as there remarked (page 489), that "a conception of the mind is not an invention until represented in some physical form."

While it is true that drawings are introduced on behalf of the patentee, exhibiting the suspension means, with testimony which tends to fix their date, as stated in complainant's brief, "somewhere between July and the last of October, 1901," each exhibit rests on the recollection and credibility of witnesses for the alleged date, at best stated indefinitely; and the drawing, which is relied upon for complete representation of the device, shows erasures and changes, which are not

Digitized by Google

satisfactorily explained, as made before 1902. An exhibit "rough sketch," in a memorandum book of a witness (Sexton), is introduced, as tending to show disclosure of the patent-device to this witness, by Kennedy, about November 17, 1901. Expression of the means of an alleged invention, in a drawing or sketch, is frequently the best attainable evidence of the needful "representation in physical form," and may rightly be accepted as satisfactory proof of such fact, when fairly authenticated, definite, and reasonable under all the circumstances. The exhibits referred to, however, are not so authenticated in date, consistently with other facts, that they can be accepted, in our view of the circumstances, as satisfactory confirmation of the testimony of the patentee that he had perfected and communicated the device of his patent, prior to the alleged conception by Sherbondy, which was reduced to practice so long in advance of Kennedy's application.

Without attempting to detail the extended testimony in reference to the various efforts to provide for locating the dynamo outside the truck of the car, the following circumstances are pointed out as uncontroverted and anterior to the Kennedy application, filed June 5, 1903, namely: (a) When Sherbondy completed his equipment of cars, in December, 1901, the only device for like location of the dynamo, which had been made or applied by Kennedy, was that described in his patent of 1902 (No. 699,187) which was applied to Grand Trunk cars about June, 1901, and later was placed on a Santa Fé car, and reported satisfactory. (b) Assuming that he was then contemplating and working out an improved device, Kennedy had neither applied nor made one which embodied the simple adaptation of the present patent, before his attention was called to the device operating on Pennsylvania car No. 7,580. (c) Nor does it satisfactorily appear from the testimony that any portions of equipment, specially adapted for the device of this patent, were actually made by Kennedy or his company prior to 1902—as the shop orders in evidence are equally referable to the earlier devices—while it does appear that Kennedy's directions (January 4, 1902), for Santa Fé cars to be "equipped with the outside suspension" (theretofore ordered by that company), were written after his examination of the Pennsylvania car. (d) Kennedy's application for the patent (No. 699,187) of 1902 was filed August 17, 1901, and he was absent in Europe after that date until about October 8th. He testifies that upon his return he "took up the question of improving the outside suspension generally, and working out the details particularly." (e) While Kennedy testifies that Sherbondy's device was made under Kennedy's conception, as communicated when they met at Ft. Wayne, November 28 or 29, 1901, his statement of what was said is insufficient for such communication, namely: "I told him what I was doing, in a general way, in the design of a new outside suspension, which would overcome" objections to the earlier device. This is expressly denied by Sherbondy; but, aside from the dispute of fact, no clear communication appears of the single feature on which patentability must rest, simple as that element is when disclosed. (f) In Kennedy's version of the conversation with Sherbondy, November 28th or 29th, in which it was understood that each was working out a method of outside suspension for practical use, no claim or suggestion

Digitized by Google

appears on the part of either that patentable invention or application for a patent was in contemplation; nor was interference claimed or suggested by either when Sherbondy exhibited his device as completed on car No. 7,580.

Under the state of facts thus appearing, we are of opinion that the patentee fails to establish such priority in conception over the Sherbondy device as must be required to uphold patentability, within either of the above-mentioned definitions of the rule to be applied. No circumstance in the case authorizes acceptance of the patentee's testimony as outweighing that of Sherbondy upon such issue, while the witness Sherbondy appears to be disinterested in so far as concerns the present controversy, and his testimony is consistent with the undisputed facts. In no view of the record are we impressed with the sufficiency of the evidence to carry Kennedy's alleged invention back of 1902, so that the undeniable anticipation of that date by Sherbondy leaves the decree without support.

The decree of the Circuit Court is reversed accordingly, with direction to dismiss the bill for want of equity.

(161 Fed. 352.)

MURRAY v. D'ARCY.

(Circuit Court of Appeals, Sixth Circuit. May 14, 1908.)

No. 1,769.

PATENTS—INFRINGEMENT—SPRING SEAT.

The Murray patent, No. 692,535, for a spring seat, if conceded validity, discloses patentable invention only in the particular means shown for attaching the springs to their support. As so construed, *held* not infringed.

Appeal from the Circuit Court of the United States for the Western District of Michigan.

W. F. Murray, for appellant.

F. L. Chappell, for appellee.

Before LURTON, SEVERENS, and RICHARDS, Circuit Judges.

SEVERENS, Circuit Judge. The appellant, who was complainant below, charges the defendant in this bill with infringing the rights secured to him by letters patent No. 692,535, issued February 4, 1902, for improvements in spring seats. The claims which are said to be infringed are the first, third, and fifth, as follows:

"1. In a spring seat, the combination of a seat-frame, metal cross-strips having inturned edges with perforations, and flat upturned hangers at the ends to be secured to the frame, and coiled springs whose ends engage the perforations in the cross-strips, substantially as shown and described."

"3. As a new article of manufacture, a cross-strip, having both its edges inturned to within a short distance of its ends, with perforations in the inturned edges and the ends upturned to form hangers, substantially as shown and described."

"5. The combination of a frame, cross-strips secured at their ends to the frame and having inturned edges having perforations therein, and coiled springs whose ends engage the perforations in the cross-strips, substantially as shown and described."

Digitized by Google

As is seen, the first and fifth are for combinations of elements going into the construction of a spring seat, and the third is for one of the elements of such a combination; that is, for the spring support. As all the other elements were confessedly old, or clearly proven to have been so, the novel feature of all these claims is the spring support described in this third claim; and it is upon the merits of the invention of this part of a spring seat that the controversy turns. Enough of this support for the springs to enable one to understand the form of its construction and adaptations is exhibited by Fig. 3 of the drawings, which shows about one-half of it; the other section corresponding in all particulars.

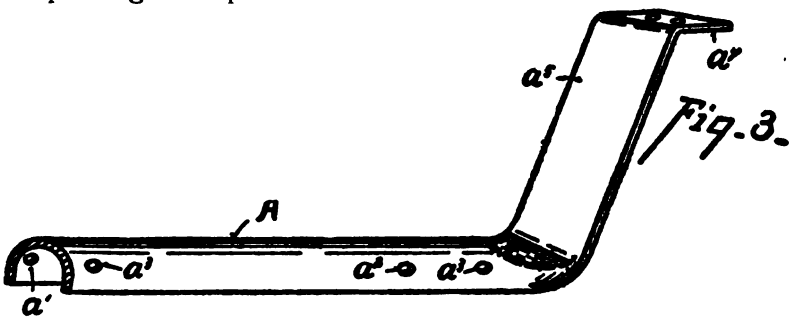

The letters, a^1, a^2, a^3, show the perforations through which the lower coil of an inverted conical spring is turned or screwed. There are four of such perforations, two on each side of the support, and it is contemplated that the spring will be turned in until it shall pass through the fourth perforation; "the spring being locked thereby securely in place because of the rise in the spiral." Much importance is attached by the patentee to the fact that in his invention he turns the edges of a flat metal strip in. What he means is shown in Fig. 3, which we have reproduced. Of this he says:

"It is seen that a cross-strip thus formed offers a greater resistance to any bending strain without increasing the amount of metal in it."

It is, indeed, readily seen. The property in a metallic strip that it offers a greater resistance to a downward pressure, in proportion to the amount of metal in it, when set on edge than when laid flat, is a matter of common knowledge, and by consequence that any approximation to a vertical position would proportionately afford the same advantage. Hunt, in his patent for improvements in spring bed bottoms, granted January 9, 1900, made use of this property by putting his metallic strips for spring supports in a vertical position, instead of laying them flat, as others had done. We may note here, also, that Hunt made perforations in this spring support through which he turned the lower coil of the spring. This secured the spring in an upright position in the longitudinal direction of the spring support, but not laterally; this being provided for by a cross-strip. And Hoey, in his patent of 1901, had employed the same principle when he made his spring supports of a tube perforated at the top and bottom, and

Digitized by Google

taking down the straightened end of his springs through these perforations. This held the spring rigidly upright. Murray took the upper half of Hoey's tube and claims the same advantage from it, namely, that turning some parts of it into a vertical position makes it stronger than if it lay flat. This same idea was pressed upon us as one of novelty in American Carriage Co. v. Wyeth, 130 Fed. 389, 391, 71 C. C. A. 485. But it was answered that the idea was old and familiar. D'Arcy takes the lower half of Hunt's tube. He prefers to make it in a V-form, but says it may also be made in a U-form, which is undoubtedly the same in principle. We think there was nothing patentable in the material or shape of complainant's spring support.

There is nothing left in which to find invention, except his peculiar device for attaching the springs to their support. This was done by making round "holes," as he calls them in his specifications and shows them in his drawings, adapted to the size of the wire of his coils, and turning the lower end of his coil around through the holes, as he says, "in a manner similar to that used in driving a screw." We have already noticed that Hunt made like perforations in his spring support; but that was quite vertical, and not partly so, as in Murray's. In a patent granted to Cloyes in 1898, flat metallic strips were used, and "tongues were struck up from the body of them and bent down over the coil of the spring, closely upon the strip." Entire loops were struck up from the spring support in Fortney's patent of 1896, through which the lower coil of the spring was turned. Van Cise, in his patent of 1896, shows a "long wide loop" struck up from his flat metal spring support. "These loops," he says, "are of suitable length to take one coil of the spring inside the slot so formed." This is similar to the slot in the spring support of the defendant, to be noticed later on. Other similar forms of spring supports are shown in patents earlier than Murray's. None of them, however, shows exactly the same construction. But enough has been recited to indicate that Murray's invention stands on very narrow grounds. Other and earlier modes of securing the springs in such structures upon their supports crowd his invention on every side, and the best that can be said for it is that it may be valid for the particular means which he devised and explains in his specifications. And so much we are inclined to concede to it, in view of the presumption afforded by the grant of his patent, notwithstanding it would seem that, upon adopting the principle of strengthing his spring support by turning down its edges, the old art would naturally suggest to him this manner of seating his springs.

Construed, as we think the Murray patent must be, as extending in respect of patentable novelty only to his particular method or means of attaching the springs to their support, it follows that there is no infringement. The springs of the complainant are attached by turning them through the holes on opposite sides, and they become fixed in their position by friction induced by the rise in the spiral of the coils. In the defendant's, they are first collapsed at the lower end and pushed in under tension through slots in the support. There the provisional tension is released, and the resiliency of the collapsed coil of the spring expands it against the ends of the slot, and the position

Digitized by Google

of the spring is thereby secured and maintained. Murray's spring support has no adaptation for D'Arcy's method of seating the springs upon their base, nor could D'Arcy seat his springs upon Murray's base without altering it into a different structure from that which Murray described and claimed. It was precisely upon this distinction that the examiner of the Patent Office distinguished D'Arcy's invention from Murray's, and upon which the patent to the former was allowed. Judge Knappen founded his conclusion in the court below upon the same ground in a well-reasoned opinion.

The decree of the Circuit Court must be affirmed, with costs.

(158 Fed. 88.)

FISHBACK v. FOND DU LAC & N. E. RY. CO.

(Circuit Court of Appeals, Seventh Circuit. October 1, 1907.)

No. 1,351.

CORPORATIONS—INCREASE OF CAPITAL STOCK—WISCONSIN STATUTE.

St. 1898, Wis. § 1774, authorizes the stockholders of a corporation to amend its articles of organization so as to increase or diminish its capital stock, and provides that a certified copy of the amendment shall be filed in the office of the Secretary of State and also recorded in the office of the register of deeds where the corporation is located, and that "no amendment shall be of effect until so recorded and such amendment shall be void until so filed and recorded." *Held* that, under such provision, an amendment increasing the capital stock of a corporation upon being filed did not relate back to the time of its adoption, but that until the date of its filing the capital stock for all legal purposes remained as before it was adopted.[1]

In Error to the Circuit Court of the United States for the Northern District of Illinois.

The facts are stated in the opinion.

Charles Quarles, for plaintiff in error.

John H. S. Lee, for defendant in error.

Before GROSSCUP, BAKER, and SEAMAN, Circuit Judges.

GROSSCUP, Circuit Judge. The action in the Circuit Court was to recover from plaintiff in error, a citizen of Illinois, the sum of fifteen thousand dollars, paid to him by defendant in error, a citizen of Wisconsin, under a contract wherein plaintiff in error was to sell the bond issue of defendant in error, or as much thereof as might be necessary for the commencement and carrying on of the construction of a railroad project by the defendant in error, amounting to one million, seven hundred and fifty thousand dollars; the fifteen thousand dollars sued upon having been paid plaintiff in error, in advance, for such services.

The declaration, when the case went to trial, besides the common counts, contained a special count alleging failure to perform by plain-

[1] See note at end of case.

Digitized by Google

tiff in error, and rescission by defendant in error, with demand for the repayment of the money advanced. Several defenses having been interposed, the case went to a jury, upon whose verdict in favor of defendant in error for the sum claimed, a judgment was duly entered.

The only defense brought here for review grows out of section 1773 of the statutes of Wisconsin of 1898, reading as follows:

"No such corporation shall transact business with any other than its members until at least one-half of its capital stock shall have been duly subscribed and at least twenty per centum thereof actually paid in; and if any obligation shall be contracted in violation hereof the corporation offending shall have no right of action thereon,"

—the claim of plaintiff in error being that at the time of the transaction sued upon, out of which the obligation to repay arises, twenty per cent. of the capital stock of defendant in error had not actually been paid in. The original capital stock of the defendant in error was ten thousand dollars; and there was proof sufficient to go to the jury to show that two thousand, or twenty per cent., had been paid in at the time the contract with plaintiff in error was made. But it is averred that before that time a resolution had been passed, in pursuance of the laws of Wisconsin, increasing the capital stock to seven hundred and fifty thousand dollars; which resolution, subsequently to the transaction sued upon, was filed with the Secretary of State, whereby, by relation back to the time the resolution was passed, the capitalization was seven hundred and fifty thousand dollars, at the time the resolution was passed, and therefore at the time of the transaction sued upon—the whole point of this defense turning upon the question whether the increased capitalization dates from the passage of the resolution, or from its filing with the Secretary of State.

Section 1774 of the Revised Statutes of 1898 of Wisconsin provides:

"Any corporation organized under this chapter may, at any meeting of its members, by a vote of at least two-thirds of all the stock then outstanding, in case of stock corporations, without stock, unless a greater vote shall be required in its articles, amend its articles of organization so as to increase or diminish its capital stock. * * * When adopted, a copy of such amendment, with a certificate thereto affixed, signed by the President and Secretary, or if none, the corresponding officers, and sealed with the corporate seal, if there be any, stating the fact and date of adoption of such amendment, and that such copy is a true copy of the original, shall be filed in the office of the Secretary of State, and within thirty days after such filing by the Secretary of State, a like copy shall be recorded in the office of the registrar of deeds where such corporation is located. * * * And no amendment shall be of effect until so recorded, and such amendment shall be void until so filed and recorded."

It seems clear to us that such increase of capital stock is not effective until filed and recorded, for such is the exact language of the statute. And it seems equally clear to us that until such increased capitalization does take effect, the preceding capitalization remains in effect, for otherwise the capitalization during a certain period of the company's existence would not be a fixed figure, but would be in nubibus; dependent, not as the law contemplates upon the record open to the public, but upon whether a certain resolution, wholly within the keeping of the corporation's officers, shall or shall not thereafter be filed for record. And upon this view, as to what under the law of Wisconsin

Digitized by Google

was the capitalization of defendant in error at the time of the transaction sued upon, the defense under review disappears.

The judgment of the Circuit Court is affirmed.

NOTE.

Compliance with Charter, Constitutional or Statutory Requirements as to Increase of Capital Stock.

I. Validity of Requirements.

[a] (Cal. 1880) Code, § 359, authorizing the increase of corporate stock on the written assent of the holders of three-fourths of the capital stock, being in contravention of Const. art. 12, § 11, prohibiting a corporation from increasing its stock except on the assent of the holders of a majority of the stock at a meeting called for that purpose, on 60 days' notice, is unconstitutional and void, and hence an increase under such section was void.—Ewing v. Oroville Min. Co., 56 Cal. 649.

II. Construction of Requirements.

[a] (U. S. 1873) Where, by the charter of a corporation, its capital stock is fixed at a certain sum, with authority to increase it at the discretion of the stockholders, no formal vote of the stockholders is necessary to make the increase. The requisite assent of the stockholders may be shown by their conduct and acquiescence.—Payson v. Stoever, Fed. Cas. No. 10,863 (2 Dill. 427).

[b] (U. S. 1895) Laws Tex. 1871, p. 66 (Sayles' Civ. St. art. 576), provided that any corporation might increase its capital stock, not exceeding double the amount of its authorized capital, by a vote of the stockholders. Laws 1874, p. 122 (Sayles' Civ. St. arts. 571, 573), amending the act, provide that any corporation may amend its charter by filing such amendments, authenticated as an original charter, and that no amendments violative of the Constitution or laws of the state, or of any of the provisions of the act, should be of any force or effect. *Held*, that the limitation on the power of corporations to increase their stock, imposed by the original act, was not removed by the amendments, and that corporations formed under the amended act have no power, by changing their articles of incorporation, to increase their capital beyond double its original amount.—Laredo Imp. Co. v. Stevenson, 13 C. C. A. 661, 66 Fed. 633.

[c] (U. S. 1896) The general incorporation act of Tennessee, as adopted in 1875, provides that a corporation organized under it "may, by by-laws, make regulations concerning the subscription for or transfer of stock, fix upon the amount of capital stock, * * * the division of the same into shares, the time required for payment thereof," etc. An amendment, adopted in 1883, provides that "any corporation which may desire to change its name, increase its capital stock," etc., may do so by filing a certificate, with the same formalities as its original articles of association. *Held*, that prior to the amendment of 1883 no power was given by such act to corporations organized under it to increase their capital stock, and that an attempt by such a corporation to increase its stock by a by-law was of no effect, and the subscriptions to the increased stock were void.—Ross-Meehan Brake Shoe Foundry Co. v. Southern Malleable Iron Co. (C. C.) 72 Fed. 957.

[d] (Ala. 1882) Where a life insurance company was organized under the general incorporation law, a clause in the declaration reciting the company's intention and privilege to increase its capital stock and number of shares whenever deemed proper and expedient was not sufficient to authorize such increase at the will of the company.—Grangers' Life & Health Ins. Co. v. Kamper, 73 Ala. 325.

[e] (Ala. 1887) Under article 13, § 6, Const. providing that "no corporation shall issue stock or bonds except for money, labor done, or money or property actually received," an increase in the value of the property in which the original stock is invested will not justify an issue of additional capital stock

Digitized by Google

to the stockholders as a stock dividend.—Fitzpatrick v. Dispatch Pub. Co., 83 Ala. 604, 2 South. 727.

[f] (Cal. 1905) Under Const. art. 1, § 22. declaring that the provisions of the Constitution are mandatory and prohibitory, unless expressly declared othwise, article 12, § 11, prohibiting any increase of the capital stock of the corporation without the consent of the holders of the majority of the stock, at a meeting called for that purpose giving 60 days' public notice, as well as Civ. Code, § 359, making substantially the same requirement, must be construed as prohibiting an increase in capital stock without the 60 days' notice, even though all the stockholders are present at the meeting and consent to the change.—Navajo Mining & Development Co. v. Curry, 147 Cal. 581, 82 Pac. 247, 109 Am. St. Rep. 176.

[g] (Ill. 1896) Act June 15, 1895, requiring all companies, "at present organized," that may increase their capital stock, to pay a fee, includes corporations subsequently organized, since the object of the act was to raise revenue, and Rev. St. c. 131, § 1, provides (subdivision 1) that statutes shall be construed so as to carry out the intent with which they were enacted, and (subdivision 2) that words in the present tense include the future.—People v. Hinrichsen, 161 Ill. 223, 43 N. E. 973.

[h] (Ill. 1897) Where the charter of a corporation fails to state by whom the power to increase its capital stock is to be exercised, its board of directors have not, merely by virtue of their position as directors, the authority to increase the capital stock without the assent of the stockholders. 63 Ill. App. 593 (1895) affirmed.—McNulta v. Corn Belt Bank, 164 Ill. 427, 45 N. E. 954, 56 Am. St. Rep. 203.

[i] (Ind. 1860) The regulations in the charter of a corporation touching the increase of stock supersede contracts, and govern in making such increase.—Ohio Ins. Co. v. Nunnemacher, 15 Ind. 294.

[j] (Mo. 1903) Under Const. art. 12, § 8, providing that the stock and bonded indebtedness of corporations shall not be increased except in pursuance of the general law, nor without the consent of the persons holding the larger amount in value of the stock first obtained at a meeting called for the purpose, first giving 60 days' public notice, as may be provided by law, and Rev. St. 1899, § 962, providing that any corporation may increase its capital stock or bonded indebtedness with the consent of the persons holding the larger amount in value of the stock, which consent shall be obtained at a meeting of the stockholders, called for that purpose, 60 days' notice of the time and place of the meeting having been given, etc., no notice is necessary to entitle a corporation to increase its capital stock with the unanimous consent of all the stockholders in meeting assembled.—State ex rel. Norvell-Shapleigh Hardware Co. v. Cook, 178 Mo. 189, 77 S. W. 559.

[k] (N. Y. 1854) The officers, directors, and stockholders of an incorporated company cannot, even by a unanimous agreement made under an honest misapprehension of their powers, increase the capital of the company beyond the amount authorized by charter.—People v. Parker Vein Coal Co., 10 How. Prac. 543.

[l] (N. Y. 1884) A corporation has no implied authority to increase or diminish its capital stock, and can only do so when and as authorized by statute.—Sutherland v. Olcott, 95 N. Y. 93, reversing (1883) 29 Hun, 161.

[m] (N. Y. 1904) Stock Corporation Law (Laws 1900, p. 1074, c. 564) §§ 44–46, authorize a corporation to increase its capital stock by a vote of a majority of the shares of stock, and by General Corporation Law (Laws 1890, p. 1062, c. 563) § 11, a corporation may make by-laws for the management of its affairs. Plaintiff and another promoted a corporation, and contracted that there should be $150,000 of common stock, that the property they placed in the corporation should be taken at a valuation of $50,000, and that plaintiff should have one-sixth of the plant. The corporation was organized under the stock corporation law, and $25,000 worth of stock issued to plaintiff; and a by-law provided that whenever the capital stock of the corporation should be increased each bona fide stockholder should be entitled to purchase at par an amount of stock in proportion to the number of his shares. *Held* that, in the light of the circumstances and the law, the contract did not mean that additional stock should not be issued when done in good faith, and for the ben-

Digitized by Google

efit of the corporation.—Martin v. Remington-Martin Co., 95 App. Div. 18, 88 N. Y. Supp. 573.

[n] (S. C. 1904) Under Civ. Code 1902, §§ 1851, 1888, prescribing that a corporation increasing its capital stock shall pay the fees required on an issuance of a charter or a renewal thereof, the same fees, based on the increase of the stock, are to be paid as for an original charter.—Pacolet Mfg. Co. v. Gantt, 68 S. C. 199, 46 S. E. 1005.

[o] (Tex. 1895) An attempt to increase the capital stock of a company from $100,000 to $1,200,000 by an amendment of the company's charter, under Rev. St. art. 571, tit. 20, was ultra vires, under article 576, limiting the increase of capital stock to an amount not exceeding double the amount of its authorized capital, and by article 573, which provides that "no amendment or changes violative * * * of the provisions of this title shall be of any force or effect."—Kampmann v. Tarver, 87 Tex. 491, 29 S. W. 768.

[p] (W. Va. 1898) Under Code 1891, c. 53, § 23, the increase of capital stock of a corporation is entirely under the control of the board of directors for the time being; and the only limitation upon the board in respect thereto is "that the maximum capital be not exceeded."—Greenbrier Industrial Exposition v. Ocheltree, 44 W. Va. 626, 30 S. E. 78.

III. Necessity of Compliance and Showing Thereof.

[a] (U. S. 1897) Where a statute requires the payment of a tax by a corporation upon increasing its capital stock, a court, in a suit involving the validity of such an increase of stock, will presume, in the absence of proof to the contrary, that the tax has been paid.—Peck v. Elliott, 24 C. C. A. 425, 79 Fed. 10, 38 L. R. A. 616, reversing decree Ross-Meehan Brake Shoe Foundry Co. v. Southern Malleable Iron Co. (C. C. 1896) 72 Fed. 957.

[b] (N. H. 1892) Gen. Laws, c. 147, § 4, provides that corporations may adopt by-laws not repugnant to the laws of the state. Chapter 148, § 6, permits the increase of the capital of a corporation at "any meeting called for the purpose." A by-law of a corporation provided that "any business within the power of the corporation may be transacted at annual meetings, although the subject-matter thereof is not specified in the notice." *Held*, that an increase of the capital was not authorized by a vote at an annual meeting, where the notice merely recited that the meeting would be held at a specified time and place to act on the report of the directors, "and to transact any other business that may be brought before the meeting," since the by-law was controlled by the statutory provision.—Jones v. Concord & M. R. R., 68 N. H. 119, 38 Atl. 120.

[c] (N. Y. 1880) Laws 1848, c. 40, relating to the formation of corporations for manufacturing purposes, provides (section 20) that any company formed under the act may increase or diminish its capital stock by complying with its provisions. Section 21 provides for a meeting of the stockholders for the purpose of availing themselves of the provisions of the act, and declares that, when a company desires to call a meeting of the stockholders for such purpose, it shall be the duty of the trustees to publish the notice, signed by at least a majority of them, in a newspaper in the county, at least three successive weeks, and to deposit a notice in the post office, addressed to each stockholder. *Held*, in an action brought to recover of defendant, as a stockholder in a manufacturing corporation, of which plaintiff was appointed receiver, money due on an assessment of stock issued on an increase of capital, that, in the absence of any proof that due and sufficient notice was given to all the stockholders, the book of minutes and the certificate, showing that more than two-thirds of the stockholders appeared in person or by proxy, and voted for the increase of the stock, establish, as against defendant, that the stock was increased at a regularly assembled meeting of the stockholders.—Cuykendall v. Douglas, 19 Hun, 577.

[d] (Pa. 1893) Where the Constitution of a state provides that neither the debt nor stock of a corporation shall be increased without the consent of a majority of the stockholders, given at a meeting to be held after 60 days' notice, neither stock nor debt of a street railway company can be increased without such notice, though its charter provides for meetings after notice of one

Digitized by Google

week, and the difficulties of the company require such increase.—Shepp v. Norristown Pass. Ry. Co. (Com. Pl.) 13 Pa. Co. Ct. R. 254, 2 Pa. Dist. R. 679.

[e] (Tenn. 1897) Corporations organized under Acts 1875, c. 142, were by such act empowered to increase their capital stock merely by a resolution of the board of directors, when they deemed it necessary. Section 19 of the act required corporations organized by the General Assembly, among other things, to prepare an amendment, and cause it to be probated and registered, before they could increase their capital stock. Acts 1883, c. 163, provided that corporations organized under Acts 1875, c. 142, desiring to increase their capital stock, must comply with the provisions of Acts 1875, c. 142, § 19. *Held*, that a failure by a corporation organized under Acts 1875, c. 142, to comply with Acts 1883, c. 163, in carrying out the provisions of Acts 1875, c. 142, § 19, made void an increase of stock by resolution of the board of directors made in 1890, irrespective of the question whether the act of 1883 repealed the provisions of the act of 1875 relative to the increase of stock.—Union Ry. Co. v. Sneed, 99 Tenn. 1, 41 S. W. 364, 47 S. W. 89.

[f] (Tex. 1897) Under Rev. St. 1879, art. 576, providing that any corporation may increase its capital stock to any amount "not exceeding double the amount of its authorized capital," etc., where a corporation increases its capital stock more than double its originally authorized capital, the increase is invalid, whether such increase is attempted to be made at one or more times.—Berg v. San Antonio St. Ry. Co., 17 Tex. Civ. App. 291, 42 S. W. 647, 43 S. W. 929.

IV. Filing Amended Articles or Certificate of Increase of Capital Stock with, and Issuance of Certificate of Compliance by, Secretary of State.

[a] (Conn. 1900) A corporation's failure to file a certificate of an increase of stock with the Secretary of State and the town clerk, as required by Gen. St. § 1954, does not invalidate a subscription to the increased stock as between the corporation and the stockholders; the object of the section being primarily for the benefit of the public.—Barrows v. Natchaug Silk Co., 72 Conn. 658, 45 Atl. 951.

[b] (Mich. 1896) An incorporated Chamber of Commerce may amend its articles of association, increasing its capital stock by filing the amended articles with the Secretary of State as provided for by How. Ann. St. § 4866.—Detroit Chamber of Commerce v. Secretary of State, 109 Mich. 691, 67 N. W. 897.

[c] (Mo. 1885) Rev. St. § 939, relating to the increase of their capital stock by corporations, requires, for the benefit of the public at large, a weekly newspaper notice. *Held*, that the certified copy of the statement of proceedings filed with the Secretary of State must show the publication of this notice, and that, if it does not, the Secretary's certificate of compliance with the law cannot issue.—State v. McGrath, 86 Mo. 239.

[d] (Mo. 1906) Where a corporation increased its capital stock in the manner prescribed by Rev. St. 1899, § 1332, as amended by Sess. Acts 1901, p. 92, and the statement required by section 1329 showed such fact as prescribed by section 1333 as amended by Sess. Acts 1901, p. 93, the Secretary of State was required to receive the statement and issue a certificate thereon, though he had filed a defective statement and had issued a certificate thereon, as under Sess. Acts 1903, p. 123, no lawful increase of stock could take effect until a certificate based on a proper statement was issued.—State ex rel. Ely & Walker Dry Goods Co. v. Swanger, 195 Mo. 539, 93 S. W. 932.

V. Extent of Compliance Required and Sufficiency of Compliance.

[a] (Ala. 1907) Gen. Acts 1903, p. 335, § 46, authorizing an increase of stock or bonded indebtedness of a corporation, provides for notice of a meeting for that purpose, that the notice shall state what increase is proposed, and that the corporation may increase its capital stock or bonded indebtedness in conformity with the consent voted at such meeting to an amount equal to or less, but not greater, than that stated in the notice. *Held*, that a single notice was sufficient for an increase of both the stock and bonded indebtedness of a cor-

Digitized by Google

poration to the amount stated in the notice.—Palliser v. Home Telephone Co., 44 South. 575.

[b] (La. 1893) Under Act 26 of 1882, providing that the capital stock can be increased only upon public notice for 30 days of a meeting of stockholders, a stockholders' meeting held according to the notice, a vote on the proposed increase, a certificate of proceedings, duly signed and verified, and the filing of the certificate in the office of the Secretary of State, "and when such certificate is so filed the capital stock of said corporation shall be increased as therein set forth," the increased stock can have no valid existence until the provisions of the statute have been fully complied with.—Lincoln v. New Orleans Exp. Co., 45 La. Ann. 729, 12 South. 937.

[c] (Mich. 1901) Comp. Laws, § 7038 (Pub. Acts 1885, No. 232, c. 188, § 2, subd. 4), provides that, when the capital stock of a corporation is increased or diminished, the president and a majority of the directors shall make a certificate thereof. Section 7053 (Pub. Acts 1885, No. 232, c. 188, § 17) declares that the articles of association may be amended, by a vote of two-thirds of the capital stock, in a manner not inconsistent with the provisions of the act, and that such amendment shall not become operative until a copy of the resolution, signed by the president and secretary, shall have been recorded. Section 7073 (Pub. Acts 1885, No. 232, c. 188, § 38) provides that, by a vote of three-fourths of its stock, such corporation may amend its articles so as to issue preferred and common stock in the same manner and with the same effect as is now provided by section 7053. *Held*, that sections 7053 and 7073 do not nullify the provision of section 7038 as to increasing capital stock, and that, on a corporation's so increasing the same and providing for the two kinds, the certificate must be signed by the president and a majority of the directors, to be entitled to record by the Secretary of State.—Continental Varnish & Paint Co. v. Secretary of State, 128 Mich. 621, 87 N. W. 901, 8 Detroit Leg. N. 795.

[d] (N. Y. 1880) Laws 1848, c. 40, relating to the formation of corporations for manufacturing purposes, provides (section 20) that any company formed under the act may increase or diminish its capital stock by complying with its provisions. Section 21 provides for a meeting of the stockholders for the purpose of availing themselves of the provisions of the act, and declares that, when a company desires to call a meeting of the stockholders for such purpose, it shall be the duty of the trustees to publish the notice, signed by at least a majority of them, in a newspaper in the county, at least three successive weeks, and to deposit a notice in the post office, addressed to each stockholder, and that a certificate of the meeting shall be "acknowledged" by the chairman. *Held*, that where a certificate of a meeting recited that it was "subscribed" and sworn to before a justice of the peace by the chairman, instead of being "acknowledged," it was sufficient.—Cuykendall v. Douglas, 19 Hun, 577.

[e] (N. Y. 1895) A certificate that the whole of the capital stock "has been sold, and all but $——— paid in," means that all the stock has been paid in, and hence complies with Laws 1848, c. 40, § 22, providing that, in proceedings to increase the capital of a corporation, a certificate shall be filed showing "the amount of capital actually paid in."—Moosbrugger v. Walsh, 89 Hun, 564, 35 N. Y. Supp. 550.

VI. Waiver of Compliance.

[a] (Mass. 1871) By Act Me. Feb. 17, 1871, a railroad corporation organized under the laws of that state, and also under the laws of Massachusetts, was authorized to extend its line, and increase its stock for that purpose. Acts Mass. 1871, c. 389, declares that, if any corporation operating a railroad in that state increases its stock without authority of the Massachusetts Legislature, the charter of such corporation should be subject to forfeiture and become null and void, but excepted the extension of the defendant road under the authority granted by the Maine statute from the operation of the act. The corporation proceeded to construct its road and increased its capital stock as authorized by the Maine statute, without obtaining authority therefor from the Massachusetts Legislature. *Held* that, though the exception contained in the act of 1871 did not authorize the extension and increase of capital, yet

Digitized by Google

such exception exempted defendants from the necessity of procuring authority from the state of Massachusetts before making such increase, and constituted a waiver by that state of the forfeiture incurred thereby.—Attorney General v. Boston & M. R. R., 109 Mass. 99.

[b] (N. Y. 1902) Under Stock Corporation Law, §§ 44, 45, providing that an increase in capital stock must be authorized by a vote of the stockholders owning at least a majority of the stock, at a meeting specially called for that purpose after due notice published, and mailed to each stockholder at least three weeks before the meeting at which the increase is voted, and section 38, providing that such notice and lapse of time may be dispensed with, and the action of the corporation authorized by the written consent of every member of the corporation, waiving such requirements, an additional stock issue is valid, though the requirements as to notice and lapse of time are not complied with, if a waiver of such requirements is authorized by every member in his certificate. Judgment (1901) 35 Misc. Rep. 659, 72 N. Y. Supp. 370, modified.—Hallett v. Metropolitan Messenger Co., 69 App. Div. 258, 32 Civ. Proc. R. 346, 74 N. Y. Supp. 639.

(162 Fed. 1.)

FRANK WATERHOUSE & CO., Inc., v. DODGE et al.

(Circuit Court of Appeals, Ninth Circuit. May 4, 1908.)

No. 1,490.

1. TRUSTS—BREACH OF TRUST—LIABILITY OF TRUSTEE.

Defendant contracted to sell a vessel to a steamship company, which being indebted to complainant, it was agreed that defendant should transfer the vessel to the steamship company, take a mortgage covering, first, the remainder of the purchase price, and, second, the indebtedness due complainant, evidenced by a note executed by the steamship company to defendant as trustee. The bill of sale of the vessel was never in fact delivered, nor was the mortgage executed. Thereafter defendant, without notifying complainant or giving him any opportunity to protect his interest, which he was able to do, executed mutual releases with the steamship company, and with K., the moneyed man of that concern, formed another corporation, to which the vessel was conveyed; the steamship company going out of business. Defendant received of the stock of the new company an amount equal to the amount remaining due on the vessel; K. receiving an amount equal to cash contributions which he made necessary to free the vessel from liens for indebtedness incurred by the steamship company. *Held*, that such transaction constituted a breach of trust on defendant's part, rendering it liable to complainant for the amount of its debt against the steamship company.

2. SAME—PARTIES.

The steamship company was not an indispensable party to a suit by complainant against defendant for breach of trust.

Appeal from the Circuit Court of the United States for the Northern Division of the Western District of Washington.

For opinion below, see 156 Fed. 57.

W. H. Bogle, Thomas B. Hardin, and Charles P. Spooner, for appellant.

George H. King (Theodore M. Taft and P. Tecumseh, of counsel), for appellees.

Before GILBERT, ROSS, and MORROW, Circuit Judges.

ROSS, Circuit Judge. The appellee Dodge filed in the court below a bill against the appellant and Frank Waterhouse individually, in effect charging the appellant with a breach of trust by reason of its al-

Digitized by Google

leged failure to apply the security with which the trustee was charged to the payment of a note for $10,000 given by the North Alaska Steamship Company to the appellant as trustee for the complainant, and praying, among other things, for a judgment for the amount due thereon. The court below held that there was no ground for recovery against Frank Waterhouse individually, and accordingly dismissed the bill as to him, with costs, but gave the complainant judgment for the money sought against the appellant, which is a corporation of the state of Washington; the complainant being a citizen of the state of New York.

The case shows that in January, 1904, Frank Waterhouse & Co., Incorporated, was the owner of the steamship Garonne, which was then out of commission in the waters of Puget Sound near Tacoma and in need of certain repairs. In the early part of the next month the North Alaska Steamship Company, a corporation of the state of New York, through one Ferguson, entered into negotiations with Frank Waterhouse & Co., Incorporated, for the purchase of the Garonne, which negotiations resulted in a contract by which Frank Waterhouse & Co., Incorporated, agreed to sell the vessel to the North Alaska Steamship Company for $85,000; $1,000 to be paid in cash, $14,000 to be paid February 15, 1904, and the balance in deferred payments extending over a period of two years, which deferred payments were to be secured by a first mortgage on the vessel, an assignment of the marine insurance thereon, a bond to protect the seller against any indebtedness that might be contracted by the purchaser on the credit of the vessel, and other securities satisfactory to the seller. At that time it was contemplated that the purchaser would accept title to the steamer on February 15th, when the $14,000 was to be paid, and would at that time furnish the securities called for by the contract; but on February 5, 1904, Ferguson wrote from New York to Waterhouse at Seattle, among other things, as follows:

"Your various communications, including confirmation of the sale of the steamer Garonne, duly received, and we have confirmed a compliance with the terms by telegraph. We have written our Mr. Hastings to make a thorough inspection of the steamer and wire us the results of the said inspection. I expect to be in Seattle myself in time to go over the ship and follow the lines of inspection; but it is just possible that I may not arrive there in time, and may be detained here a week or 10 days longer than I anticipate. In regard to the second payment on the Garonne, we will follow this mode, which we trust will be satisfactory: On or before February 15th we will deposit in the Chase National Bank of New York $14.000, and the bank will wire the Washington National Bank of Seattle to pay your draft for this $14,000 on account of the purchase price of the steamer Garonne. We will also notify you at the same time that we have paid money in to your credit, and a receipt given by you to our Mr. Hastings will cover the ground. As soon as I arrive in Seattle we will finish up the matter as to details as per arrangement, so as to make the transfer of the vessel on the next payment of $10,000."

On the 10th of February, 1904, Waterhouse telegraphed Ferguson at New York as follows:

"Received your letter 5th. A vital condition of sale Garonne to you was that purchase should be entirely completed by February 15th by exchange of steamer for fifteen thousand cash, notes, mortgage bond and other satisfactory col-

Digitized by Google

lateral. Am willing accept fourteen thousand next Monday provided you agree execute notes, mortgage bond and deliver securities by March 1st, or forfeit the fifteen thousand if you fail; but I want you to advise by wire what character of collateral to deferred payments you will furnish in addition to mortgage and bond, so I may pass upon same Monday. I guarantee Garonne good insurable risk, and will pass United States inspection for commission, by expenditure on your part of about seventy-five hundred dollars. Am now doing considerable work on her my own expense, preparatory to inspection. Other parties anxious to purchase her next Monday at same price for practically cash."

The next day, February 11, 1904, Ferguson wired Waterhouse at Seattle as follows:

"Understand Garonne transfer on payment twenty-five thousand my principal understands same and has gone South cannot reach Seattle until March 10th or 12th. We propose pay fourteen thousand February 15th, ten thousand March 15th make then notes for balance mortgage insurance policy good security bonds or cash I may not reach Seattle until March 5th will pay shipkeeper until transfer."

February 15, 1904, C. B. Smith, president of the North Alaska Steamship Company, for whom Ferguson had been acting, paid the appellant, Frank Waterhouse & Co., Incorporated, $14,000, receiving from that company the following:

"Received, Seattle, February 15, 1904, of C. B. Smith, fourteen thousand dollars, being payment due this day on contract for purchase of steamship Garonne. Another payment of $10,000 and the execution of notes, mortgage, bond, and collateral for deferred payments are to be made and completed on or before March 15, 1904, as per terms of contract; and if default is made by said Smith in making said further payment or in execution of said securities on or before March 15th next, then his right to purchase said vessel shall cease, and all moneys paid by him toward such purchase shall be forfeited to and be and remain the moneys of this company.

"Frank Waterhouse & Co., Inc.,
"By Frank Waterhouse, President."

On March 15, 1904, the purchaser remitted to the appellant from New York $7,000, and on March 18th $3,000, making the $10,000 due March 15th, but did not furnish the bond and other securities called for by the contract, or take title to the steamship. The record shows that from that time forward the seller was constantly insisting that the purchaser should complete the contract and take the title, and that the purchaser was continually promising to do so, and that subsequent to March 15th the appellant permitted the purchaser to take possession of the vessel for the purpose of making certain repairs which it desired to make in preparation for the approaching Alaska season, in which trade the steamship was to be engaged. This arrangement, however, was upon the distinct agreement that no indebtedness should be incurred against the vessel, and that all of the repairs, betterments, and supplies should be paid for in cash by the purchaser and the steamship kept free from all incumbrance. Ferguson and one Hastings were the representatives at the time of the North Alaska Steamship Company, and it soon appeared that they were making the repairs and procuring supplies on the credit of the vessel. The appellant thereupon insisted that such indebtedness should be promptly paid by the purchaser, and threatened to cancel the contract and forfeit the payments theretofore

Digitized by Google

made by the purchasing company unless those debts were paid and the securities called for by the contract furnished. The North Alaska Steamship Company made various payments upon the purchase price of the Garonne and upon the indebtedness so incurred in making the repairs and procuring the supplies, and made various promises of complete performance of the terms of the agreement, and engaged a full cargo of freight and passengers for the voyage of the ship, to commence from Seattle about the 1st day of June. In the latter part of May, 1904, the appellant notified the North Alaska Steamship Company that unless all of the debts incurred against the ship by its representatives, Ferguson and Hastings, were promptly paid and the terms of the contract of purchase complied with, it would not permit the vessel to sail in charge of the North Alaska Steamship Company and would cancel the contract to purchase. About the 1st of June, 1904, the president of the North Alaska Steamship Company, C. B. Smith, came to Seattle, as did Frank S. Pusey, as the representative of the appellee Dodge. Pusey stated, what appears to have been the fact, that the North Alaska Steamship Company was indebted to Dodge in the sum of $10,000, which it had borrowed from him and paid to the appellant, which indebtedness Pusey came to enforce or have secured for Dodge. At that time the balance of the purchase price of the steamer remaining unpaid to Waterhouse & Co. was $37,671.46, or thereabouts, and the amount due from the North Alaska Steamship Company to Dodge was about $10,000. To arrange for the payment of that indebtedness and the security of the interested parties and for the sailing of the ship to Nome with the passengers and freight it had secured, Pusey and the Waterhouse Company then entered into this written agreement:

"Memorandum between Frank S. Pusey, agent for G. M. Dodge, of New York, and Frank Waterhouse & Co., Inc., of Seattle, Washington: The North Alaska Steamship Company is indebted to said Waterhouse & Co., Inc., in the sum of about $37,671.46, being balance due on purchase price of the steamship Garonne, and are also indebted to said G. M. Dodge in the sum of about ten thousand dollars for borrowed money. It is agreed that said Waterhouse & Co., Inc., shall take a mortgage from said North Alaska Steamship Co. upon the steamship Garonne to secure both claims above mentioned. The claim of said Waterhouse & Co., Inc., shall be prior and paramount under such mortgage, and the claim of said Dodge shall be secondary. Said Waterhouse & Co., Inc., shall take a note from said North Alaska Steamship Co., payable to them as trustee, for the amount so owing to said Dodge, said note to be payable in two months from date. It is agreed that said Waterhouse & Co., Inc., in acting as such trustee for said Dodge in the securing of said indebtedness, assumes no liability whatever with reference thereto, except that it agrees to act in good faith.

"Frank S. Pusey,
"Agent for G. M. Dodge.
"Frank Waterhouse & Co., Inc.,
"By Frank Waterhouse, President."

In pursuance of that agreement the contemplated mortgage was prepared and signed by Smith as president of the North Alaska Steamship Company, and Smith also gave to the Waterhouse Company, as trustee for Dodge, an assignment of freight moneys to be earned by the steamer on her contemplated trip to Alaska, although it does not

Digitized by Google

appear that any money was ever received on that account. A bill of sale of the steamship Garonne, together with the mortgage, was then forwarded by the Waterhouse Company to the Chase National Bank of New York, with instructions to that bank to deliver the bill of sale to the North Alaska Steamship Company upon the completion of the execution of the mortgage, which was never done, and the bill of sale was consequently never delivered. The North Alaska Steamship Company, however, sailed the ship to Nome, leaving Seattle June 2, 1904, during which time the Waterhouse Company acted as agent for the ship, receiving commissions on both receipts and disbursements. After entering into the agreement above set out Pusey returned East, and neither he nor Dodge heard anything further from the Waterhouse Company until about August 25, 1904, when Pusey received a letter from Waterhouse, dated August 2, 1904, which, by reason of misdirection, was returned to Seattle and was remailed August 19, 1904. That letter is as follows:

"Seattle, Aug. 2, 1904.

"F. S. Pusey, Esq., 101 Broadway, New York—Dear Sir: I duly received your telegram of the 15th ult., reading as follows: 'Have you advised of collection of trustee freight money? Just returned yesterday. Please wire present status of our joint claims. [Signed] Frank S. Pusey.' This was not replied to, for the sole reason that I was not in possession of your address, and had no means of knowing where a telegram would reach you, and it was only through your letter of July 27th, which reached me yesterday, that I learned of your address. I must confess to a feeling of surprise and annoyance at the tone of your above-mentioned letter, for the reason that it was specifically understood and put in writing that I was to be in no way personally responsible to you for the collection of your debt against the North Alaska Steamship Company. I agreed to act in the capacity of trustee solely as a matter of accommodation to you, and in that capacity to receive and remit to you the money which the officers of the North Alaska Steamship Company promised to remit to you from Cape Nome and to pay to you out of the revenues of their company thereafter. This was the only duty that I undertook in my capacity as trustee. The money has not been remitted to me from Cape Nome. Therefore I have had no opportunity to receive it or forward it to you. The North Alaska Steamship Company became defunct and has retired from business. In the settlement of my own affairs with the company, I was obliged to take back the steamship Garonne and assume an indebtedness which the North Alaska Steamship Company had loaded her with, amounting to almost $35,000. I took the steamer back and assumed the indebtedness, and subsequently sold her to another corporation. I have no opportunity for protecting your claim. When I was in New York, I was informed that both yourself and Gen. Dodge were out of the city. An effort to get into communication with you was made several times while I was there. I have no idea what disposition was made of the funds that were to be collected by Mr. Smith at Cape Nome, as I have received no advice from either him or from Capt. Ferguson regarding the same. The settlement I was obliged to make with the North Alaska Steamship Company was very unsatisfactory to me. I inclose herewith notes and other papers, which I have been holding in this connection for you. I regret very much that I have been unable to collect this money for you, but the circumstances have been as above. Kindly acknowledge receipt of enclosures.

"Very truly yours, [Signed] Frank Waterhouse."

And this is the way, according to the record, that Waterhouse "settled his own affairs with the company" and left his cestui que trust without protection. It appears that about the middle of June some of the parties interested in the North Alaska Steamship Company, hav-

Digitized by Google

ing become dissatisfied with the amount of Ferguson's expenditures at Seattle, sent one Mead to that city to look into the affairs. Mead found upon investigation that the expenditures and debts so incurred by Ferguson amounted to $30,000 or thereabouts, and, as a large part of them constituted liens upon the ship, Waterhouse, who still held the title thereto, was very naturally insistent upon their being paid. Accordingly he, with his attorney, went with Mead on his return to New York, and there in the early part of July had a number of meetings with the persons interested in the North Alaska Steamship Company and their attorneys, of none of which meetings was Dodge in any way notified. The only evidence we find in the record upon that subject is the following from the testimony of Waterhouse:

"Q. Was Gen. Dodge present at any of those meetings? A. No, sir. Q. What efforts, if any, were made to communicate with Gen. Dodge or securing his presence? A. Mr. Corwine—

"Mr. King: We want the witness' testimony limited to his own knowledge.

"A. (continuing). Mr. Corwine endeavored to get in communication with him, and reported at one of the meetings that Gen. Dodge was out of town and he had been unable to learn of his address."

At those meetings Waterhouse was insistent upon the payment of the indebtedness incurred by Ferguson and upon the balance due himself, amounting in all to about $67,000; but it does not appear that he made any allusion to the $10,000 due Dodge. While the North Alaska Steamship Company undoubtedly treated the Waterhouse Company badly in failing to perform its agreement, that fact afforded no just ground for the disposition the appellant then and there made of the trust property, which the record shows to have been this: The North Alaska Steamship Company failing to make the payments insisted upon by the Waterhouse Company, those two companies agreed to exchange general releases, which they thereupon did, and Waterhouse and F. W. King, who seems to have been the moneyed man of the North Alaska Steamship Company, at the same time entered into an agreement to organize a corporation styled the Merchants' & Miners' Steamship Company, with a capital stock of $67,000, to which the Waterhouse Company should convey the steamship Garonne, in consideration of which conveyance the Merchants' & Miners' Steamship Company should issue to the Waterhouse Company its stock to the amount of $37,000, which amount was practically the unpaid balance of the purchase price the North Alaska Steamship Company had originally agreed to pay for the Garonne, and the remaining $30,000 of stock of the Merchants' & Miners' Steamship Company was to be issued to King in consideration of that much cash that he agreed to advance with which to pay and discharge the indebtedness incurred by Ferguson at Seattle. That arrangement, the record shows, was carried into effect. The upshot of it all was that the Waterhouse Company got all but $37,000 of the $85,000 the North Alaska Steamship Company had agreed to pay it for the steamship Garonne, and for the remaining $37,000 of the purchase money he got $37,000 of the $67,000 of the stock of the Merchants' & Miners' Steamship Company, with that company holding the Garonne freed of all the liens that Ferguson had created against it, by the $30,000 advanced by King for the $30,000

Digitized by Google

of stock of the Merchants' & Miners' Steamship Company that he received.

We are of the opinion that the court below was right in holding that such disposition of the trust property by the appellant, in utter disregard of the interest of the cestui que trust and without notice to him, entitled the appellee Dodge in equity and good conscience to judgment against the appellant for the amount due upon the $10,000 note mentioned in the trust agreement. The evidence is uncontradicted that Gen. Dodge was financially able to have protected his interest, and would have done so, had he been advised of the transactions in question. It is idle to contend that Waterhouse could not have notified him of the proceedings because he did not know where to find him. The record shows that the appellee Dodge then, and for about 18 years had, maintained offices at No. 1 Broadway, New York, where he was almost daily during the negotiations in question, and with which he was in constant telephone communication; that his business and house address appeared in a standard directory of the city; that he was a man of prominence in New York, and, indeed, throughout the country; was personally known to many of the persons attending the meetings in question; and that Waterhouse was personally told of the appellee's New York address by Pusey while in Seattle in the early part of 1904, when the latter was asked by Waterhouse whether Gen. Dodge would not join him in purchasing two steamships in the East and putting them into the traffic between Seattle and Alaska.

We also agree with the court below that the real controversy in this case is between the appellant and the appellee Dodge, and that the North Alaska Steamship Company is not an indispensable party.

The judgment is affirmed.

(162 Fed. 7.)

WATSON et al. v. NATIONAL LIFE & TRUST CO. et al.*

(Circuit Court of Appeals, Eighth Circuit. May 7, 1908.)

No. 2,691.

1. EQUITY—PLEADING—MULTIFARIOUSNESS OF BILL.

The joining of several complainants in a bill in equity, the purpose of which is to secure an accounting of a trust fund in which all of the complainants claim an interest, with others, although their interests are several, does not render such bill multifarious.

[Ed. Note.—For cases in point, see Cent. Dig. vol. 19, Equity, § 368.]

2. SAME—PARTIES—ONE OR MORE SUING IN BEHALF OF ALL.

Where a large number of persons are separately, but similarly, interested in a trust fund, a bill in equity for an accounting with respect to such fund and for direction as to its administration may be maintained by a part of such body in behalf of all.

[Ed. Note.—For cases in point, see Cent. Dig. vol. 19, Equity, § 257.]

3. SAME—GROUNDS OF JURISDICTION—ENFORCEMENT OF TRUST.

An insurance corporation issued a large number of policies, by which in consideration of the payment of premiums during a fixed term it contracted to pay a certain sum to each policy holder at the end of such term, together with an equitable portion of a profit fund to be made up from gains and profits from lapses and other sources. While such policies

*Rehearing denied Sept. 14, 1908.

Digitized by Google

were outstanding the company transferred its assets to another company, disenabling itself from performing its contracts, and went out of business. Its successor, after issuing similar policies, transferred its assets to a third, and the third to a fourth, company. *Held*, that holders of policies in the transferring companies were entitled to join in a bill in equity for some form of relief with respect to the assets transferred as a trust fund, and where the bill contained allegations tending to negative any novation to join all of the companies as defendants.

4. TRUSTS—SUIT TO ENFORCE—CONDITIONS PRECEDENT.

Such bill being for the enforcement of a trust, and not a creditors' bill, it was not essential that the claims of complainants should first be reduced to judgment against the companies issuing the policies.

5. SAME—PARTIES.

Where one part of the relief prayed for related to funds deposited by some of the companies with a State Auditor, in such aspect of the bill the Auditor was an indispensable party; but his absence would not prevent the granting of relief to which complainants might be entitled with respect to the fund in the hands of defendants, nor render the bill subject to demurrer.

Appeal from the Circuit Court of the United States for the Southern District of Iowa.

J. M. Parsons (William H. Atwood, on the brief), for appellants.

L. A. Stebbins (Dudley & Coffin, on the brief), for appellees.

Before SANBORN and ADAMS, Circuit Judges, and PHILIPS, District Judge.

ADAMS, Circuit Judge. This was a bill in equity, brought by complainants Watson and Olson, for themselves and others similarly situated, against the National Life & Trust Company, an Iowa corporation, hereinafter called "Trust Company," the Security Life & Savings Insurance Company, an Iowa corporation, hereinafter called "Security Company," the National Life Insurance Company of the United States of America, incorporated by an act of Congress, hereinafter called "Federal Company," and the National Life Insurance Company of the United States of America, an Illinois corporation, hereinafter called the "Illinois Company," for equitable relief to which complainants deemed themselves entitled by reason of breach of contracts of insurance originally made by them with the Trust Company and Security Company. After demurrer had been filed to the amended bill, George Rodecker, Frank R. Conklin, Amelia M. Conklin, Dennis E. Sullivan, and Russell T. Barr claiming to be situated similarly to complainants, Watson and Olson, filed their bill of intervention, to which also a demurrer was interposed. Both demurrers were sustained by the court below, and the bills were dismissed for want of equity. Complainants and interveners both appeal.

The bill sets up the following facts: That the Security Company in March, 1902, executed and delivered to complainant Olson a 10-year term policy whereby, in consideration of the immediate payment of $30 and of $15 semiannually thereafter during the term of 10 years, it agreed to pay him at the end of the term the sum of $300, and "in addition thereto the equitable share then apportioned from the savings fund and credited to his policy," in excess of the $300 guaranteed; that many other similar contracts were then and thereafter executed

Digitized by Google

and delivered by the Security Company to other persons; that after Olson had paid two premiums, and had otherwise performed all the conditions of the contract required of him, the Security Company on or about November 1, 1902, unlawfully sold and delivered all its assets and accumulations to the Trust Company, renounced its obligations, distributed its capital among its stockholders, and disempowered itself to further perform any of its contracts; that the Trust Company in October, 1902, executed and delivered to complainant Watson a policy whereby, in consideration of the payment of $30, quarter-annually during the running of the policy, it agreed to pay him at the end of the term of 10 years the sum of $1,200, and "in addition thereto the accumulated profits then apportioned"; that after Watson had paid several premiums, amounting in the aggregate to $397.80, and had otherwise fully performed all the conditions required of him by the contract, the Trust Company in May, 1903, after it had issued many other similar policies to others, unlawfully abandoned its business, sold and transferred all its assets and accumulations to the Federal Company, renounced its obligations, and disempowered itself to perform its contracts; that the Federal Company in March, 1904, unlawfully sold and transferred all its assets including the assets originally belonging to the Security Company and Trust Company, which had been transferred to it, to the Illinois Company; that the Illinois Company admits that it has in its possession "accumulated profits" arising out of the business initiated by the Security and Trust Companies, and in which the holders of policies originally taken out in either of those companies are entitled to participate, the sum of about $184,000.00; that the Trust Company by the law of Iowa and its contract obligations with its policy holders was required to create a reserve fund sufficient to make good the face of the policy as guaranteed and a profit fund for the benefit of persistent policy holders, including the benefits derivable from lapses from the reserve fund and interest earned on the reserve fund which are alleged to constitute items of the profit fund and to deposit the same with the Auditor of the state of Iowa; that no part of the profit fund, as distinguished from the reserve necessary to pay the face of the policies, has ever been deposited with the Auditor of the state; that on November 2, 1902, the Trust Company merged its legal reserve in the hands of the Auditor of the state with the legal reserve of the Security Company, thereby rendering them indistinguishable and constituting a violation of the provisions of the statutes of Iowa in that regard.

By way of anticipating an expected plea of novation, the complainants, in effect conceding that they have performed their part of the contracts of insurance with the successive transferees of their original companies, aver in their bill that the Federal Company improperly withheld from complainants and others similarly situated information of its want of power to do business, its inability to conform to the requirements of the law, and other facts material for them to know, and that by reason of the similarity of the corporate name of the Federal Company and the Illinois Company and certain fraudulent representations made by the Illinois Company the policy holders were deceived into paying premiums as done by them. Complainants claim that they and others similarly situated to them are entitled to an accounting of

Digitized by Google

the profit fund belonging to the policy holders of the Security Company and Trust Company admitted to be held by the Illinois Company and to a determination of the exact amount thereof and of the amount due to them and others who might join with them, respectively. They claim that the profit fund should also be deposited and maintained with the Auditor of the state of Iowa. The prayers of the bill, among them being one for general relief, are sufficient to cover any relief warranted by the facts as pleaded.

The bill of intervention filed by Rodecker and others charges that the five interveners were insured by the Trust Company in amounts ranging from $3,000 to $1,500 each, by policies similar in all respects to that issued to Watson as disclosed in the bill. They adopt the allegations of the bill relating to the transfer of assets, renunciation of contracts, and commingling of reserve funds as constituting breaches of their contracts. They claim that they are entitled to recover as damages on account of such breaches all moneys paid by them as premiums, with 6 per cent. interest thereon, and also their respective shares in the profit fund properly apportionable to their policies. They admit, in effect, that they have paid the premiums due upon their respective policies to the Illinois Company since the transfer of the assets by the Federal Company to it, but adopt the averments of the bill anticipating and avoiding the plea of novation. They pray for particular and general relief. As the intervening bill adopts averments of the original bill, and adds nothing except what was necessary to connect the interveners with the subject of litigation, we may properly follow the suggestion of defendants' counsel and treat the two as one bill for the purposes of this opinion.

One of the grounds of the demurrer filed below was that the bill is multifarious, and this is urged upon us as a justification of the decree below. By multifariousness in a bill, as defined by Story, Eq. Pl. § 271, is meant:

> "The improperly joining in one bill distinct and independent matters, and thereby confounding them; as, for example, the uniting in one bill of several matters, perfectly distinct and unconnected, against one defendant, or the demand of several matters of distinct and independent nature against several defendants in the same bill."

This court, in Kelley v. Boettcher, 29 C. C. A. 14, 85 Fed. 55, 64, observed on the subject of multifariousness that:

> "There is no fatal misjoinder of causes of action in equity in any bill which presents a common point of litigation, the decision of which will affect the whole subject-matter and will settle the rights of all the parties to the suit."

See, to the same effect, New Hampshire Sav. Bank v. Richey, 58 C. C. A. 294, 121 Fed. 956; Jones v. Missouri-Edison Electric Co., 75 C. C. A. 631, 144 Fed. 765, 780; Rogers v. Penobscot Mining Co., 83 C. C. A. 380, 154 Fed. 606.

In Brown v. Guarantee Trust Co., 128 U. S. 403, 412, 9 Sup. Ct. 127, 130, 32 L. Ed. 468, the Supreme Court, speaking on the same subject, said:

> "It is not indispensable that all the parties should have an interest in all the matters contained in the suit. It will be sufficient if each party has an in-

Digitized by Google

terest in some material matters in the suit, and they are connected with the others."

Counsel for defendants make an interesting argument to show that the rights of the complainants, including the interveners, are separate and distinct. They contend that Olson's claim is against all the defendants, the Security Company, the Trust Company, the Federal Company, and the Illinois Company; that Watson's claim is against the Trust Company, the Federal Company, and the Illinois Company only; and that the interveners' claims are against the Illinois Company only. Whether this is a correct statement of the rights of the complainants or the liability of the respective defendants at law is unnecessary to be determined. That depends upon whether there was a novation by the parties, and possibly upon other facts not now before us; but in any event the argument has no application here. This is a bill in equity to secure an accounting of a trust fund in which all the complainants claim to be interested. They claim that they and many others similarly situated have a right at least in the profit fund originating in their contracts with the Security Company and the Trust Company and wrongfully transferred by them to the Illinois Company, which, it is averred, holds it and admits that it is for the benefit of themselves and others similarly situated. It is this fund which affords the point of litigation common to all the complainants. How much it is on a fair accounting, and whether it is to be deposited with the Auditor of the state, or how it should otherwise be made to respond to complainants' demands, afford the chief subject-matter of the bill, and can and should be most conveniently litigated at the suit of all persons entitled to it, either by name or by proper representation. No other course would be fair or equitable to the Illinois Company, the present holder of the fund, or afford an adequate remedy to the numerous parties entitled to participate in it. The bill in our opinion is not multifarious.

It is next contended that this is not a case where the unnamed similarly situated persons can appear or become proper parties by representation. There can be no doubt that the complainants who appear by name and set forth their grounds for relief are proper parties, and whether the unnamed persons similarly situated are made so or not does not necessarily arise on the demurrer, which is alone before us for consideration. There, however, can be no doubt that in a case of this kind, where the parties interested are numerous, running, according to the averments of the bill, into thousands, they may, and properly should, be represented by a portion of their number. The general rule is that all parties interested in a trust fund are ordinarily required to be brought before the court which is administering it. But Story, Eq. Pl. (10th Ed.) § 95, recognizes an exception to this rule founded, as he says, "on the mere fact of numerousness when it may amount to a great practical inconvenience or positive obstruction of justice." He there specifies the exceptions to the rule, among which he mentions cases "where the parties are very numerous, and although they have or may have separate and distinct interests, yet it is impracticable to bring them all before the court." The Supreme Court of the United

Digitized by Google

States, in Smith v. Swormstedt, 16 How. 288, 302, et seq., 14 L. Ed. 942, recognizes the same rule and exceptions. Mr. Justice Nelson, speaking for the court, said:

"The rule is well settled that where the parties interested are numerous, and the suit is for an object common to them all, some of the body may maintain a bill on behalf of themselves and of others. * * * Where the parties interested in the suit are numerous, their rights and liabilities are so subject to change and fluctuation by death or otherwise that it would not be possible, without very great inconvenience, to make all of them parties, and would oftentimes prevent the prosecution of the suit to a hearing. For convenience, therefore, and to prevent a failure of justice, a court of equity permits a portion of the parties in interest to represent the entire body, and the decree binds all of them the same as if all were before the court. The legal and equitable rights and liabilities of all being before the court by representation, and especially where the subject-matter of the suit is common to all, there can be very little danger but that the interest of all will be properly protected and maintained."

The same doctrine is approved in United States v. Old Settlers, 148 U. S. 427, 480, 13 Sup. Ct. 650, 37 L. Ed. 509; Williams v. Bankhead, 19 Wall. 563, 571, 22 L. Ed. 184.

It is further contended that there is no equity in the bill. Bearing in mind the charges made, which for the purposes of the demurrer must be taken to be true, we have a case in which the defendants Security Company and Trust Company, for a consideration fixed and performed in part by the complainants, had agreed in their policies to pay each of the complainants a certain sum of money at a fixed period, and in addition thereto to pay them a certain portion of a fund, called a "profit fund," to be made up of gains and income of one kind or another to be made during the term of their respective policies. This was an indeterminate amount, but one which the companies agreed should be determined and apportioned at the maturity of the policies. The Security Company and Trust Company, according to the averments of the bill, committed a flagrant breach of their contracts, transferred their assets to another, disempowered themselves to perform any part of their obligations, and went out of business. Complainants had paid money to the companies on the faith of their agreements, and must have some remedy, legal or equitable, for their breach. What it shall be, whether one or more of those prayed for in the bill, is not material at the present time, provided only the facts disclosed warrant some kind of equitable relief which comes within the prayer for general relief.

In the case of Lovell v. St. Louis Mutual Life Ins. Co. and St. Louis Life Insurance Co., 111 U. S. 264, 4 Sup. Ct. 390, 28 L. Ed. 423, facts were involved in many respects like those here involved. A policy holder in the St. Louis Mutual Life Insurance Company, which afterwards sold and transferred its entire assets to the St. Louis Life Insurance Company, sued both companies in equity for relief. He prayed for the return of the money actually paid by him as premiums, with interest, and also for general relief. Mr. Justice Bradley delivered the opinion of the court, and in answer to the question propounded, whether plaintiff had any right of action against both companies, said:

"It seems to us that the mere statement of the case is enough to show the want of equity in the transaction on the part of the companies, and the right

Digitized by Google

of the complainants to some relief at the hands of the court. * * * As the old company totally abandoned the performance of its contract with the complainant by transferring all its assets and obligations to the new company, and as the contract was executory in its nature, the complainant had a right to consider it as determined by the act of the company and to demand what was justly due in that exigency."

See, to the same effect, Roehm v. Horst, 178 U. S. 1, 14, 20 Sup. Ct. 780, 44 L. Ed. 953.

An action at law by complainants against the Security and Trust Companies only would have afforded them no relief. Those companies had transferred all their assets to the reinsuring company, and such action would have been an idle and futile ceremony. Fortunately for them, their contracts gave them an interest in the fund to be gathered during the terms of their policies, and this fund, according to the averments of the bill, was transferred to the reinsuring companies, and is now recognized by them as a fund in which complainants have an interest.

In the absence of a novation—that is, the giving to the complainants and acceptance by them of the obligation of the Illinois Company in lieu of that of the Security and Trust Companies, which we will presently take up for consideration—complainants could not reach the fund in which they were concededly interested in an action at law. Unless there was a novation, there was no privity between them and the reinsuring companies, involving either an obligation on their part to pay premiums or on the part of the reinsuring company to pay losses. Lovell v. St. Louis Mutual Life Ins. Co., supra; Knapp v. Connecticut Mut. Life Ins. Co., 29 C. C. A. 171, 85 Fed. 329, 40 L. R. A. 861; Price v. St. Louis Mutual Life Ins. Co., 3 Mo. App. 262. Their rights to and interest in the profit fund will be lost to them unless equity affords a remedy.

Assuming the averments of the bill to be true, whatever other remedies complainants may have, there can be no doubt that they have an equitable right to an accounting concerning that fund. If they have not by novation accepted the obligation of the Illinois Company in lieu of that of the companies with which they originally contracted, they have according to the averments of the bill some interest in that fund, and the Illinois Company holds it in trust for them and others similarly situated, and ought to be held to an accounting concerning it, irrespective of any want of abuse of trust or other considerations. Daniell's Ch. Pl. & Pr. (5th Ed.) 1770.

If the facts are as just stated, there was no necessity for reducing complainants' claims to judgment before instituting this proceeding, as urged by defendants' learned counsel. They are not seeking relief on the theory of a creditors' bill. They deny that relationship to the Illinois Company, which holds the fund in question, and proceed exclusively on the theory that that company is in possession of a trust fund in which they are interested. In such case no preliminary reduction of claims to a judgment is required. Equitable jurisdiction is found under the general heading of "Trusts."

It is argued by defendants' counsel that the bill discloses a novation so far, at least, as the interveners are concerned; but after a careful

Digitized by Google

consideration of the allegations of the intervening bill, and those of the amended bill adopted by it, we are unable to agree with them in this particular. Language is indeed employed which by fair import leads us to believe that all the complainants and interveners formally, at least, accepted provisions made for and tendered to them in the several reinsuring contracts. But in view of the averments of the bill, anticipating and avoiding an expected plea of novation, we are unable on this demurrer to give force or effect to the import of the language in question. This is a proceeding in equity, where general relief is prayed for, and where the averments of the bill are admitted to be true. Accordingly, if an apparent novation occurred, but was brought about by fraud legally sufficient to avoid it, we cannot say that complainants, upon establishing such facts, would not be entitled to some relief. The proof upon final hearing must develop this phase of the case.

It is contended that the Auditor of the state of Iowa is an indispensable party to this suit, and that his absence renders any relief impossible. Undoubtedly he is a necessary and indispensable party to any relief complainants might be entitled to by reason of his alleged possession of the reserve funds of the Trust Company and Security Company, or by reason of the alleged improper intermingling of such funds by him. If the only relief to which complainants are entitled depends upon allegations of the kind just suggested, the Auditor should be here. His rights would be necessarily involved and materially affected. Shields v. Barrow, 17 How. 130, 139, 15 L. Ed. 158; Sioux City Terminal Co. v. Trust Co., 27 C. C. A. 73, 82 Fed. 124; McConnell v. Dennis, 82 C. C. A. 501, 153 Fed. 547; Rogers v. Penobscot Mining Co., supra.

But, if the averments of the bill entitle complainants to any relief in the absence of the Auditor, they are maintainable notwithstanding his absence. Cases supra. It is our opinion that complainants, if their rights were cut off by the reinsuring contracts, as charged, and if they were not affected by the consequences of any valid novation, as charged, are entitled to some relief, without consideration of the legal reserve or the Auditor's relation to or conduct in respect of it. They would seem to be entitled to their share in the "profit fund," which, according to the charges of complainants, has never been turned over to the Auditor, but is now held exclusively by the Illinois Company, and probably, under the doctrine of the Lovell Case, supra, to other damages occasioned by the breach of their contracts, such as restoration of premiums paid by them and interest thereon, and possibly to other relief, dependent upon the facts of the case as they may materialize on final hearing. We do not, however, wish to be understood as expressing any opinion upon the character of relief to which complainants may ultimately be entitled. For the purposes of this case it is sufficient that some relief is available to them without the intervention of the State Auditor. It results that the learned trial court erred in sustaining the demurrers and dismissing the bill.

The decree is reversed, and the cause remanded, with instructions to take such action not inconsistent with this opinion as the case may require.

Digitized by Google

(161 Fed. 915.)

WEISSENTHANNER v. DODGE METALLIC CAP CO.

(Circuit Court of Appeals, Third Circuit. May 4, 1908.)

No. 12.

PATENTS—INVENTION—BOTTLE STOPPER.

The Weissenthanner patent, No. 801,281, for a sheet-metal closure for bottles, etc., is void for lack of invention.

Appeal from the Circuit Court of the United States for the District of New Jersey.

Charles L. Jones, for appellant.
Herbert Howson, for appellee.

Before DALLAS, GRAY, and BUFFINGTON, Circuit Judges.

BUFFINGTON, Circuit Judge. The court below held invalid patent No. 801,281, granted October 10, 1905, to Alfred L. Weissenthanner for a sheet-metal closure for bottles, etc. It committed no error in so holding. In view of the description of the device and the full discussion of the patent in the opinion of the court below, reported in 156 Fed. 365, we confine ourselves to narrow limits.

The device was one to rupture the metal cap of a bottle. It consisted of extending the metal at one side of the cap into a downwardly projected tongue, and near the head of the tongue piercing the cap by two inverted shaped slits. The result was, when the tongue was pulled upwards, the cap was easily ruptured and removed. But patent No. 708,528, to Calleson, showed the use of a downwardly projecting tongue and at its head two circular-shaped, diverging slits to facilitate rupture. Assuming the change from Calleson's circular slits to the present patentee's right-angled ones was an improvement, yet it was one of such mere mechanical character as to involve nothing inventive. In our judgment the grant of a patent upon such a device and the allowance of 22 claims thereon involves a misunderstanding of the function of a patent, for "to grant to a single party a monopoly of every slight advance made, except when the exercise of invention somewhat above ordinary mechanical or engineering skill is distinctly shown, is unjust in principle and injurious in consequences." Unless the Patent Office itself is satisfied of the patent's validity, the public should not be burdened with a monopoly, with the expectation that the courts will invalidate it.

The judgment of the court below is affirmed.

Digitized by Google

(161 Fed. 309.)

RONEY v. CHASE, TALBOT & CO.

(Circuit Court of Appeals, Second Circuit. April 14, 1908.)

No. 229.

SHIPPING—DEMURRAGE—LIABILITY OF SHIPPER.

Where a contract of affreightment required a vessel only to deliver the cargo at the port of New York, although it contained no specific provision for demurrage, she is entitled to recover damages in the nature of demurrage for delay resulting from her being ordered by the cargo owner to discharge at a berth, which she could not then reach, because of dredging work being done by the government.

[Ed. Note.—For cases in point, see Cent. Dig. vol. 44, Shipping, § 576. Demurrage, see notes to Harrison v. Smith, 14 C. C. A. 657; Randall v. Sprague, 21 C. C. A. 337; Hagerman v. Norton, 46 C. C. A. 4.]

Appeal from the District Court of the United States for the Southern District of New York.

For opinion below, see 160 Fed. 268.

E. L. Owen, for appellant.

Hagen, Goodrich & Coughlan, for appellees.

Before LACOMBE, COXE, and WARD, Circuit Judges.

WARD, Circuit Judge. The libel in this case was filed for freight, $98.84, and as amended, for demurrage of $232. The district judge allowed the freight only.

There was no charter, and the bill of lading contained no provision as to lay days or demurrage. But the second article of the libel charged as a part of the contract:

"That the lay days should be at the rate of 20,000 feet per day (Sundays and holidays excepted) after 48 hours for orders, after which demurrage at the rate of 10 cents per registered ton per day for vessels under 250 tons register."

The answer admitted these allegations. At the trial the respondent asked leave to amend the answer as follows:

"The respondent admits the allegations of the second article of the libel, except that he denies that it was a specific contract between the parties that the rate of discharge should be as named in the second article of the libel, and alleges that there was no written agreement as to the discharge of the vessel; but that the rates named in the second article of the libel are the customary rates of discharge in New York, by which the respondent is bound."

The court refused to permit this amendment, and the respondent duly excepted. It was also stipulated that the vessel was of 232 tons net register, and carried 202,791 feet of lumber; that the proper charge for demurrage was $23.20 per day; that she should have been discharged June 17, at 10 a. m., but was not discharged until June 26, at 6 p. m. The proof showed that of this delay of 10 days 1½ days were due to the refusal of the vessel's stevedores to work, and the remaining 8½ days to dredging in Gowanus Canal by public authority, which prevented the vessel from getting to the wharf to which the respondent ordered her.

Digitized by Google

We think the respondent is bound by its admissions in the pleadings, and in the case which established a contract to receive the cargo within the time fixed, and therefore left all delays, not excepted nor caused by the vessel, at the respondent's risk. Adopting, however, the contention of the respondent that the amendment to the answer should have been allowed, and that, having made no contract to pay demurrage, it was only liable to pay for delay caused by its default, we still think the libelant was entitled to recover damages in the nature of demurrage for 8½ days' delay.

The respondent relies upon the fifth conclusion of the Circuit Court of Appeals for the Eighth Circuit, in the case of the Empire Transportation Company v. Philadelphia & Reading Coal & Iron Company, 77 Fed. 919, 925, 23 C. C. A. 564, 35 L. R. A. 623:

"(5) Proof that the vessel was delayed in unloading beyond the customary time for unloading such cargoes at the port of her delivery throws upon the charterer the burden of excusing the delay, by proof of the actual circumstances of the delivery and his reasonable diligence thereunder."

The proofs showing that there was a delay of 8½ days beyond the customary time for unloading, the consignee justifies it by saying that the delay was caused by dredging of the public authorities in the canal. The bill of lading only required the vessel to deliver to the respondent or assigns in the port of New York, and although it was her duty to discharge, at the wharf to be designated by the respondent, it was equally its duty to order the vessel to a wharf where she could get. If the bill of lading had required delivery at the wharf to which the vessel was subsequently ordered, or if there were no other wharf in the port at which she could be discharged, the delay would have been at the risk of the vessel, but, this not being the case, the delay was caused by the order which the respondent gave. There was nothing unforeseen or extraordinary about the dredging, nor anything that affected the port or the trade generally. It was open and notorious. The fact that the respondent had previously sold the cargo to be delivered at this wharf without knowing of the dredging being done in the canal is no reason for throwing on the vessel the delay of getting there.

The decree is reversed, and the cause remanded to the District Court, with instructions to enter a decree for the libelant in the sum of $98.84 freight, and $197.20 demurrage, with interest from June 27, 1907, and costs.

(161 Fed. 310.)

SOUTHERN RY. CO. v. TOWNSEND.

(Circuit Court of Appeals, Fifth Circuit. March 24, 1908. On Rehearing, April 20, 1908.)

No. 1,351.

1. RAILROADS—FORECLOSURE SALE—CONDITION REQUIRING PURCHASER TO PAY CLAIMS AGAINST RECEIVERS—CONSTRUCTION OF DECREE.

Where a court, in its decree confirming the sale of railroad property in a foreclosure suit, required the purchaser to assume and pay any indebtedness or liability incurred by the receivers which should be adjudged priority over the mortgage and should not be paid by the receivers from

Digitized by Google

funds in their hands, and reserved jurisdiction of the case for the enforcement of such requirement, a subsequent order, requiring all claimants to present their claims before the master before a date fixed, for action thereon by the court, and barring any not so presented, does not necessarily include claims which were then in suit before the same court.

2. SAME—RECEIVERS—GROUNDS FOR APPOINTMENT—ACTIONS PENDING AGAINST DISCHARGED RECEIVERS.

On a subsequent discharge of the receivers, such actions at law pending against them not having been disposed of, the court had power, under such reserved jurisdiction, to appoint a special receiver against whom such actions might be revived, and to defend the same and retake possession of sufficient property to satisfy any judgments recovered, if not paid by the purchaser.

Burns, District Judge, dissenting.

Appeal from the Circuit Court of the United States for the Northern District of Alabama.

Milton Humes and Paul Speake, for appellant.

Lawrence Cooper, for appellee.

Before McCORMICK, Circuit Judge, and NEWMAN and BURNS, District Judges

NEWMAN, District Judge. On July 27, 1892, the Memphis & Charleston Railroad was placed in the hands of Charles M. McGhee and Henry Fink as receivers, in the Western district of Tennessee, and on July 29th thereafter, under an ancillary bill filed in the Northern division of the Northern district of Alabama, the same receivers were named for the property of the railroad company in Alabama. On April 15, 1897, a decree of foreclosure of the mortgage, which was one of the purposes of the bill, was entered in the Circuit Court for the Northern District of Alabama, following a decree of foreclosure in the Western district of Tennessee. Subsequently, in 1898, the property was sold, and the order confirming the sale contains this provision:

"* * * Ordered, adjudged, and decreed that the sale so reported by said special master, and the purchase of said railroad property, rights, assets, and franchises by said purchasers shall be, and the same is hereby, confirmed. And the court reserves full power from time to time to enter orders binding upon the said Southern Railway Company, as purchaser, requiring it and its successors and assigns to pay, satisfy, and discharge: * * * (b) Any unpaid indebtedness and obligations or liabilities which shall have been duly contracted or incurred by the receivers before delivery of possession of the property sold. * * * The court reserves full power, notwithstanding such conveyance and delivery of possession, to retake and resell the property this day confirmed, if the purchasers or their successors or assigns shall fail or neglect fully to complete such purchase and to comply with the orders of the court in respect to full payment and performance of such bid, or to pay into court, in accordance with such decree of sale, and supplemental decree, all such sums of money hereafter ordered by the court to be paid into its registry to discharge any and all such debts, liens, or claims as it may adjudge and decree should be paid out of the proceeds of sale in preference to the bonds secured by the mortgage of the said Memphis & Charleston Railroad Company herein foreclosed. * * *"

A deed was made to the purchaser of the property, the Southern Railway Company. The special master's deed conveying the property contained the following provisions:

Digitized by Google

"Witnesseth: * * * Upon the condition that, to the extent that the assets or the proceeds of the assets in the receiver's hands shall be insufficient the said Southern Railway Company and the said purchasers, its or their successors or assigns, shall pay, satisfy and discharge: * * * (b) Any unpaid indebtedness and obligation or liabilities which were duly contracted or incurred by the receivers before delivery of possession of the property sold. * * * And subject also to all the conditions and reservations of said deed of sale, * * * including the reservation to said Court of the power to retake and resell the premises conveyed or any parcel thereof, in case the said parties of the second party, their successors and assigns shall fail to pay any sum required by them under said decrees within the time specified in said decrees, respectively, after the entry of an order requiring such payment. * * * And the grantees, parties of the second part, agreeing to take the property so sold as aforesaid, subject to the performance by them, or by their successors or assigns, of all pending contracts in respect thereto, theretofore lawfully made by the receivers, the said grantees and their successors or assigns, having nevertheless the right, within ninety days after the completion of the sale and delivery of this deed, to elect whether or not to assume or adopt any lease or contract whether or not sold with the railroads and other property and franchises, neither they nor their successors or assigns to be held to have assumed any of said contracts or leases, which they shall not so elect to assume; provided, however, that upon publication by the said special master, when ordered by the court, as provided in said decree, of a notice requiring holders of any claims to present the same for allowance, and any such claim which shall not be so presented or filed within the period of six months after the first publication of such notice, shall not be enforceable against the property sold, or against the said grantees, their successors or assigns. * * *"

On March 16, 1898, an order was entered in this case, appointing a special master for the purpose of taking proof and reporting upon all claims which arose within the Northern district of Alabama, or which were held by parties residing within said district, against Charles M. McGhee and Henry Fink, receivers of the Memphis & Charleston Railroad Company, or against the said Memphis & Charleston Railroad Company under this decree. The order provided that:

"Said special master will make publication in some newspaper published in Huntsville, Alabama, once a week for three successive weeks, requiring all creditors or persons having claims which arose within the Northern district of Alabama or which are held by parties residing within said district either against the said receivers of the Memphis & Charleston Railroad Company or against the said Memphis & Charleston Railroad Company, claiming priority over the mortgage bonds, to file the same herein on or before September 24, 1898, for allowance and action thereon by this court, or the same shall be forever barred and denied any participation in the assets in the hands of said receivers. Said master will after the filing of any such claims, and after giving due notice of the same to the counsel representing such claims, and to the Southern Railway Company, take such proof as may be offered in support of, or in defense of such claim, and report thereon for the action of the court herein. Any claim against such receivers, or against the said the Memphis & Charleston Railroad Company within the jurisdiction of this court not filed within the time required hereby shall be forever barred from all participation in the assets derived from the sale of the mortgaged property made in this case."

Subsequently the receivers were discharged, and their bonds canceled. At the time the order was made appointing the special master to take proof of claims, etc., on March 15, 1898, an action was pending in the same court—that is, in the Circuit Court of the United States for the Northern Division of the Northern District of Alabama—in favor

Digitized by Google

of Lemon Townsend against McGhee and Fink, receivers, for damages which he alleged he had sustained by reason of the negligence of the receivers, their agents, servants, and employés, while in the employment of said receivers.

Subsequently to the discharge of the receivers, Lemon Townsend brought a petition in the Circuit Court, setting out the fact of the appointment of McGhee and Fink as receivers in 1892, their operation of the property down to 1898, the order discharging them as receivers, and that the Southern Railway Company had become the purchaser, and that said company had taken the property by its purchase, subject to the unpaid obligations and liabilities incurred by the receivers. The petition sets out the fact of his injury in 1896, while in the employ of the receivers, by reason of the negligence of the receivers, their employés and agents, while they were in charge of the railroad property, and the fact that his suit had been brought on the 16th day of March, 1897, for the recovery of damages by reason of his injuries. It further alleges that the Southern Railway Company had failed and refused to pay him damages for the injuries so sustained, and that he is advised that he is wholly remediless in the premises, in the prosecution of his suit, unless by order of the court a receiver or receivers are appointed for the property theretofore belonging to the Memphis & Charleston Railroad Company, so that his suit can be maintained and prosecuted to judgment, and the amount due him ascertained as provided by law. He states the fact that other suits are pending in the Circuit Court of the United States for the Northern Division of the Northern District of Alabama, instituted against McGhee and Fink as receivers, and which remain undetermined. He prays that by the decretal order of the court a receiver be appointed for the properties of the Memphis & Charleston Railroad against whom his said suit may be prosecuted, under the orders of the court.

This petition was answered by the Southern Railway Company, which set up as a defense to the suit the order of the court requiring all claims to be filed by September 24, 1898, and that, although the special master appointed by the order had given the notice required, Lemon Townsend had failed to come in and make proof of his claim before the special master, and that he was barred of any right or claim against the Southern Railway Company by reason thereof.

Judge Jones entered a decree appointing a receiver; the decree of appointment being as follows:

"Upon the consideration of the petition of Lemon Townsend, filed in this cause on the 14th day of October, 1902, and the answer thereto of the Southern Railway Company and the record of proceedings in this cause, and also the record of proceedings in the other equity cause in this court of Farmers' Loan & Trust Company v. Memphis & Charleston Railroad Company and certified statements of E. E. Greenleaf and John B. Clough as special masters on file in this cause the court finds: (1) That the discharge of the receivers herein, Chas. M. McGhee and Henry Fink, was not intended as a final disposition of this cause, but that the court expressly retained jurisdiction to make such further orders therein as might from time to time be deemed proper. (2) That the purchaser of the property of the Memphis & Charleston Railroad Company, which was sold under decree of foreclosure in this cause, agreed, as a part of the consideration, and in addition to the sum bid at such foreclosure sale, to pay any unpaid indebtedness and obligations

Digitized by Google

or liabilities 'which shall have been duly contracted or incurred by the receivers before delivery of the possession of the property sold.' (3) That the purchaser of the property so sold at said foreclosure sale went into possession of said property, and accepted a deed thereto, under which the purchaser holds said property subject to the payment of the liabilities of said receivers, and by deed of indenture covenanted and agreed to pay and discharge said liabilities. (4) That in the decree confirming said sale, the court reserved full power, notwithstanding the conveyance and delivery of possession, to retake and sell the property if the purchaser or its successors should fail to comply with any of the orders in respect to the payment of the full consideration of said bid. (5) That said Chas. M. McGhee and Henry Fink, former receivers, left some liabilities incurred by them as such receivers in the operation of the Memphis & Charleston Railroad under the orders of this court, as to which actions were pending against them at the time of their discharge, which liabilities are still in litigation and remain unpaid. It further appears to the court that the petitioner Lemon Townsend and other petitioners similarly situated have pending actions at law which have not been disposed of by judgments in the law courts in which they are pending, and which were pending at the time of the discharge of said receivers, and have an equity if they obtain judgment against a receiver in this case, to subject said property of the Memphis & Charleston Railroad in the hands of the purchasers, to the payment of the debts and liabilities of the receivers incurred in the operation by said McGhee and Fink as receivers, and the further right to litigate the liability of the receivers to them by suit in a court of law.

"On consideration of the premises the court is of the opinion that a trust exists which might fail for want of a trustee, if no successor is appointed to said McGhee and Fink as receivers to fully execute said trust, and conserve the rights of the persons interested therein. It is therefore ordered, adjudged, and decreed that Edward E. Greenleaf, of Huntsville, Ala., be and he is hereby appointed receiver in this cause of the property, assets, and rights of the Memphis & Charleston Railroad Company, as successor to said McGhee and Fink, receivers, but without power, except as herein otherwise decreed, to interfere with or take possession of any of the property of the Memphis & Charleston Railroad which has heretofore been sold by decree of this court; and that said Greenleaf, as such receiver, shall defend all suits now pending against said McGhee and Fink as receivers concerning their liabilities growing out of their operation as receivers of the Memphis & Charleston Railroad, whenever such suits shall be properly revived against him. In that event he shall immediately notify the purchasers of the property of the Memphis & Charleston Railroad of the revivor of said suit against him, and notify the purchasers that they may appear and defend in his name, if they so desire. Whenever any judgment is rendered against said Greenleaf as receiver in any action or suit revived against him, and which was pending at the time of the discharge of said McGhee and Fink as receivers, whether the purchasers appear and defend on said action or suit or not, said Greenleaf, as receiver, shall report the facts to the court, and, after giving five days' notice to the purchasers, shall proceed by petition in this cause for a decree to sell so much of the property conveyed to the purchaser by the special master's deed of date February 26, 1898, as may be necessary to pay the judgment so rendered against said Greenleaf as receiver, and the costs and expenses incident thereto, including the costs and expenses of such petition."

It is from the granting of this decree that the present appeal is taken.

Was there such error in the action of Judge Jones in entering this decree as requires its reversal?

This was an administrative order made in connection with the foreclosure proceeding and receivership, looking to the protection of those having claims against the property which had been in the hands of the court and had been sold with the reservations shown in the order con-

Digitized by Google

firming the sale and in the deed to the purchasers. It was the method adopted by the court of enabling Lemon Townsend and others similarly situated to assert against the Southern Railway Company whatever claims they might have against that company. The court appointed the receiver with the limited powers stated in the decree of appointment, because, by the discharge of McGhee and Fink as receivers, Townsend and others had been left without any one against whom they might assert their claims. Other methods might have been adopted for reaching the same result, but that which was adopted does not seem to us to have violated any sound principle of equity, or any rule of equity practice. Townsend and others had no one, as the case stood (at least it was evidently so considered by the court) against whom they might assert their rights, and even the right to show that their claims were not barred by the order of March 15, 1898, providing for the filing of claims, etc.

The important question, coming to the merits of this matter, of course, is whether Townsend and others similarly situated were barred from asserting their rights against the purchasers of the property by reason of their failure to file their claims with the master as provided in the order of March 15, 1898. Their suits were pending at the time and in the court in which this order was entered, and we are not satisfied that the order could be held to embrace them. The order requires "all creditors or persons having claims, * * * claiming priority over the mortgage herein, to file the same herein on or before September 24, 1898, for allowance and action thereon by this court, or the same shall be forever barred," etc. The claims of Townsend and others were filed, as stated, in the court at the time this order was made, and we do not believe that the reasonable purpose and intent of this order was such as to require them to be filed again. Certainly counsel for Townsend and plaintiffs in other cases thus pending might well have considered the order as not applying to such cases, and the court might well hold we think, as it did, that the order limiting the time for filing claims did not necessarily require these claims to be noted before the master, and might do so without any invasion of the lawful rights of the purchasers of the property. The language of the order, it will be perceived, is that parties are required, as to demands claiming priority over the mortgage, "to file the same herein * * * for allowance and action thereon by this court." Even considering the language of the order specifically and technically, we do not see that it embraces these suits, and considered with reference to its purpose and intent, as has been stated, it is still more evident that they were not included. The purpose was to get before the court within a reasonable time all claims and demands which the purchasers would have to pay, if determined against them, and Townsend's claim, and that of the others in like situation, were then before the court.

The particular language of the deed made by the special master to the Southern Railway Company and others, which is relied upon here by the Southern Railway Company as a defense to this proceeding, concerning debts which "shall not be enforceable against the property, sold, or against the said grantees, their successors or assigns" is : "Any such claims which shall not be so presented or filed within the period of

Digitized by Google

six months," etc. As stated, we think the claims of Townsend and others, being already of file in the court, there was no necessity for presenting them to the special master. The language used in the deed follows and conforms to the language used in the order confirming the sale, and the purchasers could not acquire any different or more enlarged rights or exemptions from liability by reason of the deed than they acquired by the order of confirmation.

Finding no error in the action of the court in entering the decree appointing Greenleaf receiver for the purposes stated, and with the restricted powers named therein, the decree is affirmed.

BURNS, District Judge (dissenting). The writer, with great deference to the view announced by the majority in sustaining the action of the lower court in the appointment of a receiver of the Memphis & Charleston Railroad to appear and defend cases pending on the law side of the docket in the Northern district of Alabama, is unable to concur, and the reasons therefor should be briefly stated.

The record proceedings are fully given in the statement of the case, from which it appears that plaintiff, Townsend, was injured December 8, 1896, while in the service of McGhee and Fink, receivers; that he filed suit against the said receivers on March 16, 1897; that the said receivers were finally discharged February 26, 1898, and thereafter, by order dated March 15, 1898, claimants were allowed six months in which to present claims growing out of the receivership to the special master, and claims not so presented were to be deemed barred. The case of Townsend appears to have continued upon the law side of the docket without progress until entry of order of date October 14, 1903 (based on petition of that date), appointing Greenleaf receiver. The situation obtains that 11 years after institution of the action at law, and 10 years after the final discharge of the receivers, it is deemed equitable that a receiver should appear and defend in order that a presumed or possible trust might be the more fully and equitably administered. There is no suggestion, or contention, that the purchaser, the Southern Railway Company, is at fault, or that it dissents from the terms and conditions imposed by the final decree of foreclosure. The plaintiff, Townsend, had more than 14 months after injury in which to prosecute his action against the original receivers, and his suit continued upon the docket more than 11 months before the receivership was closed. After the discharge of the receivers, a plea in abatement was filed setting up their discharge, and the record discloses that the plea has not been determined.

If it should appear that the plaintiff, notwithstanding the discharge of the receivers, had a clear, positive, and adequate remedy at law, it is difficult to understand why a court of equity should reach out its arm and by process of development employ other and unusual facilities in behalf of this sleeping litigant. It may be pertinent to depart from a statement of the general rule that equity will never grant relief where the complainant has an adequate remedy at law, to point out the legal remedy available to the plaintiff upon the discharge of the receivers. By amending his petition, setting up the discharge of the receivers, making the purchaser, the Southern Railway Company, a party defend-

Digitized by Google

ant, under the terms of the decree fixing the liability for the acts of the receivers, the plaintiff upon verdict, would have been entitled to his execution. This is the proper and usual course, not attended with difficulty, and doubtless familiar to practitioners in the state and federal courts. This statement should be conclusive of the proposition that plaintiff had and has an adequate remedy at law, and, more, he could have instituted and maintained his suit against the receivers, and upon their discharge, against the purchaser, in any state court of Alabama. Act Cong. March 3, 1887, c. 373, 24 Stat. 552, as amended by Act Aug. 13, 1888, c. 629, 25 Stat. 433 (U. S. Comp. St. 1901, p. 508).

In the case of Cahn v. Johnson, 12 Tex. Civ. App. 304, 33 S. W 1002, the court uses this language:

"The first question arising from the record, and presented by appellant's assignment of error, is: Will a court of equity grant its aid by appointing a receiver in favor of mere general creditors, whose rights rest only in contract and are not reduced to judgment, and who have acquired no lien upon the property of the debtor? Upon the great weight of authority, we answer this question in the negative." High, Rec'r (3d Ed.) § 406, and authorities cited in note 1, page 430; Wiggins v. Armstrong, 2 Johns. Ch. (N. Y.; Lawyers' Ed.) 144, and authorities cited in note; 3 Pom. Eq. Jur. § 1415; 20 Am. & Eng. Enc. Law, p. 30; Carter v. Hightower, 79 Tex. 135, 15 S. W. 223.

The existence of an adequate remedy at law is always a bar to the aid of equity granting a receivership. High on Receivers, par. 741. A receiver will not be appointed if any other remedy will afford ample protection. Etowah Min. & Mfg. Co. v. Wills Valley Min. & Mfg. Co., 106 Ala. 492, 17 South. 522. To justify the appointment it must appear that the possession of defendant was obtained by fraud, or that the income is in danger of loss from neglect, waste, or misconduct. Gilbert v. Block, 51 Ill. App. 516. The power to appoint a receiver will never be exercised except upon a very grave necessity and upon a clear showing that the applicant has otherwise no adequate remedy, and is in danger of suffering irreparable loss. People's Investment Co. v. Crawford (Tex. Civ. App.) 45 S. W. 738; Cahn v. Johnson, 12 Tex. Civ. App. 304, 33 S. W. 1000; Bank v. Dunham, 18 Tex. Civ. App. 184, 44 S. W. 605; Land Co. v. Blevens, 12 Tex. Civ. App. 410, 34 S. W. 832; High on Receivers, Par. 3, 288, 289, 292; 20 Am. & Eng. Ency. Law, pp. 18–21; Bank v. Gage, 79 Ill. 207; Weatherly v. Water Co., 115 Ala. 156, 22 South. 142; Darragh v. Manufacturing Co., 78 Fed. 15, 23 C. C. A. 609.

The opinion in People's Investment Company v. Crawford, supra, concludes with this statement:

"The appellees' remedy without the aid of a receiver being adequate, it follows that the trial court erred in making the appointment, for which error the order of the court below appointing the receiver in this case is reversed, set aside, and the receivership vacated."

Before appointment is made, the court must be satisfied that a receiver is necessary to preserve the property, and thus adequately to protect the rights of the parties interested therein. Clark v. Ridgely, 1 Md. Ch. 70; Orphan Asylum Soc. v. McCartee, Hopk. Ch. (N. Y.) 429; Chase's Case, 1 Bland (Md.) 213, 17 Am. Dec. 277; Blondheim

Digitized by Google

v. Moore, 11 Md. 365; Walker v. House, 4 Md. Ch. 39; Bloodgood v. Clark, 4 Paige (N. Y.) 574; Lloyd v. Passingham, 16 Ves. Jr. 59–70.

If the plaintiff has an adequate remedy at law, then a receiver will not be appointed. This principle is but the application in receivership matters of a general principle in equity jurisprudence. Smith on Receivership, § 5, p. 14; Wooden v. Wooden, 3 N. J. Eq. 429; Mullen v. Jennings, 9 N. J. Eq. 192; Speights v. Peters, 9 Gill (Md.) 473; Rice v. Ry., 24 Minn. 464; Corey v. Long, 43 How. Prac. (N. Y.) 497; Parmly v. Bank, 3 Edw. Ch. (N. Y.) 395; Winkler v. Winkler, 40 Ill. 179; Coughron v. Swift, 18 Ill. 414.

The mere fact that the pursuit of the legal remedy is difficult, or that the remedy at law has been lost by the laches of the party entitled thereto, will not be sufficient to justify the appointment of a receiver. Alderson on Receivers, § 7, p. 11; Brown v. Chase, Walk. Ch. (Mich.) 43; Kean v. Colt, 5 N. J. Eq. 365; Fogarty v. Burke, 2 Dru. & War. 580; Gray v. Chaplin, 2 Russ. 126; Skinners Company v. Irish Society, 1 Myl. & Cr. 162; Drewry v. Barnes, 3 Russ. 94; Municipal Com'rs v. Lockhart, Ir. 3 Eq. 515.

It may be observed that the order of the court appointing Greenleaf receiver will defeat the very object which the plaintiff has in mind, in that the plaintiff and the receiver, being resident citizens of the state of Alabama, the Circuit Court will be without jurisdiction of the parties, and, aside from this, the statute of limitation will be as available to the receiver as to the purchaser.

On Rehearing.

PER CURIAM. There is no new ground or argument advanced in this application for rehearing. The judges who sat on the original hearing gave the matter a very careful consideration, and only reached a conclusion in the case after going over the whole matter very carefully, and they all concur in the view that the petition of the appellant for a rehearing should be denied.

And it is so ordered.

(161 Fed. 318.)

STERNBERG MFG. CO. v. MILLER, DU BRUL & PETERS MFG. CO.

(Circuit Court of Appeals, Eighth Circuit. April 11, 1908.)

No. 2,655.

1. TRADE-MARKS AND TRADE-NAMES—NAME USED TO DESIGNATE PATENTED ARTICLE—EFFECT OF EXPIRATION OF PATENT.

Where complainant manufactured and sold a cigar mold under a patent, and adopted the name "Vertical Top" to designate such mold alone in its literature, catalogues, etc., which it used during the life of the patent, on its expiration the name, as well as the article, became free to the public, and complainant could not perpetuate its exclusive right thereto by registering it as a trade-mark.

[Ed. Note.—For cases in point, see Cent. Dig. vol. 46, Trade-Marks and Trade-Names, § 15.]

2. SAME—UNFAIR COMPETITION.

Evidence *held* to entitle complainant to an injunction restraining defendant from unfair competition in making and selling a cigar mold des-

Digitized by Google

ignated by the same name as one made by complainant, and in using similar cuts in its catalogues representing cigar maker's tools, without stamping its name upon such molds and plainly indicating on the cuts that it, and not complainant, was the manufacturer of the articles represented thereby.

[Ed. Note.—For cases in point, see Cent. Dig. vol. 46, Trade-Marks and Trade-Names, § 106.

Unfair competition, see notes to Scheuer v. Muller, 20 C. C. A. 165; Lare v. Harper & Bros., 30 C. C. A. 376.]

Appeal from the Circuit Court of the United States for the Southern District of Iowa.

W. J. Roberts, for appellant.

Hervey S. Knight and William C. Howell, for appellee.

Before HOOK and ADAMS, Circuit Judges, and PHILIPS, District Judge.

PHILIPS, District Judge. This is a bill in equity by the appellee, an Ohio corporation (hereinafter designated the complainant), to enjoin the appellant, an Iowa corporation (hereinafter designated the defendant), from infringing a trade-mark, known as the "Vertical Top," used on cigar molds, claimed to have been adopted by the complainant as early as 1876. After the complainant had taken evidence in chief in support of this bill, it filed a supplemental bill, charging the defendant with unfair competition in business.

The Miller & Peters Manufacturing Company was organized in 1873. Its name was changed in 1880 to the Miller, Du Brul & Peters Manufacturing Company. Its principal place of business was at Cincinnati, Ohio, with branches in other cities. The defendant had been in business since 1893, as a copartnership under the name of William Sternberg & Co. until 1895, when it was incorporated under its present name. On April 4, 1876, Frederick C. Miller, a member of said firm of Miller & Peters Manufacturing Company, obtained letters patent No. 175,573, entitled "improvement in cigar molds." The specifications, in so far as pertinent to this inquiry, are as follows:

"This invention relates to cigar molds adapted for pressing a number of bunches of tobacco into cigar shape, the bunches being placed in deep matrices, and simultaneously pressed into the required form by the operation of a series of plungers or cups. My improvement consists: First. In so constructing the plungers or cups, which are made of wood like the rest of the mold, that the grain of the wood shall run vertically—that is, at right angles to the face of the backing to which the plungers are attached. This enables me to obtain, not only durable, but also sharp, edges along the sides of the concaved face of the plungers, which sharp edges are of the utmost importance to the proper action of the mold, and which, if formed on plungers having the grain of the wood running longitudinally, in accordance with the common method of construction, do not possess the requisite strength and durability. Second. Of a peculiar method of securing the plungers or cups to their backing, whereby a strong attachment and a perfect register with the matrices is obtained. This method consists in making the matrices somewhat deeper than required; then gluing the backing to the face of the matrix-board; then sawing the block thus formed into two parts on a line a little below the top of the matrix-board, so that a thin strip of it will remain attached to the backing for the plungers; and, finally, inserting the plungers or cups in the cavities in this thin strip of the matrix-board adhering to their backing, and

Digitized by Google

securing them in proper manner. Third. In the combination, with the matrix-board, of one or more bars for expelling the bunches after they have been pressed. The bar is seated in a longitudinal groove across the matrices, its upper edge having notches corresponding to the cross-sectional contour of the matrices."

Its first claim is as follows:

"1. The plunger or cup of a cigar mold made of wood, the grain of which runs perpendicularly to the plane of the cup, substantially as specified."

It will be noticed that the invention specified in the claim is rather upon the plunger or cup (top) of the individual mold than the series. While it recites that the invention pertains to cigar molds used by "the operation of a series of plungers or cups," the claim specifies the single plunger or cup as the real improved device. Molds embodying the improvement were thereafter manufactured and marketed by the Miller & Peters Manufacturing Company under the designation of the "Creaseless Vertical Top Cigar Mold." Its use passed to the complainant under the abbreviated name of the "Vertical Top" mold for cigars, and was extensively advertised by the complainant. Without stating in detail the evidence, suffice it to say that during the life of the patent the words "Vertical Top" became associated with the manufactured article as descriptive of its character and quality, indicating the complainant's best grade of mold for making cigars. If it was descriptive or indicative of the grade or quality of the cigar mold, it could not be regarded as a trade-mark, especially during the life of the patent. Paul on Trade-Marks, page 47, §§ 27, 28; Columbia Mill Co. v. Alcorn, 150 U. S. 460, 14 Sup. Ct. 151, 37 L. Ed. 1144; Raymond v. Royal Baking Powder Co., 85 Fed. 231, 236, 29 C. C. A. 245; Centaur Co. v. Heinsfurter et al., 84 Fed. 955, 28 C. C. A. 581.

The specification of the patent itself shows that the two halves of the mold at the point of contact should be made of hard wood in order to withstand great pressure. The upper half is made with the grain of the wood running vertically, up and down; the edges, owing to the vertical grain of the wood, being stronger than if it were made of iron, according to the complainant's testimony. It was stated in the circular literature issued by the complainant that no nails, staples, or pegs were used in the construction of "our creaseless Vertical Top molds." The circular further stated: "Our Vertical Top creaseless mold is not only the best, but the cheapest, because it will last twice as long as any ordinary mold and will produce far better and paying results." In short, the very claimed invention of the Vertical Top mold was to remedy the hitherto ill-fitting tops with their thick edges; and the evidence further discloses that the term "Vertical Top" was employed to indicate the best quality of mold manufactured by the patentee, as distinguished from the "Flange Top" manufactured by the complainant as an inferior article.

When this patent expired in 1903, the complainant clearly enough, as we think, sought to perpetuate its monopoly by registering the name "Vertical Top" as a trade-mark. In the leading case of Singer Manufacturing Co. v. June Manufacturing Company, 163 U. S. 169,

Digitized by Google

16 Sup. Ct. 1002, 41 L. Ed. 118, after the expiration of the Singer Manufacturing Company's patent, it sought to perpetuate its monopoly by adopting and laying claim to the exclusive use of the word "Singer" as a trade-mark, which term had become designative of the machine manufactured and sold by the company during the life of the patent. The court held that the designation of the machine as "Singer" during the existence of the patent indicated merely the class and type of the machine made by the company; that it constituted "the generic description, conveying to the public mind the machine made by it." Mr. Justice White further said:

"It is self-evident that on the expiration of the patent the monopoly created by it ceases to exist, and the right to make the thing formerly covered by the patent becomes public property. It is upon this condition that the patent is granted. It follows, as a matter of course, that on the termination of the patent there passes to the public the right to make the machine in the form in which it was constructed during the patent. * * * It equally follows from the cessation of the monopoly and the falling of the patented device into the domain of things public, that along with the public ownership of the device there must also necessarily pass to the public the generic designation of the thing which has arisen during the monopoly, in consequence of the designation having been acquiesced in by the owner, either tacitly, by accepting the benefits of the monopoly, or expressly, by his having so connected the name with the machine as to lend countenance to the resulting dedication. To say otherwise would be to hold that, although the public had acquired the device covered by the patent, yet the owner of the patent or the manufacturer of the patented thing had retained the designated name, which was essentially necessary to vest the public with the full enjoyment of that which had become theirs by the disappearance of the monopoly; in other words that the patentee or manufacturer could take the benefit or advantage of the patent upon the condition that at its termination the monopoly should cease, and yet, when the end was reached, disregard the public dedication and practically perpetuate indefinitely an exclusive right. The public having the right on the expiration of the patent to make the patented article and to use its generic name to restrict this use, either by preventing its being placed upon the articles when manufactured or by using it in advertisements or circulars would be to admit the right and at the same time destroy it."

This was followed and applied by Mr. Justice Brewer, speaking for this court, in Centaur Co. v. Heinsfurter et al., supra. In that case one Pitcher obtained letters patent No. 77,758, for a composition to be employed as a cathartic, or substitute for castor oil; and, while the word "Castoria" did not occur in the specifications, it was claimed to have been adopted and used as a trade-mark during the life of the patent, and was attempted to be exclusively continued in use thereafter. But it was held that on the expiration of the patent such name became public property, and its use by another, without unfair competition, did not entitle the complainant to relief against the use of the word "Castoria" by the defendant for its manufactured composition.

Counsel for complainant quite ingeniously attempts to differentiate the case at bar from the foregoing by the suggestion that the words "Singer" and "Castoria" describe the articles patented, and therefore necessarily became generic terms. But the essence of the ruling in the foregoing cases is that the patent conferred only the right of exclusion to manufacture and sell the article, and not the appropriation of any particular name, whether it was merely arbitrary or sug-

Digitized by Google

gested by the thing itself, and that after the expiration of the patent, not only the right to manufacture and sell the patented article, but also to use the particular name by which the patentee had designated it, passed to the public. Mr. Justice Brewer said:

"It is true that during the life of a patent the name of the thing may also be indicative of the manufacturer, because the thing can then be manufactured only by the single person; but, when the right to manufacture and sell becomes universal, the right to the use of the name by which the thing is known becomes equally universal. It matters not that the inventor coined the word by which the thing has become known. It is enough that the public has accepted it as the name of the thing, and thereby the word has become incorporated as a noun in the English language and the common property of all."

Having regard to the philosophy of the principle, it can make no difference that the Centaur Company designated its moderate imitation of castor oil by the name of "Castoria," and that the complainant should have designated its manufacture as "Vertical Top," because of the manner in which the grain ran into the wood constituting the top. Notwithstanding the studied effort of Mr. Du Brul in his testimony to evade the fact, his cross-examination compels the conclusion that the words "Vertical Top" were employed in his manufacture and trade to designate a superior quality in construction as compared with the "Flange Top" employed in the manufacture and sale of cigars.

The Circuit Court found the issues for the complainant, whereby it not only affirmed the claim of the complainant to the trade-mark, but the language of the decree is so broad and comprehensive as to perpetuate the exclusive right of the complainant to manufacture the mold and all the tools, implements, and machinery connected therewith. After sustaining the trade-mark, the decree adjudged:

"That the defendant, its officers, agents, employés, etc., are hereby perpetually enjoined and restrained from making or selling or offering for sale cigar makers' presses, bundlers, tools, machinery, and accessories to the cigar makers' trade, in substantially exact imitation of the presses, bundlers, tools, machinery and accessories to the cigar makers' trade manufactured by the complainant and having a characteristic shape and design, and from copying or reproducing in its catalogue, circulars, and other printed advertising matter the cuts, figures, illustrations, or representations originated, produced, and used by the complainant in its circulars and catalogues in advertisement of the presses, bundlers, tools, machinery, and accessories to the cigar makers' trade manufactured and sold by the complainant."

Was the complainant entitled to relief on the supplemental bill charging the defendant with unfair competition in business? As the tools, implements, and machinery employed by the complainant, in connection with its manufacture of the molds, were not covered by any patent grant, they were free to the public to manufacture and use, even in exact imitation of those employed by the complainant. Singer Manufacturing Co. v. June Manufacturing Co., supra; Lamb et al. v. Grand Rapids School Furniture Co. (C. C.) 39 Fed. 474. The only limitation the law places upon the right of the defendant to manufacture and sell the molds and to manufacture and use the tools, implements, etc., like those hitherto employed by the complainant, is that he shall not so exercise it as to impose his manufactured article

Digitized by Google

upon the public as that of the complainant's product. As expressed by Mr. Justice White, in the Singer Manufacturing Co. Case, the right is "accompanied with the obligation of so exercising it as not to destroy the property of others, and also in such a manner as not to deceive the public."

When the defendant began the manufacture and sale of the "Vertical Top" mold in Iowa, although it had the right, it did not stamp upon or otherwise mark the molds manufactured by it with the words "Vertical Top"; but it distinctly stamped its own name thereon, indicating the origin of manufacture. Later it moved its business to Milwaukee, Wis., where its factory, with its stamps, etc., were destroyed by fire. Mr. Sternberg in his testimony, assigned to that misfortune the reason for not stamping its molds made at Milwaukee afer the fire with its name, intending to do so when it procured the stamp. This omission covered a period of about a year. This was unimportant, however, under the decisions hereinbefore cited, in view of the fact that it did not stamp its molds with the words "Vertical Top."

The only basis for complaint of unfair competition is reduced to the pamphlets and literature sent out by the defendant, in which it is claimed it so closely followed the cuts, figures, and the order of their occurrence in the display of like publications by the complainant as not to sufficiently distinguish one from the other. It is true the evidence on behalf of the defendant, which was uncontradicted, was that all of the tools, implements, machinery, etc., published by it, were of its manufacture. It must also be conceded to the defendant that the complainant's evidence fails to show affirmatively that any purchaser was thereby deceived into the belief that he was purchasing the goods of the complainant's manufacture. There was some indicia about the pamphlets, etc., sent out by the defendant with the names on them, from which it might, if seen, be inferred that the cuts, figures, etc., were manufactured by it. Without entering into a detailed delineation, we are of the opinion that the close copy in the pamphlets and literature published by the defendant, and the order of the arrangement of the closely imitated cuts of tools, implements, and machinery of the complainant, were such as to impose upon the defendant, in fair, honorable competition, the obligation of more distinctly indicating that the articles as pictured and described were of its manufacture, so as to reasonably advise the public thereof. This the defendant was not sufficiently doing at the time the supplemental bill was filed; and the evidence does not disclose a declared purpose on its part to make any change in this respect.

But it is apparent, from the part of the decree above quoted, that it goes beyond the limitations imposed by the law. It goes to an extent as if the complainant had an exclusive monopoly of the right to manufacture and use "the tools, machinery, and accessories to the cigar makers' trade."

The decree of the Circuit Court must therefore be reversed, and the case is remanded, with directions to set aside and vacate the decree herein, and in lieu thereof to enter a decree dismissing the bill of complaint as to the claimed trade-mark right to the words "Vertical

Digitized by Google

Top," and on the supplemental bill to enter a decree enjoining the defendant from manufacturing and placing upon the market the "Vertical Top" cigar mold, without plainly stamping thereon, or otherwise plainly indicating, the name of the defendant as the manufacturer thereof, and also from copying or reproducing, in its published catalogues, circulars, or other printed advertising matter, the cuts and figures of tools, implements, and machinery produced and published by the complainant connected with its trade, without distinctly indicating therewith, so as to reasonably advise the public, the fact that the same are of the manufacture and use of the defendant.

There is no occasion for a reference to the master. "Damnum absque injuria."

(161 Fed. 324.)

HOYT v. WEYERHAEUSER et al.

(Circuit Court of Appeals, Eighth Circuit. April 17, 1908.)

No. 2,637.

1. PUBLIC LANDS—RAILROAD LAND GRANTS—GRANTED AND INDEMNITY LANDS —WHEN TITLE VESTS RESPECTIVELY.

The right to particular tracts of land within the place limits of a railroad grant like that to the Northern Pacific Railroad Company vests in the grantee upon the filing of the map of definite location of the railroad, approved by the proper officer of the government.

The right to particular tracts of indemnity land under such a grant vests in the company upon the approval by the Secretary of the Interior of the company's selection of them, and neither this right nor the title thereunder relates back so as to divest the rights of prior entrymen or purchasers of the land under the general land laws of the United States.

[Ed. Note.—For cases in point, see Cent. Dig. vol. 41, Public Lands, §§ 232, 251.]

2. SAME—WITHDRAWALS AND SUSPENSIONS OF INDEMNITY LANDS UNDER NORTHERN PACIFIC GRANTS VOID BEFORE APPROVAL OF SELECTIONS.

Under the grants to the Northern Pacific Railroad Company, the Secretary of the Interior had no authority to withdraw or suspend from sale or entry lands within the indemnity limits of the grants which had not been previously selected with his approval, to supply deficiencies within the place limits of the grant, and such withdrawals and suspensions were ineffectual.

3. SAME—INDEMNITY LANDS OPEN TO ENTRY AND SALE UNTIL APPROVAL OF SELECTIONS.

Lands within the indemnity limits of these grants were open to entry and sale under the general land laws of the United States until the Secretary approved their selection by the grantee, although the lists of their selection had been duly filed with the Land Department.

4. SAME—LAND DEPARTMENT—JURISDICTION AND POWER OF DISPOSITION OF PUBLIC LANDS NOT ARBITRARY BUT SUBJECT TO LAW AND JUDICIAL CORRECTION.

The jurisdiction and power of disposition of the public lands by the Land Department of the United States is not arbitrary, unlimited, or discretionary; but it is subject to and must be exercised in accordance with the laws of the land, and any violation or disregard of them by the Land Department is remediable in the courts.

[Ed. Note.—For cases in point, see Cent. Dig. vol. 41, Public Lands, § 301.]

Digitized by Google

5. SAME—PATENT TO LAND—COURTS MAY CHARGE TITLE UNDER WITH TRUST FOR RIGHTFUL CLAIMANT.

Whenever the officers of the Land Department have been induced by erroneous views of the law, by fraud, or by clear mistake of fact, to issue a patent to the wrong party, a court of equity, at the suit of the rightful claimant, may avoid the decision, charge the legal title under the patent with a trust in his favor, and execute the trust.

[Ed. Note.—For cases in point, see Cent. Dig. vol. 41, Public Lands, § 301.]

6. SAME—INDEMNITY LANDS—SELECTION AGAINST ENTRY—FACTS—CONCLUSIONS.

The land in question was within indemnity limits under the grants to the Northern Pacific Railroad Company (Act July 2, 1864, 13 Stat. 365, c. 217; Joint Resolution May 31, 1870, No. 67, 16 Stat. 378), and the Secretary had withdrawn and suspended it from entry and sale. The company had filed its selection of this land, but the Secretary had not approved it. Thereupon Jones entered and paid for it under the timber and stone acts, Act June 3, 1878, c. 151, § 1, 20 Stat. 89 (U. S. Comp. St. 1901, p. 1545), and Act Aug. 4, 1892, c. 375, § 2, 27 Stat. 348 (U. S. Comp. St. 1901, p. 1547). Thereafter the Secretary approved the railroad company's selection and issued a patent for the land to that company.

Held, the entire beneficial interest and the equitable right to the land vested in Jones upon his completion of his purchase, and the railroad company and its successors in interest held the title under the patent in trust for him and his grantees.

(Syllabus by the Court.)

Appeal from the Circuit Court of the United States for the District of Minnesota.

Herbert H. Hoyt, pro se.
Charles W. Bunn, for appellees.

Before SANBORN and ADAMS, Circuit Judges, and PHILIPS, District Judge.

SANBORN, Circuit Judge. Hoyt, the complainant below, brought a suit in equity to obtain a decree that the defendants below, who were the grantees of the patentee, the Northern Pacific Railway Company, held the title to 40 acres of land in Minnesota in trust for him. The ground of his suit was that the Land Department of the United States, by reason of errors of law into which its officers had fallen, awarded and patented this land to the railway company, when its legal duty required it to award and patent it to Jones, the grantee of the complainant. He rested his claim to relief on the established and familiar rule that if the officers of the Land Department are induced to issue a patent to the wrong party by erroneous views of the law, or by a fraudulent or gross mistake of the facts, the rightful claimant may avoid that decision and charge the legal title under the patent with a trust in his favor by a proper suit in equity. James v. Germania Iron Co., 46 C. C. A. 476, 479, 107 Fed. 597, 600, and cases there cited. At the final hearing the court below was of the opinion that the officers of the Land Department had fallen into no error of law in the consideration and disposition of this land, and it accordingly dismissed the bill, and the complainant appealed.

The claim of Jones to the title to this land arose under the timber and stone acts, Act June 3, 1878, c. 151, § 1, 20 Stat. 89 (U. S. Comp. St.

Digitized by Google

1901, p. 1545), and Act Aug. 4, 1892, c. 375, § 2, 27 Stat. 348 (U. S. Comp. St. 1901, p. 1547).

On December 17, 1897, he filed in the proper local land office his application to purchase this land under these acts, and the local land officers received that application and accepted their fees for its filing. On the same day notice of this filing and that the applicant would present his proof thereunder on March 22, 1898, was issued by the register of the local land office, and on the next day it was posted and published. The land lay coterminous with the line of the railroad between Duluth and Ashland within the second indemnity limits of the grant to the Northern Pacific Railroad Company under Act July 2, 1864, 13 Stat. 365, c. 217, and the joint resolution of May 31, 1870, No. 67, 16 Stat. 378. The Secretary of the Interior had withdrawn it from entry and sale prior to 1894. The company had filed on October 17, 1883, with the officers of the local land office at Duluth, and they had accepted, a selection of this and other lands in bulk in lieu of lands claimed by it to have been lost within the place limits of its grant. In 1893 it rearranged this selection and specified the particular tract lost in lieu of which it claimed each tract upon this list of selected lands. On August 27, 1896, the Secretary of the Interior erroneously decided that the eastern terminus of the Northern Pacific Railroad was at Duluth. In re Northern Pac. R. Co., 23 Land Dec. Dep. Int. 204; Doherty v. Northern Pacific Ry. Co., 177 U. S. 421, 20 Sup. Ct. 677, 44 L. Ed. 830; United States v. Northern Pacific R. R. Co., 177 U. S. 435, 20 Sup. Ct. 706, 44 L. Ed. 836. On March 22, 1897, he caused the company's selections of this and other lands coterminous with the line of railroad east of Duluth to be canceled, and on or before July 17, 1897, he restored all this land to the public domain and made it subject to disposal under the timber and stone acts, the homestead and other general laws for the disposition of the public lands. In re Northern Pac. R. Co., 25 Land Dec. Dep. Int. 47; Jones v. Northern Pac. R. Co., 34 Land Dec. Dep. Int. 105. On February 28, 1898, he suspended these lands from entry pending the judicial determination of the location of the eastern terminus of the railroad, but directed that in all cases where entries had been theretofore allowed parties should be permitted to complete the same by making proof thereof, but that the issue of patents should be suspended until such judicial determination. In re Northern Pac. R. Co., 26 Land Dec. Dep. Int. 265; Id., 26 Land Dec. Dep. Int. 488. On March 22, 1898, Jones made plenary proof, and on December 10, 1898, he bought and paid for the land in question in strict accordance with the provisions of the timber and stone acts, and the receiver of the local land office issued the customary receiver's receipt to him, save that he wrote across the face of it in red ink:

"This receipt is issued under the order of the Secretary of the Interior dated February 28, 1898, subject to any claim the Northern Pacific Railroad Company may have to the lands herein described."

The Supreme Court decided that the eastern terminus of the Northern Pacific Railroad was at Ashland on April 16, 1900. On July 12, 1900, the Secretary restored to the records of the Land Department the selections made by the company of this and other lands coterminous

Digitized by Google

with the portion of the line of the railroad east of Duluth, because the courts had decided that the eastern terminus of the road was at Ashland, and directed that these selections should be "considered upon their legality otherwise and in connection with any conflicting claims." He never approved the selections by the company of this land, or of any land coterminous with the line of its railroad east of Duluth until months after Jones had entered and paid for the land which is the subject of this litigation. In 1905 he sustained a decision of the Commissioner of the General Land Office that the entry of Jones should be canceled, and he subsequently caused a patent of the land to issue to the railway company. Jones v. Northern Pac R. Co., 34 Land. Dec. Dep. Int. 105.

The complainant contends that this decision and action were induced by erroneous views of the law, in that the Secretary held: (1) That the Northern Pacific Railway Company had succeeded to the rights of the Northern Pacific Railroad Company to this land under the latter's land grant; (2) that the company had sustained a legal loss of the tract of land in lieu of which the land in controversy was selected; (3) that it could lawfully select the latter, although this tract was not on the same side of the railroad as the former and was not the nearest unappropriated land to it; (4) that the complainant was not entitled to the land by virtue of the provisions of Act July 1, 1898, 30 Stat. 620; and (5) that the entry of and payment for the land by Jones conferred upon him no equitable right to the land superior to that of the railway company. The last specification will be first considered because if it is well founded, the complainant was entitled to a decree below, although the first four specifications he urges were baseless. In the discussion of the questions here presented no distinction will be made between the railroad company and the railway company, but it will be assumed that the latter has succeeded to all the rights of the former, and the companies will be called the "Railway Company."

The claim of the railway company to this land is founded on the joint resolution of May 31, 1870, which provided that it should be entitled, under the direction of the Secretary of the Interior, to as many sections of land within 10 miles on each side of its road beyond the limits prescribed in its charter of July 2, 1864 (13 Stat. 370, c. 217), as would make up the deficiency in the lands within the place limits of its grant which was specified in the resolution. All the land granted by this resolution was indemnity land. None of it was within the place limits of the grant or what is ordinarily termed granted land. The right of a railroad company to granted land vests in the grantee on the filing of the map of definite location approved by the proper government officer. Its right to indemnity land vests on the approval of its selection by the Secretary of the Interior. The same rules of law govern the inception by this railway company of an equitable right to a particular tract of indemnity land under the resolution of 1870 that condition the inception of such a right under its charter of 1864, and the Supreme Court has adjudged that these principles control the initiation of such a right:

"That no rights to lands within indemnity limits will attach in favor of the railroad company until after selections made by it with the approval of

Digitized by Google

the Secretary of the Interior; that up to the time such approval is given, lands within indemnity limits, although embraced by the company's list of selections, are subject to be disposed of by the United States or to be settled upon and occupied under the pre-emption and homestead laws of the United States; and that the Secretary of the Interior has no authority to withdraw from sale or settlement lands that are within indemnity limits which have not been previously selected, with his approval, to supply deficiencies within the place limits of the company's road." Sjoli v. Dreschel, 199 U. S. 564, 565, 26 Sup. Ct. 154, 50 L. Ed. 311.

How can the claim of Jones be denied without a violation of these principles? No approval of any selection of this land by the railway company was ever made by the Secretary until after Jones had entered, purchased, and paid for it, and hence no right ever attached in favor of the company. The indorsement upon Jones' receiver's receipt that it was issued subject to any claim that the Northern Pacific Railroad Company might have to the land described in it was ineffective, because that company had and could have no legal or equitable claim to it against such a purchaser. Ryan v. Railroad Co., 99 U. S. 382, 388, 25 L. Ed. 305; St. Paul Railroad v. Winona Railroad, 112 U. S. 720, 731, 5 Sup. Ct. 334, 28 L. Ed. 872; Barney v. Winona, etc., R. R. Co., 117 U. S. 228, 232, 6 Sup. Ct. 654, 29 L. Ed 858; Wisconsin Railroad Co. v. Price County, 133 U. S. 496, 512, 10 Sup. Ct. 341, 33 L. Ed. 687; Oregon, etc., R. R. Co. v. United States, 189 U. S. 103, 112, 113, 23 Sup. Ct. 615, 47 L. Ed. 726; New Orleans Pacific Railway v. Parker, 143 U. S. 42, 58, 12 Sup. Ct. 364, 36 L. Ed. 66.

Upon the filing of the map of definite location from Thomson Junction to Ashland, this and other indemnity land was withdrawn from sale and entry by the Secretary of the Interior. Humbird v. Avery, 195 U. S. 480, 482, 25 Sup. Ct. 123, 49 L. Ed. 286. On or before July 17, 1897, these lands were restored to entry and sale (In re Northern Pac. R. Co., 25 Land Dec. Dep. Int. 47; Jones v. Northern Pac. R. Co., 34 Land Dec. Dep. Int. 105), and on February 28, 1898, they were suspended from entry by direction of the Secretary, except that those who, like Jones, had been allowed to enter land, were permitted to make proof and payment. But the Secretary's original withdrawal and his subsequent suspension were alike futile. He was without lawful authority to make either, and the lands always remained open to entry and sale under the timber and stone act, the homestead, the pre-emption, and the other general laws for the disposition of the public lands until each particular tract was either sold thereunder or the Secretary approved its selection by the railway company. Hewitt v. Schultz, 180 U. S. 139, 21 Sup. Ct. 309, 45 L. Ed. 463; Nelson v. Northern Pacific Railway, 188 U. S. 108, 23 Sup. Ct. 302, 47 L. Ed. 406; Oregon, etc., R. R. v. United States, 189 U. S. 103, 110, 23 Sup. Ct. 615, 47 L. Ed. 726.

Before the Secretary approved the company's selection of this land, Jones, a qualified entryman, entered, purchased, and paid for it in strict accordance with the provisions of the stone and timber act, and obtained his receiver's receipt therefor. From the moment of that purchase this land became the property of Jones, and it was no longer the land of the United States. He was the owner of the entire beneficial interest in and of the equitable title to it, and the only title remaining in

Digitized by Google

the United States was the naked legal title which it held in trust for him. Carroll v. Safford, 3 How. 441, 460, 461, 11 L. Ed. 671; Witherspoon v. Duncan, 4 Wall. 210, 218, 219, 18 L. Ed. 339; Wisconsin Railroad Co. v. Price County, 133 U. S. 496, 506, 10 Sup. Ct. 341, 33 L. Ed. 687.

Jones completed his purchase and obtained his receipt on December 10, 1898. His entry was not canceled until some time subsequent to August 30, 1905, pursuant to the decision of the Secretary of the Interior made on that day, and the patent was finally issued on October 18, 1905. The defendants purchased of the railway company on January 19, 1900, many years before Jones' entry was canceled. They were not therefore bona fide purchasers without notice, but they were purchasers from the United States through the railway company with full notice of the equitable right of Jones, and they stand in the shoes of their grantor the United States. As the United States never after December 10, 1898, had anything but the legal title to this land which it held in trust for Jones and his assigns, these defendants have nothing more.

Counsel for the defendants contends that the foregoing application of the rules of law which have been stated to the facts of this case is incorrect because the facts in Sjoli v. Dreschel, 199 U. S. 564, 26 Sup. Ct. 154, 50 L. Ed. 311, differ from those in the case at bar, in that Sjoli occupied his land as a homesteader before the railroad company filed its list of selections, and the company's selection of Sjoli's land was never approved. But the rules of law announced in Sjoli's Case were established by prior decisions of the Supreme Court, some of which have been cited, and it is those rules restated and reaffirmed in Sjoli's Case, and not the particular facts in that suit, which determine the controversy before us. Moreover, the decisive facts of the two cases are the same in legal effect. Sjoli initiated his equitable right to his land by settlement upon it in 1884, while it was withdrawn from entry and sale under the grant to the Northern Pacific Railroad Company by an order of the Secretary made in 1871 (Sjoli v. Dreschel, 90 Minn. 108, 95 N. W. 763), and the Supreme Court held that withdrawal void and disregarded it, as the law requires that the withdrawal and the suspension from entry of Jones' land before the railroad company's selection was approved by the Secretary shall be held and disregarded in the case at bar. The railroad company filed its selection of Sjoli's land in June, 1885, but it was rejected by the officers of the Land Department. Sjoli's application to enter the land upon which his patent was founded was not filed until 1895, and the Minnesota Supreme Court held that the Secretary ought to have approved the railroad company's selection, that as the company had done all in its power to secure the land its right to it was established by and dated from the filing of its selection, and that Sjoli's subsequent entry and patent gave him no right to or interest in it. But the Supreme Court held that the railroad company acquired no right to the land by filing its selection until that selection was approved by the Secretary, just as the law now requires that the selection of Jones' land, unapproved by the Secretary until after Jones entered and purchased it, shall be held to have initiated no right of the railway company thereto. The Supreme Court said:

Digitized by Google

"But, as already stated, the result of the cases in this court is that the railroad company did not acquire an interest in any particular lands within the indemnity limits merely by filing its lists of selections nor until its selections were approved by the Secretary of the Interior. * * * The company's unapproved selections did not therefore stand in the way of the lands being occupied and entered under the homestead laws. The mere filing of its lists of selections of indemnity lands did not have the effect to exclude them from occupancy under the pre-emption or homestead laws. On the contrary, notwithstanding the filing of such lists, they remained open, as before, to settlement or occupancy under those laws, until the selections were formally approved by the Secretary of the Interior and the lands withdrawn from settlement or sale. No such approval ever occurred." Sjoli v. Dreschel, 199 U. S. 564, 568, 26 Sup. Ct. 154, 156, 50 L. Ed. 311.

Counsel says that when the Supreme Court said that, "notwithstanding the filing of such lists, they remained open, as before, to settlement or occupancy under those laws, until the selections were formally approved by the Secretary of the Interior and the lands withdrawn from settlement or sale," it did not mean that the Secretary is without jurisdiction to approve a selection, because a settler under the pre-emption or homestead laws claims the land or files an application for it, but that its meaning was that in such a case the land is within the jurisdiction of the Land Department which may, if the facts warrant it, award it to the claimant under the settlement laws, and that a mere filing of a claim to such land under the latter laws does not deprive the Secretary of jurisdiction to approve the selection made by the railway company. Let that proposition be conceded. The question here is, not the jurisdiction, but the legality, of the decision of the Land Department and especially of the Secretary, its head, whereby he awarded this land to the railway company. The facts and the law warranted and require its award and sale to Jones. When he presented his application to purchase it under the timber and stone act, the railway company's selection of it was unapproved by the Secretary, and that company was without equitable right to it. The Land Department had jurisdiction to accept the application of Jones and to sell the land to him, or to approve the selection of the company and to award the land to it. It exercised this jurisdiction, accepted the application of Jones, permitted him to enter the land, to prove up his claim to it, sold it to him, took his $100 in payment for it, and issued to him his receiver's receipt, and did all this before the selection of the company was approved and before the company could acquire any right to the land. Jones' equitable title to the tract had then vested, and, while the jurisdiction of the Land Department continued until the patent issued, its power was neither arbitrary, unlimited, nor discretionary, and its action was subject to judicial correction for error of law, fraud, or clear mistake. The jurisdiction and power of disposition which the Land Department has of the lands of the United States, like the power of every other department of the government, is subject to the laws of the land, and the Land Department's violation or disregard of them is remediable in the courts. Its power "cannot be exercised so as to deprive any person of land lawfully entered and paid for. By such entry and payment the purchaser secures a vested interest in the property and a right to a patent therefor, and can no more be deprived of it by order of the commissioner than he can be deprived by such order of

Digitized by Google

any other lawfully acquired property. Any attempted deprivation in that way will be corrected whenever the matter is presented so that the judiciary can act upon it." Cornelius v. Kessel, 128 U. S. 456, 461, 9 Sup. Ct. 122, 32 L. Ed. 482; Germania Iron Co. v. James, 89 Fed. 811, 818, 32 C. C. A. 348, 354, 355; James v. Germania Iron Co., 46 C. C. A. 476, 481, 107 Fed. 597, 602; Black v. Jackson, 177 U. S. 349, 357, 20 Sup. Ct. 648, 44 L. Ed. 801; Orchard v. Alexander, 157 U. S. 372, 383, 15 Sup. Ct. 635, 39 L. Ed. 737; Brown v. Hitchcock, 173 U. S. 473, 478, 19 Sup. Ct. 485, 43 L. Ed. 772.

There is nothing in the opinion in Humbird v. Avery, 195 U. S. 480, 25 Sup. Ct. 123, 49 L. Ed. 286, inconsistent with the views which have been expressed. The Supreme Court held in that case that the lands there in controversy were subject to the provisions of Act July 1, 1898, 30 Stat. 597, 620, c. 546, and were still within the power of the Land Department, which had not then finally decided the questions properly before it concerning them, and hence that the suit was premature. Counsel for the defendants asserts, and the fact is conceded, that the land here in question is not subject to the act of 1898, and the Land Department had finally decided all questions regarding this tract that were before it and had issued a patent for it before this bill was exhibited.

Attention is called to an opinion of the Attorney General (25 Opinions of the Attorneys General, 632), in which may be found an intimation that the title of a railroad company, upon an approval by the Secretary after a sale of a tract of land to a purchaser under the general land laws, of its selection of it filed before such sale, relates back to the date of the grant and divests the right of the purchaser to the land. No other authority in support of that theory has been discovered. The decisions of the Supreme Court limit the right and title to indemnity land to the date of the approval of the selection, and, even if the theory could be sustained, its effect would be limited to lawful approvals, and the approval of the selection of this tract was illegal because the tract was not the property of the United States and was not open to selection by the company at the time of the approval.

Finally, counsel invokes the familiar rule that the decisions of officers of other departments of the government upon questions within their jurisdiction are cogent and persuasive and should be followed by the courts, unless they are clearly erroneous, and he reminds us that the Secretary of the Interior and the Commissioner of the General Land Office have carefully considered the questions in this case and have decided that Jones was without legal or equitable claim to this land, and that the right of the railway company to it was superior. But Jones was a qualified entryman. The attempted withdrawals and selections of the land by the Secretary prior to his approval of the company's selection were unauthorized by law and without legal effect. The land was open to entry and purchase until he approved the selection. Jones entered, bought, and paid for it before any such approval was made. And the decisions of the Supreme Court which have been cited leave no doubt that the Secretary and the Commissioner fell into a plain error of law when they took the land which Jones had lawfully purchased from him or from his grantees and gave it to the

Digitized by Google

railway company. Erroneous decisions of questions of law by the officers of the Land Department cannot be permitted to deprive the equitable owner of his vested right to lands which he has lawfully purchased from the United States. Johnson v. Towsley, 13 Wall. 72, 80, 20 L. Ed. 485; Gibson v. Chouteau, 13 Wall. 92, 102, 20 L. Ed. 534; Shepley v. Cowan, 91 U. S. 330, 340, 23 L. Ed. 424; Moore v. Robbins, 96 U. S. 530, 536, 24 L. Ed. 848; St. Paul R. R. Co. v. Winona Railroad, 112 U. S. 720, 733, 5 Sup. Ct. 334, 28 L. Ed. 872.

The conclusion is that by his entry and purchase Jones acquired the entire beneficial ownership and the equitable right to the land in controversy, and that the railway company and its successors in interest obtained nothing under the patent but the naked legal title, which they held in trust for him and for his successors in interest.

This conclusion renders the other questions presented in this case immaterial.

The decree must accordingly be reversed, and the case must be remanded to the court below, with directions to enter a decree for the complainant for the relief prayed in the bill.

It is so ordered.

(161 Fed. 332.)

CAMPBELL v. WEYERHAEUSER et al.

(Circuit Court of Appeals, Eighth Circuit. April 17, 1908.)

No. 2,638.

1. PUBLIC LANDS—PATENT—ONE NOT IN PRIVITY WITH THE UNITED STATES CANNOT MAINTAIN SUIT TO CHARGE TITLE UNDER WITH TRUST.

One who has never by acceptance of a grant, or by settlement and improvement, or by entry, or by payment, placed himself in privity with the United States in title before a patent issues to another, may not maintain a bill in equity to charge the title under it with a trust in his favor.

One, whose application to purchase is rejected when presented may not maintain such a suit.

2. SAME—NORTHERN PACIFIC LAND GRANT—ONE, WHOSE APPLICATION TO PURCHASE WAS DENIED WHEN PRESENTED, NOT A BENEFICIARY OF ACT JULY 1, 1898, c. 546, 30 STAT. 620.

The beneficiaries of Act July 1, 1898, c. 546, 30 Stat. 620, are purchasers directly from the United States of, occupants of, and qualified settlers upon, the lands there described prior to January 1, 1898, under some law of the United States or some ruling of the Interior Department.

One who had not purchased of the United States, or occupied, or settled upon, or acquired any equitable right to, or interest in, any of the land there described prior to January 1, 1898, but whose application to purchase had been rejected by the Land Department when presented, does not fall within the provisions of the act and cannot invoke its aid.

(Syllabus by the Court.)

Appeal from the Circuit Court of the United States for the District of Minnesota.

Herbert H. Hoyt, for appellant.

Charles W. Bunn, for appellees.

Before SANBORN and ADAMS, Circuit Judges, and PHILIPS, District Judge.

Digitized by Google

SANBORN, Circuit Judge. The nature of this case and the questions presented in it are the same as those in Hoyt v. Weyerhaeuser et al. (in which the opinion is filed herewith), 161 Fed. 324.[1] The facts of this case differ from the facts in that case in this: In Hoyt's Case his remote grantor, Jones, entered, purchased, and paid for his land in 1897 and 1898 under the timber and stone acts (Act June 3, 1878, c. 151, § 1, 20 Stat. 89, Act Aug. 4, 1898, c. 375, § 2, 27 Stat. 348 [2 U. S. Comp. St. 1901, pp. 1545, 1547]), before its selection by the railway company had been approved by the Secretary of the Interior. In this case the complainant, Campbell, repeatedly filed with the Land Department his application to enter the land which he claims under those acts prior to January 1, 1898, and before the railway company's selection of that land was approved by the Secretary of the Interior, but the officers of the Land Department rejected his application each time and refused to permit him to enter the land. In Hoyt's Case Jones became the vendee of the United States, paid for and became the equitable owner of his land. In this case, Campbell was refused permission to purchase the land he seeks, he never entered or paid for it, his right to buy it was never recognized by the United States, and he was never in privity with it. The difference is radical and fatal to this suit in equity.

One who has never by acceptance of a grant, or by settlement and improvement, or by occupation, or by entry, or by payment, placed himself in privity with the United States in title before a patent issues to another may not maintain a bill in equity to charge the title under the patent with a trust in his favor. Smelting Co. v. Kemp, 104 U. S. 636, 647, 26 L. Ed. 875; De Weese v. Reinhard, 10 C. C. A. 55, 59, 60, 61 Fed. 777, 781, 782; Hartman v. Warren, 22 C. C. A. 30, 36, 76 Fed. 157, 163; New Dunderberg Mining Co. v. Old, 79 Fed. 598, 606, 25 C. C. A. 116, 124; Spencer v. Lapsley, 20 How. 264, 269, 15 L. Ed. 902; Beard v. Federy, 3 Wall. 478, 493, 18 L. Ed. 88; McIntyre v. Roeschlaub (C. C.) 37 Fed. 556, 557. The indispensable basis of a suit in equity to charge the legal title to land under a patent is an equitable interest in the land in the complainant which is superior to the legal title in the defendant. The right under the general land laws of every qualified citizen to enter any tract of land open to entry thereunder is not, and no one can convert it into, such an interest in land by making an application to purchase which the officers of the Land Department unlawfully deny. The right to an allowance of such an application is a privilege merely, and not an equitable interest or title. The applicant acquires no equitable interest in the land by his application and its denial, and in the absence of such an interest no suit in equity can be maintained. Irreparable injury is conclusively presumed from the refusal of one to perform his contract to convey real property, and it is upon that ground that suits in equity to charge titles under patents with trusts for vendees and grantees are maintained; but there is no presumption of irreparable injury from the unlawful refusal of the government to sell land in which the applicant has secured no equitable interest, and hence such a refusal will not sustain a bill in equity. The applicant pays nothing for the tract he is re-

[1] 88 C. C. A. 404.

Digitized by Google

fused permission to buy, his loss by the refusal is measurable in damages, he may purchase another tract, and if courts of equity should entertain suits upon such applications and denials they would become courts for the production, rather than for the prevention, of a multiplicity of suits. In Smelting Co. v. Kemp, 104 U. S. 636, 647, 26 L. Ed. 875, the Supreme Court said that one who would maintain a suit in equity to charge a title under a patent with a trust in his favor must "connect himself with the original source of title so as to be able to aver that his rights are injuriously affected by the existence of the patent, and he must possess such equities as will control the legal title in the patentee's hands." The complainant in this suit made no such connection, and he had no equities of that character.

Counsel, however, urges another reason why his bill should be sustained. He claims that Campbell is entitled to the land under the provisions of Sundry Civil Act July 1, 1898, c. 546, 30 Stat. 597, 620; but the beneficiaries of that act are purchasers directly from the United States of, occupants of, and qualified settlers upon, the lands there described prior to January 1, 1898, under some law of the United States or some ruling of the Interior Department. The complainant was not a member of either of these classes. He had not purchased, or occupied, or settled upon, or acquired any equitable right to or interest in, the land in controversy prior to July 1, 1898, and he cannot successfully invoke the aid of the act of July 1st of that year.

There is no equity in the suit of the complainant, and the decree which dismissed his bill is affirmed.

(161 Fed. 334.)

CINCINNATI, N. O. & T. P. RY. CO. v. DAVIS.

(Circuit Court of Appeals, Sixth Circuit. May 14, 1908.)

No. 1,779.

RAILROADS—INJURY TO PERSON ON TRACK—LIABILITY UNDER TENNESSEE STATUTE.

Shannon's Code Tenn. §§ 1574, 1575, which require a railroad company to keep some one on the locomotive always on the lookout ahead, and if any person, animal, or other obstruction appears on the track to sound the whistle and employ every possible means to stop the train, and make a company which fails to observe such precautions responsible for all damages resulting from any accident or collision, as construed by the Supreme Court of the state, apply to the case of a train being backed on a passing track at a station while waiting for the passing of another train on the main track, and make the company liable for the injury of a person run over by such train, where, owing to its length, those in the engine could not see the track in front of the moving cars.

[Ed. Note.—For cases in point, see Cent. Dig. vol. 41, Railroads, §§ 1257-1266.]

In Error to the Circuit Court of the United States for the Eastern District of Tennessee.

R. M. Jones, for plaintiff in error.

H. Reed, Morrow & Waddle and J. C. J. Williams, for defendant in error.

Before LURTON, SEVERENS, and RICHARDS, Circuit Judges.

Digitized by Google

SEVERENS, Circuit Judge. This is an action brought by the plaintiff, suing by a next friend, to recover damages resulting from an injury caused by the negligence of the railway company in failing to keep a proper lookout and give the proper signals while moving one of its trains in its yard at a station on its road called Oneida. There was evidence at the trial tending to show, and from which the jury might have found, the following facts: The railroad at this place runs north and south. There were four tracks on the west side of the station house, the first and nearest of which was the main line. The second track was a passing track, that is, for the use of trains meeting and passing there. The third and fourth tracks were used for switching purposes in organizing or reorganizing trains. The train which injured the plaintiff was a freight train, which had some time before come into that station and had passed onto one of the switching tracks in order to let out or take in some cars. It had completed its work on the switching tracks, and had moved out upon the passing track where it had stood ready to go for half an hour or more before the accident. The engine was headed north; but it could not proceed because of other trains standing in front of it on the passing track. All these trains had been waiting for a passenger train to pass the station on the main line. The plaintiff, who was a boy eight years old, was returning to his home on the east side from the west side of the tracks on a path which had for many years been used by the public as a crossing. When he reached this freight train he found the rear end of it standing over the crossing and extending a little to the south. He turned out and went around the rear end, and while he was doing this the engineer suddenly and without warning commenced to back the train down to a switch at the south end of the yards leading onto the main track, from whence the train would take up its passage to the north. There was no lookout at the rear at the time the train was driven back, and the plaintiff was not seen. The plaintiff was struck by the rear car of the train and thrown upon the track, where both his feet were crushed by the wheels so badly that amputation became necessary.

At the conclusion of the evidence counsel for the railway company requested the court to instruct the jury that the plaintiff was not entitled to recover, and that they should find for the defendant. This the court refused, and the counsel for the defendant excepted. The verdict was for the plaintiff in the sum of $7,500, and judgment was given accordingly.

The case turns upon the construction and effect of a Tennessee statute imposing certain duties upon railway companies while operating their trains, and provides as follows:

"Every railroad company shall keep the engineer, fireman, or some other person upon the locomotive, always upon the lookout ahead; and when any person, animal, or other obstruction appears upon the road, the alarm whistle shall be sounded, the brakes put down and every possible means employed to stop the train and prevent an accident." Acts 1857-58, p. 54, c. 44, § 3; Shannon's Code, § 1574 (4).

"Every railroad company that fails to observe these precautions, or cause them to be observed by its agents and servants, shall be responsible for all

Digitized by Google

damages to persons or property occasioned by, or resulting from, any accident or collision that may occur." Shannon's Code, § 1575.

"No railway company that observes, or causes to be observed, these precautions shall be responsible for any damages done to person or property on its road. The proof that it has observed said precautions shall be upon the company." Shannon's Code, § 1576.

The precautions here mentioned were not complied with in this instance. If this statute is applicable to the facts of this case, the verdict and judgment were warranted. The trial judge held that it did apply, and so instructed the jury. If he was wrong, the judgment must be reversed. There is no other ground on which the case could have been taken from the jury. On its face the statute applies to all cases where the circumstances mentioned in the statute exist; but it has been construed by the Supreme Court of Tennessee as not extending to cases where a compliance with its provisions would be impossible or extremely difficult or embarrassing. In other words, that court has applied a well-known rule of statutory construction that it is to be presumed that a statute was not intended to apply to exceptional cases, when its application would be attended by such consequences. Accordingly it has been held that it does not apply to the operation of railways in switching yards; the reason being that in such places the individual cars or parts of trains are being constantly shifted about in various directions and hardly ever in one direction for any length of time, and it is necessary that some should be run upon the track a little distance, and often toward nearby places which a particular car is not intended to reach; in short, when the observance of the statute would paralyze the necessary operations in the switching yards, or embarrass them to such an extent as to make them impracticable. Railroad Co. v. Pugh, 95 Tenn. 419, 32 S. W. 311. In Southern Ry. Co. v. Simpson, 131 Fed. 705, 65 C. C. A. 563, a case coming here from Tennessee, where an engine was running backward with a tender in front, in the daytime, but the evidence tended to show that the engineer was on the lookout ahead and saw the vehicle in which the plaintiff was riding as soon as if the engine were running the other way, and he then performed the other requirements of the statute, we held the Tennessee law was complied with. The Tennessee cases were there fully considered in the opinion delivered by Judge Lurton, and there is no need to rehearse them now.

In the present instance there is no reason which would justify a disregard of the statute, or imposing upon it the limitation which has been found necessary in other conditions. This train had been on the switching tracks; but it had for some time been on the passing track, fully organized for proceeding on its trip. True, it had to go back to the switch before it proceeded on its main course; but its position was in no respect different from any passing train. The circumstance that it had some time before been in the switching yard was of no importance whatever. The Supreme Court of Tennessee holds that the statute applies to all moving trains, and that if the railway company disables itself from complying with it by pushing its train backward it is absolutely liable for the consequences of moving a train in this way, instead of so moving it that it could have been relieved

Digitized by Google

from liability for accidents by complying with the statute. In the Simpson Case, supra, though the engine was running backward the engineer was not deprived of the means of complying with the statute. Here there was a long train of cars in front, and those on the engine could not see the track on which the cars were moving. In Railroad Co. v. Dies, 98 Tenn. 655, 41 S. W. 860, the engine was running backward in the night with no headlight on the tender. The darkness of the night in that case, and the intervening train of cars in this, alike prevented the engineer from looking ahead.

The local law as construed by the highest state court furnishes the guide for the federal courts; and we think the court below gave the law to the jury correctly when it told them that the statute so construed applied to this case.

It is not important for us to consider the question of negligence on the part of the plaintiff, since by another statute of Tennessee the negligence of the plaintiff is not a bar, but goes only to the mitigation of the damages. The court instructed the jury upon that subject in a manner not now complained of. Our conclusion upon the principal question disposes of the case.

The judgment must be affirmed, with costs.

(161 Fed. 337.)

GORMLEY & JEFFERY TIRE CO. v. PENNSYLVANIA RUBBER CO.

(Circuit Court of Appeals, Third Circuit. April 1, 1908.)

No. 69.

PATENTS—INFRINGEMENT—RUBBER TIRES.

The Jeffrey patents, Nos. 454,115 and 558,956, for improvements in rubber tires, both narrowly construed as required by the prior art, *held* not infringed.

Appeal from the Circuit Court of the United States for the Western District of Pennsylvania.

For opinion below, see 155 Fed. 982.

Livingston Gifford, for appellant.

George H. Christy and J. C. Sturgeon, for appellee.

Before GRAY, Circuit Judge, and CROSS and HOLLAND, District Judges.

HOLLAND, District Judge. This case comes here on an appeal from a decree of the Circuit Court of the Western District of Pennsylvania dismissing the bill. In the court below infringement was charged as to four patents. On this appeal two of the patents are dropped, and the two relied on were granted to Thomas B. Jeffery for inventions in vehicle tires. The infringement is charged as to claims 1, 2, 3, 4, 5, and 6 of letters patent No. 454,115, issued June 16, 1891, on application filed March 26, 1891, and claims 5 and 10 of letters patent No. 558,956, issued April 28, 1896, on application filed April 3, 1891. In the opinion of the Circuit Court, reported in 155 Fed. 982, it was held that infringement was not proven, for which reason the

Digitized by Google

bill was dismissed. Rubber tires have been used on vehicles for a number of years, particularly upon bicycles, and at first were solid and attached to the rim of the wheel by various devices. Improvements in the art followed rapidly, both as to the construction of the tire and the mode of adjustment, so that by the time they had advanced from bicycles to automobiles the art had progressed from the solid to the cushion, and thence to the pneumatic form. Patents were issued for each of these improvements, both as to the construction of the tire and the mode of attachment.

First. The oldest and most obvious form was the solid tire consisting of mere hoops or bands of rubber, with some means of attachment, such as screws or bolts. Then was introduced the tube extending through the inside of the rubber tire so as to give it more elasticity, and was called a "cushion" tire. In still others this tube was filled with compressed air to still further increase the elasticity, and these were called "pneumatic" tires. They were attached to the rim of the wheel by bolts, diverging flanges or ears, wire bindings, and sometimes by cement. But however attached, and whether the tire itself was solid or cushion or pneumatic, it invariably, in this stage of the art, was completely formed and self-sustaining both before attachment to and after detachment from the wheel; and in every case the means of attachment, whether bolts, ears, wires, or cement, was a mere addition to the complete tire, performing no function in resisting any strain from within the tire. Up to this time they contained no sheath, but every advance was patented, both as to construction and mode of attachment. Next was developed the tire containing a sheath, which is not made up until attached to the wheel, and in which the wheel rim and sheath together form a girdle to restrain the tube from bursting. The Dunlop was the progenitor of this class, and was patented in England March 8, 1889, and in the United States (No. 435,995) on September 9, 1890, upon an application filed March 11, 1890. It is referred to in the first patent in suit, to wit, No. 454,115, descriptively as "a tire having a core composed of elastically expansible tube, which is inflated by air or gas and distended thereby to some extent, the air or gas being under such tension that but for a restraining or enclosing sheath such core would be liable to burst." The claim in Dunlop's patent is as follows:

"In hollow air-inflated wheel-tires for cycles and other vehicles, the combination, with an inner expansible tube and outer protective covering of strengthening folds or layers of cloth, canvas, or linen, and protective strips of caoutchouc interposed between the edges of the rim and strengthening fold or layer, substantially as and for the purposes herein set forth."

Beside this, there is one other patent of importance in considering the state of the art in connection with the questions at issue. This patent was issued in England to Golding on December 8, 1890, and in the United States (No. 493,160) on March 7, 1893, on an application which had been filed October 6, 1891. It was for an improvement in rubber tires and rims for velocipedes, and other light carriages. We find from the specifications that:

"The edges of the rim are bent round and brought a short distance toward each other and nearly parallel to the flat surface of the rim, thus forming an

Digitized by Google

inner recess or groove along the rim on both sides, suitable for holding the projecting flanges of the tire."

The tire contained a corresponding lateral flange, which was inserted into this recess and secured by the pressure of the compressed air when the tire was inflated.

Claim 1 is as follows:

"The combination with a metallic wheel rim having lateral recesses formed by reflexing the edges, of an inflatable tire having corresponding lateral flanges which are detachably inserted into such recesses, and are secured therein by the pressure of the contained compressed air when the tire is inflated substantially as hereinbefore set forth."

Claim 3 shows that Golding used a sheath and an inner inflatable tube. This patent was purchased by the appellant soon after it was issued, and owned by it down to the time it expired.

The first Jefferey patent in suit, No. 454,115, is for an improvement in wheel tires, and "is designed to provide improved means for protecting a rubber wheel tire, and is particularly designed and adopted for an inflation tire; that is to say, a tire having a core composed of an elastically expansible tube, which is inflated by air or gas and distended thereby to some extent, the air or gas being under such tension that but for a restraining or inclosing sheath such core would be liable to burst." The inflated core or elastically expansible tube, encased in a restraining sheath, of the Dunlop patent, is the same in the Jefferey patent. The improvement of the latter, among other things, over the Dunlop, extends to the device for attaching the tire to the rim of the wheel. This, in the description, we find is a "rim" provided with hooked edges. "The hooks may be turned either inward or outward. * * * The tire-sheath is provided with correspondingly hooked edges. * * * Ordinarily the entire sheath will be made of canvas or similar woven fabric comparatively inelastic, and, in that event, the hooked edges will be stiffened with caoutchouc or india rubber, or they may be vulcanized if the sheath is made of suitable substance to endure the temperature. * * * On some accounts the hooks on the rim are preferably turned outward, chiefly because the center of the body or inflatable core is thereby rendered free from the irregularity which the hooks form when they are turned inward. On the other hand, the liability of the sheath hooks to be pulled out from the rim hooks by the expansive tendency of the core when inflated is somewhat less when the hooks are turned inward; but practically the two methods are about equally desirable." In either case it should be observed that the hook is open toward the axis, and it is preferably approximately in the direction of a tangent to the inflatable core, so that the expansible tendency of the core will tend to draw the hooks into close engagement.

This improvement in the attachable device, which the patentee has designated "hooked edges," both on the rim and on the tire, is variously stated in claims 1, 2, 3, 4, 5, and 6, which claims the defendant is charged with infringing. They are as follows:

"1. In combination with the rim having recesses open toward the axis of the wheel, the tire-sheath having its edges reversed and engaged in such re-

Digitized by Google

cesses, and the elastic expansible core between the rim and sheath, substantially as set forth.

"2. In combination with the rim having hooked lateral edges, the tire-sheath transversely flexible and having hooked edges which detachably engage the hooked edges of the rim, substantially as set forth.

"3. In combination with the flexible tire-sheath having rigid hooked edges, the rim having hooked edges to engage those of the sheath, substantially as set forth.

"4. In combination with an inflatable core, the rim in which such core is seated, having its edges reversed to form hooked flanges approximately tangential to the core, and the flexible sheath for such core, having its edges engaged in such hooked flanges, substantially as set forth.

"5. In combination with the rim having hooked lateral edges, the flexible sheath and rigid strips about which the lateral edges of the sheath are wrapped inserted with the enwrapping-sheath edges within the hooks at the edges of the rim, substantially as set forth.

"6. In combination with the rim having hooked lateral edges, the flexible sheath and rigid strips about which the lateral edges of the sheath are wrapped, such strips being folded with the enwrapping sheath to form rigid hooks at the edges of such sheath, such hooks being engaged with the hooks at the edges of the rim, substantially as set forth."

It will be seen that the attachable device in this patent is the "hooked connection" of the sheath and tire edges. The patentee says "the rim is provided with hooked edges," and, as said by the court below, these hooks on the rim are "doubled back U-shaped, so as to form recesses and permit engagement in such recesses of corresponding hook points on the hooks of the sheath." This hook is open toward the axis, and is "preferably approximately in the direction of a tangent to the inflatable core so that the expansible tendency of the core will tend to draw the hooks into close engagement." The complainant never manufactured tires with the attachable device described in its patent No. 454,115. It was found to be, to say the least, an objectionable means of attachment, and no tires were manufactured as therein described; but the complainant modified its form of attachment by changing the device from a hook, with its opening toward the axis, to a projection of the rim more nearly parallel to the flat surface of the rim, and changed the angle of the hook on the tire more nearly to that of a flange to correspond with the tire. This is the form of the appellee's device, and, if the hook-shaped attachment described and claimed in appellant's patent No. 454,115 includes the form appellant has used down to the present time, then the appellee has infringed, because the latter is using the same kind of attachable device used by appellant, but the appellee claims both are using the device described in the Golding patent, which has expired and was public property before appellee began to use it. When Jefferey patented his hooked device set forth in No. 454,115, the field had been well covered, and, if he had made his claim sufficiently broad to include "an extension of a rim partly or nearly parallel with the flat portion of the wheel with the flange on the tire to correspond, such as both parties here are using, he would have invaded the domain pre-empted by the Golding patent, of which the "edges of the rims are bent round and brought a short distance toward each other and nearly parallel to the flat surface of the rim, thus forming an inner recess * * * for holding the projecting flanges of the tire. * * * The tire is

Digitized by Google

made to fit the rim rather tight * * * and the flanges spring into the recesses." So that the Jefferey patent can only be sustained by a construction restricting it within the narrow limits of the hooked device which "opens toward the axis," and cannot be extended to a flange "nearly parallel to the flat surface of the rim," and, so construed, it is not infringed. It will, therefore, be unnecessary to consider the question of the patentability of Jefferey's improvement.

The conclusion of the court below that the second patent No. 558,956 was not infringed we also think is correct, and we cannot do better than to quote the language there used:

"The second patent is No. 558,956, issued April 28, 1896, for a wheel tire. claims 5 and 10 of which are alleged to be infringed. Respondent defends on the ground of noninfringement. We are of the opinion the defense is sustained. The subject-matter of this patent, its late date in the art, and the close differentiations required to obtain the narrowly limited claims in question indicate the patent was restricted to a comparatively narrow field of improvement. The specification states: 'This invention relates to tires having inflatable cores; and it consists in the character and construction of the inclosing sheath and the mode of securing the same to the rim.' The character and construction of the proposed sheath are specifically shown. No novelty was suggested in the rim. Its construction for the broader type of the device is: 'The rim is a hollow rim made in a familiar manner from tubing * * * having the outer side transversely concave to form a seat for the tire.' A. special form is suggested: 'For the purpose of adapting it to receive my improved tire the rim is preferably formed with the peripheral channels, A–1, A–1, in the outer or concave wall; but these are not essential to my invention considered in its broadest phase. Their use, when present, will appear from the further description.' The lateral portions of the sheath the patentee made of folded canvas or other web, joined at the folded edges to thread or rubber of sufficient thickness to stand wear and 'sufficient elastic flexibility to adapt it to yield with the core, and having also tensile elasticity. So that the sheath which comprises it as the middle section is transversely extensible to a slight degree.' The purpose of this extensibility was to adapt the sheath for use with either an inflatable or a nonextensible core. At the outer end of the folded canvas, hooks or buttons were placed and in the rim at corresponding distances were put engaging eyelet holes or buttons; 'said eyelet-holes or button-holes being formed in the channels, A–1, when the rim is made with such channels.' When the core is inflated, 'its tension being exerted in all directions tend to draw the hooks securely into the respective holes in the rim and effectually prevent dislodgment.' Of this button connection, which the patentee evidently regarded as the substantial feature, 'in the character and construction of the inclosing sheath and the mode of securing the same to the rim,' he says: 'The use of the buttons or hooks, in lieu of any continuous fastenings, affords the advantage of detachability for short distances without detaching the entire edge or even any large section of the edge, and as compared with familiar devices, such as continuous lacing, it affords a similar advantage that the fastening need not even be relaxed or slackened anywhere except at a point where it is desired to completely detach in order to get full access to the core.' To make the fastening still more secure the patentee suggested an additional element, which it will be noted forms an element in the claims here in controversy. It is thus described: 'It is not a necessity that the lateral pieces, C'—that is, the canvas or web sides—'terminate at their lines of reinforcement or attachment to the rim, and, on the contrary, one or both of them might be extended farther under the inflatable core, so as to rest between said core and the rim and form a lining for the seat of the core in the rim; and such extension adapts the sheath to be held more firmly in its place by the inflation of the core, and such inflation, holding the inwardly extended edge of the sheath firmly seated between the core and the rim, keeps the beads formed by the cord, c'—an alternative construction of strengthening cord placed in the folded edges of the web—'in the grooves or channels, A–1, of the

Digitized by Google

rim and makes them assist materially in holding the sheath from spreading when the core is inflated.'

"The limited side type is described in claim 2, which reads as follows: 'The rim and an inflatable core combined with an envelop or sheath for the core parted under the core and fastened to the rim at two peripheral lines, one on each side of the plane of parting, and detachable from the rim at one of the said lines of fastening; said sheath having its lateral portions flexible, but not laterally extensible, and its middle portion, including the thread, elastically extensible; substantially as set forth.' And the extended side in claim 5, which is for: 'The rim and an inflatable core combined with an envelop comprising a thread of cushioning substance and lateral portions composed of textile fabric which are joined to the rim at two peripheral lines, and extend inwardly from said lines underneath the core between the same and the rim in the plane of the pressure radial with respect to the wheel, which is experienced by the thread and exerted by the inflation of the core; whereby the tension of the air in the core due to inflation and to the pressure of the load operates on said inwardly-extending fabric portions of the sheath to hold them seated in the rim; substantially as set forth.' And in claim 10, which is for 'in combination with the rim having peripheral grooves, in the tire seat, the inflatable core and envelop for the same rifted at the inner side to admit the core to permit its removal, and comprising a thread of cushioning substance, and lateral portions which are provided respectively with beads adapted to engage the grooves of the rim, and extending inward from said beads to the rift; whereby the inflation of the core presses such inwardly extending marginal portions of the sheath against the rim between the planes of the beads; substantially as set forth.'

"In the respondent's device, however, the sheath ends with its two peripheral side connections with the rim. No theory or ingenuous contention can change that fact; and fact, not theory, is the test of infringement. Accordingly we hold respondent does not infringe."

The decree is affirmed, with costs.

Digitized by Google

(161 Fed. 481.)

THE HENRY O. BARRETT.

THE JAMES McCAULLEY et al.

(Circuit Court of Appeals, Third Circuit. May 8, 1908.)

No. 21.

1. COLLISION—CONFLICTING EVIDENCE—PROPER MANNING OF VESSEL.
Where there is a conflict of testimony as to whether one or the other of two vessels brought about a collision by negligent navigation, it is proper to consider the manner in which each was manned at the time.

2. SAME—TOW AND ANCHORED DREDGE—NEGLIGENCE OF TUG.
A heavily laden schooner being towed down the Delaware river at night on a hawser 80 fathoms long came into collision with a dredge engaged in dredging the new channel, and anchored between that and the old channel. The dredge was properly lighted, indicating that vessels should pass to the eastward through the old channel. There was a direct conflict of evidence as to whether the tug or tow was in fault; the tug claiming that she kept a course directly toward the dredge until within a mile, and then sheered to the eastward, and the schooner, failing to follow, gave her three several signals with her whistle, each time taking a course more to the eastward, until she was headed directly toward the New Jersey shore. The schooner claimed that the tug was on a course to the westward of the dredge until the schooner was within 700 or 800 feet, when she sheered directly across the channel and signaled, and that the schooner at once starboarded her wheel, but was unable to turn in the short distance. *Held* that, taking into consideration that the schooner was fully manned by experienced and competent seamen all of whom were fresh at the time, with a lookout, and that the navigation of the tug was, or at least had been up to immediately before the collision, in charge of an unlicensed deck hand, and that she had no lookout, the story of the schooner was the more probable, and, as it was corroborated to some extent by the watchman on the dredge, the tug would be held solely in fault.

Appeal from the District Court of the United States for the Eastern District of Pennsylvania.

Theodore M. Etting for American Dredging Company.

Edward F. Pugh and Edward S. Dodge, for schooner Henry D. Barrett.

F. C. Adler and John F. Lewis, for tug James McCaulley.

Before DALLAS, GRAY, and BUFFINGTON, Circuit Judges.

BUFFINGTON, Circuit Judge. On April 2, 1903, the schooner Henry O. Barrett, while being towed down the Delaware river by the tug James McCaulley, collided with and injured the anchored dredge Columbia. Thereupon the Columbia libeled the schooner. The schooner under the fifty-ninth rule petitioned to bring in the tug, and filed a libel against the tug and dredge. From both decrees, the Barrett appealed.

That schooner, en route from Philadelphia to Boston, carrying 2,800 tons of coal and drawing 24 feet, was being towed down the Delaware by the tug on an 80-fathom hawser. The time of the collision was shortly after 4 a. m. The night was dark, but lights were plainly visible. The tide was falling; it being about one-third ebb. The dredge was anchored at a point known as "Dan Baker shoals," where she had

Digitized by Google

been dredging a new channel. This new channel was almost, but not wholly, completed, and the dredge anchored on its eastern, and the old channel's western, side, and displayed a white anchor light and four red danger lights, in accordance with the regulations of December 4, 1905, prescribed by the Secretary of War for the Delaware river, as follows:

"(2) Vessels using the channel shall pass the dredges on the side designated from the dredge by the signals prescribed in paragraph 7 of these regulations."
"(7) Dredges shall display by night one white light on a staff in the middle of the dredge and at least thirty (30) feet above the water, to serve as the regulation anchor light, and four (4) red lights suspended in a vertical line from the outer end of the horizontal spar used by day for the suspension of the black ball, the lights to be set on the side of the dredge on which it is desired approaching vessels shall pass."

The dredge displayed another white light forward, but the District Court found, and we concur in that view, such light misled no one, and did not contribute to the accident. We also find the dredge rightly selected the old or eastern channel as the proper one for approaching vessels, and correctly marked that route by four vertical red lights. Being anchored properly, lighted, and without fault, the burden is on a striking vessel to exculpate itself. Consequently the controversy in this case has narrowed to one between the tug and her tow. The tug's explanation of the accident is that, seeing the lights of the dredge some two miles away, she bore down on them until within a mile distant, when she veered to pass to the eastward; that the schooner failed to follow her, whereupon she blew to her; that the schooner still failed to follow, whereupon the tug steered more to the east and blew again; that the schooner still failed to follow, whereupon the tug blew again a second and a third time, sheering off each time more to the east, whereupon the tug sheered off at practically right angles and blew again, but the schooner failed to respond, went straight ahead, and struck the dredge. The story of the schooner is that the tug headed slightly to the westward of the dredge lights until the schooner was about 700 or 800 feet distant from the dredge, when the tug took a sharp sheer to the eastward; that the schooner at once did everything possible to follow, starboarded her wheel, followed at once by hard astarboard; that the first whistle from the tug was when she was making this sheer; that, owing to the shortness of time and distance, the schooner was able to sheer but a little to the east, and struck the dredge through the fault of the tug. There is the usual conflict of testimony, and the ascertainment of the truth lies in a due regard, not only to the proofs, but to all the surrounding facts and circumstances.

The gist of this case lies in this: Whether the tug began her maneuver to the eastward soon enough, and whether the schooner failed to follow her. Now, the mistake of the tug in beginning her sheer, if mistake is shown, was one of misjudgment, while that of the schooner in failing to heed her warnings and follow was one of gross neglect. The question, therefore, is: Does the case point to a mistaken judgment of the tug or a gross disregard of duty by the schooner? In view of this the manning of the two crafts becomes important, for a due regard by a vessel in placing enough and capable men in the place

Digitized by Google

of duty raises a presumption of vigilance and care in performance, while an insufficient or incompetent manning shows a disregard or indifference to those factors on which the safety of vessels depends. Thus in The Charles L. Jeffrey, 55 Fed. 686, 5 C. C. A. 247, it was said:

"Everything about this vessel indicates a reasonable degree of vigilance; so that the probability that she complied with her duty under the law is prima facie established."

Now, in this case the schooner was fully manned. She was in charge of her mate who carried a master's license for all oceans, and whose oversight of the vessel was unhampered by other duties. She had as lookout a seaman of 11 years' experience. The wheel was in charge of a seaman of 10 years' experience. In addition to these, an extra seaman was on watch, who was not assigned to any particular duty. In view of the presence of these men, of the fact they were all fresh on watch, it does not seem probable that each of them would have lost sight for five minutes of the tug's lights sheering to the eastward, and have also ignored three sets of whistle warnings from her. To make this more probable, it is contended by the tug the schooner mistook the lights on the dredge for those of the tug. This theory of confusion of lights is based on the alleged admission of one man, the mate, but we think such confusion highly improbable, if not, indeed, impossible. The proof is that to the eastward of the white anchor light of the dredge were the four vertical red lights, so unusual a display in position and number that experienced seamen on the schooner admit that, other than indicating danger, they did not know what they meant. It is conceded by all hands the night was such that lights were plainly visible. Taking the dredge's lights for those of the tug would therefore involve the extraordinary fact that the tug had suddenly displayed four red vertical lights. Whatever credence might at first thought be given to the contention that the anchor light of the dredge might have been confounded with the towing light of the tug, it would seem clear that the presence of these four vertical red lights alongside would at once show those on the schooner that the cluster of different colored lights on the dredge were not those of the tug. But a study of the proofs satisfies us that the contention is not even supported by the weight of the proofs. The captain of the tug was asked: "How do you account for the collision, Captain?" and replied, "Why, they in charge of the schooner took the machine's lights for the tug's. There is no other way that I see." He was then asked: "Is that what the mate of the schooner told you he did?" and said: "That is what the mate of the schooner told Mr. Herron, that he had mistaken the dredge's lights for the tug's lights." This was followed by the testimony of Hornung, a deck hand on the tug, who says he heard the talk between the schooner's captain and Herron just after the collision:

"Well, Capt. Herron asked the captain of the schooner, 'What the trouble was, what was the matter, couldn't you see our lights?' and the captain says, 'I don't know nothing about it.' He says: 'I was below, but my mate was on watch'—and he referred to the mate, and the mate says— He didn't say anything, he meandered around, and he said: 'Yes; I took the machine's lights for the towboat's lights.' That is all the mate of the schooner says."

Digitized by Google

Herron says:

"I asked him [the mate] what he was trying to do. The mate of the schooner said he mistook the lights of the dredge for the tow's lights."

This alleged conversation was utterly denied by the captain and the mate, both of whom, as well as Smith, the lookout, Jorgansen, the wheelman, and Smith, the extra seaman, all testify they saw both the lights of the tug and the cluster of red and white lights on the dredge. Moreover, it is not without much significance that this alleged confusion of lights by the schooner was neither averred by the dredge in its libel, though Herron was connected with that company, or by the tug, though the witness Collins was its master. Had these witnesses then understood the mate of the schooner to have made such a statement in the presence of her captain, a statement which the tug captain says is the only explanation of the accident, it would naturally have been charged against the schooner in the pleadings. Its absence corroborates the testimony of the schooner's witnesses, not only that no such conversation took place, but that the clustered red and white lights on the dredge were seen by the schooner's lookout, and were not confounded with the white lights of the tug. The fact, then, being that the schooner did not mistake the lights but was following the light on the tug, and the testimony of five men on the schooner being that, as soon as the tug changed her course, the schooner's wheel was at once put to starboard, the case resolves itself into the question, at what point did the tug sheer to the eastward? She says a mile away. The schooner says about 700 or 800 feet. The tug says she whistled at intervals during a gradual and greater series of sheers. The schooner says the whistling was when the tug was making her first and only sheer. At this point the manning of the tug becomes an element. Now, in fact, the tug had no lookout, and the wheelsman, whom there is evidence tending to show was standing the mate's watch, was an unlicensed deck hand. It is urged the absence of a lookout is not material, because in point of fact the deck hand, who was at the wheel, saw the dredge's lights in ample time; and that the latter was an unlicensed man is immaterial because the captain himself was on watch, and directing the movement of the tug. But it will be observed it is by no means certain that the captain of the tug, and not the deck hand, was in charge of the watch. The master of the schooner proved the declaration of the tug captain that he had just come on deck. He says that, just after the collision, the tug came up to the schooner, and, being asked about the collision, "I said that I had just come on deck a minute before we struck the dredge, and the captain of the tug says that he had just come on deck too"—a statement which the captain of the tug did not deny when he came on the stand. Of course, if the testimony elsewhere of the tug's captain is true—that he was in charge—the fact that an unlicensed man was at the wheel is of no special significance, but the assumption of responsibility by the captain, while seemingly disengenuous, is in reality self-exculpatory, for it tends to relieve him from a blameworthy course, which up to that time he had been

Digitized by Google

pursuing that night of having the mate's watch in charge of an unlicensed man. This practice of an unlicensed watch which the captain had been pursuing that night and for a month past was in violation of Rev. St. § 4438 (U. S. Comp. St. 1901, p. 3034), and evidences not only his disregard of due safeguards, but also the necessity of self-exculpatory proof on his part. "The failure to comply with statutory requirements and regulations has frequently received the severest condemnation of the courts, and, when such an omission is clearly established, the presumption is that it did contribute to the collision, unless the contrary is obviously apparent, and this presumption attends every fault connected with the occurrence, and a further obligation is imposed to show, not only that it probably did not so contribute, but that it could not have done so," The Eagle Wing (D. C.) 135 Fed. 832. This self-exculpatory evidence is therefore to be closely scrutinized, for, as was well said by Judge Butler of this circuit in The John H. May (D. C.) 52 Fed. 882:

"These witnesses are interested. Swearing to exculpate themselves. I have yet to meet with an instance of collision where witnesses from the vessel in fault did not testify to a faithful discharge of their duties, and to the faultlessness of their vessel."

And, in any view, the lack of mate and lookout on this tug shows such a disregard of those legal requirements conducive to safety that a corresponding lack of that alert vigilance which a tug controlling the movement of a tow is bound to exercise is a not unlikely sequence. The schooner was of deep draught, was moving with the tide, was liable to be towed into shallower water, and the answer to her helm might be eccentric. The evidence of the wheelman does not show that these factors of uncertainty had due regard by him in determining the start of the tug's sheer. Now, the evidence of the witnesses on both sides shows that a point from a quarter to a half mile from the dredge was a proper distance to begin such sheer. That the captain and mate, without any reason for this departure from the usual course of pilots, agree the tug began its sheer a mile away, rather indicates they are proving too much; and it will be observed that, if such is the case, it is incredible that in the mile and from six to ten minutes which elapsed before the collision they were not able to make those on the schooner steer to the eastward of the dredge, for it will be observed that, on the tug's own contention that the schooner did not starboard her helm until just before the collision, even that short a time was sufficient for her to avoid a head-on blow. But the evidence satisfies us that the tug delayed her sheer too long. The schooner's witnesses prove the tug was heading slightly to the west of the dredge when she took a sudden sheer to the eastward, that the schooner tried to follow, and it was on this sheer the tug's whistle was first blown. Martin, the watchman of the dredge, was amidships when he first heard the tug whistle. He heard her blow twice, looked up, and she was then abreast the dredge with her stern pointed towards her. Martin at once blew the dredge's whistle and sang out. Now, if the tug's story is cor-

Digitized by Google

rect, that she had blown her whistle several times before, t
no reason why the attention of the dredge's watchman w
sooner attracted. That it was not is conceded by the dredg
swer, viz.:

"When the tug was first sighted by the dredge she was to the east
the dredge and clear of her; the schooner was astern of the dredg
course of the two vessels was at right angles to each other. The resp
servants heard the tug's whistle to her tow and the respondent's ves
wise whistled in order to call the schooner's attention to the whereal
the dredge."

Martin's testimony strongly corroborates the schooner's me
fix the first whistle as made on the tug's sheer when she was a
angles to the dredge. Thus Stuart, the schooner's mate, says

"Q. Did you hear any whistles by the tugboat?
"A. I did, sir.
"Q. One whistle or several blasts?
"A. Several short blasts, toots.
"Q. How many sets of blasts did you hear?
"A. I could only distinguish one, sir.
"Q. When was that?
"A. Just before the collision.
"Q. Well, when was it with respect to the time you gave the ord
to starboard?
"A. It was almost at the same time, sir. * * *
"Q. How many sets of blasts did you hear from the dredge?
"A. One. * * *
"Q. And at the time you heard that set from the dredge the tugb
well off to the eastward, was she?
"A. Yes, sir.
"Q. On your port bow?
"A. Yes, sir; on our port bow."

Smith, the schooner's lookout, says:

"Q. Did you hear any whistles from the tugboat?
"A. Yes, sir.
"Q. Were they before or after the mate gave the order hard to sta
"A. They were just about the same time as he gave the order, ju
when he sang out.
"Q. How many blasts were there, if you remember?
"A. I can't say, sir.
"Q. You don't know how many toots?
"A. No, sir.
"Q. Well, were there one set of blasts or more?
"A. One.
"Q. Did you hear any whistles from the dredge?
"A. Yes. sir.
"Q. When was that?
"A. Just when we struck the dredge."

The account of Jorgansen, the wheelman, is:

"Q. Then you had starboarded your wheel before the mate gave t
to starboard?
"A. Yes, sir.
"Q. Did the mate give you any other order after the order to starbo
"A. No, sir; he didn't give me any other order before the tug b
whistles; at least, it was the same time when the tug blew."

Digitized by Google

Cullendar, the steward, said:

"Q. Did you hear any whistles blown by the dredge on the morning of this collision?
"A. Yes, sir.
"Q. How many times did the dredge whistle?
"A. I only heard it once.
"Q. How many times did you hear whistles from the tugboat?
"A. Once.
"Q. How soon after the tugboat blew her whistle did you hear the dredge whistle?
"A. Very shortly."

The testimony of the schooner's captain who came on deck just before the collision was:

"Q. Captain, you said you heard whistles from the McCaulley?
"A. I heard a whistle as I came out.
"Q. Did you hear whistles more than once?
"A. I think I did.
"Q. How many times?
"A. I would not be sure whether I did or not. I think I heard some from the tug and some from the dredge; but I could not distinguish them apart.
"Q. How many times did you hear whistles blown before you came out on deck?
"A. I think once or twice.
"Q. What kind of whistles were they?
"A. Kind of short toots.
"Q. Are they what is generally known among seafaring people as 'attention whistles'?
"A. They are just what little tugboats use just when they are going across the bow. They give whistles to get out of the way.
"Q. How many blasts are blown in succession?
"A. Two or three,
"Q. They are what are generally known among seafaring people as short whistles?
"A. Yes, sir.
"Q. As I understand, you can't say now whether you heard those whistles once or twice?
"A. No, sir; I do not know whether I heard several short blasts once or twice.
"Q. That is before you got on deck?
"A. Yes. sir.
"Q. What is your best recollection whether you heard them once or twice?
"A. I said that I heard them once or twice. I heard some toots, and that is all I can say about it. Whether they were two sets I don't remember.
"Q. How long were they apart?
"A. Just 'toot,' 'toot,' like that.
"Q. How long were the different sets of toots apart?
"A. I could not say, as I can't swear that I heard more than one. Everything happened so quick that it all seemed to happen right together."

Now, this testimony, as we said, is corroborated by that of Martin, its watchman, who was called by the dredge:

"My attention was drawn to the whistle of this boat McCaulley, the tugboat.
"Q. Where was she when she whistled?
"A. She was about abreast of the machine to the eastward.
"Q. How far to the eastward do you think she was, and how far?
"A. 200 or 300 feet probably.
"Q. Was she presenting her side to you or stern?
"A. The stern to the dredge, heading toward Jersey; to the eastward, I suppose you would term that.
"Q. Where was the schooner?

Digitized by Google

"A. The schooner was astern of the dredge bearing down on the dredge, showing both side lights.

"Q. What did you do?

"A. I commenced to blow whistles, to blow the dredge's whistles to draw their attention; and also hollowed. * * *

"Q. What was it attracted your attention to the tugboat?

"A. I heard the whistle blowing.

"Q. What position was she from you—about opposite your stern to the eastward?

"A. Yes, I judge so, heading for the Jersey shore to the eastward. * * *

"Q. And nothing attracted your attention until you saw the tug sharp off to the eastward?

"A. No, sir; that drew my attention, hearing those whistles. I knew there was something approaching."

Now, while the tug's witnesses place the whistles away back on the course, the testimony of Martin is in accord wtih those on the schooner, that the tug whistled first when she was making the sharp sheer to the east and when she was abreast the dredge. We are satisfied that the tug, instead of beginning the sheer a mile away, began it when it was too late for the schooner to avoid the dredge, and that, after she began the maneuver, the schooner did all in her power to follow her. Her duty was to follow the tug, and, having done all in her power to do so, she fulfilled her duty.

After a careful examination of all the testimony, we are clear in the opinion that the cause of this collision was the improper delay of the tug in starting to sheer to the east of the dredge. The decrees of the court below must therefore be reversed, and the case remanded, with directions to dismiss the libel filed by the dredge against the schooner, and to enter a decree in favor of the dredge against the tug, and in favor of the schooner on the schooner's libel, one-half of all the schooner's costs to be taxed on each bill.

(161 Fed. 488.)

NORTHWESTERN NAT. LIFE INS. CO. OF MINNEAPOLIS, MINN., v. GRAY.

GRAY v. NORTHWESTERN NAT. LIFE INS. CO. OF MINNEAPOLIS, MINN.

(Circuit Court of Appeals, Eighth Circuit. April 27, 1908.)

Nos. 2,662, 2,672.

1. INSURANCE—REINSURANCE BY LIFE COMPANY—RIGHTS OF POLICY HOLDER.
A contract of reinsurance between two life insurance companies, by which one transfers all of its assets to the other and ceases business, thus disabling itself from performing its executory contracts with its policy holders, while the other assumes such contracts on terms agreed upon, is not binding upon such policy holders, in whose favor a right of action at once arises against their own company for breach of contract. Such a policy holder is, however, put to his election, and if he accepts the reinsurance offered he is bound by the terms of the contract between the two companies.

[Ed. Note.—For cases in point, see Cent. Dig. vol. 28, Insurance, § 1807.]

2. SAME—ELECTION—ACCEPTANCE OF POLICY FROM REINSURING COMPANY.
Defendant, a life insurance company on the fixed premium plan, took over the assets of an assessment company under a contract by which

Digitized by Google

it assumed all the liabilities of the other company, but subject to the provisions of its own articles of incorporation and by-laws, as they then existed or as they might thereafter be amended. It thereupon amended its by-laws, as affecting policies or certificates assumed, by providing that "the premium to be paid thereon by the insured shall be the single premium according to the life expectancy or single premium rate table adopted by the company at the attained age of the insured at the time of issuing or assuming such policy, * * * which single premium may be paid in any installments agreed upon or fixed by the board of directors. * * * Any excess thereof [interest], being in payment and extinguishment of the principal amount of said lien, and in the event of the death of the insured occurring at any time before a sum equal to the single premium as aforesaid, with 4½ per cent. interest per annum in advance from the date of such assumption, shall be paid in cash to this company, there shall be reserved from the face of such certificate or policy, and charged as a lien thereon, a sum equal to the unpaid portion of such single premium and interest." Plaintiff was the holder of a certificate of the reinsured company, and received from defendant a notice of the reinsurance, a copy of such by-law, and a new policy, with a statement of the amount of the lien thereon, and giving him the option to pay the same in cash or to pay certain bimonthly installments, which, however, were less than the accumulating interest, so that, although the installments were paid, the lien constantly increased, and the value of the policy diminished. Plaintiff paid such installments until the maturity of his policy. *Held*, that he must be presumed to have known his legal rights, and that by accepting the policy and making the payments thereunder he became bound by its terms.

In Error to the Circuit Court of the United States for the District of Nebraska.

This was an action at law, instituted by Gray against the insurance company, to recover on a matured certificate of membership for $4,000 originally (in 1883) issued to him by the Northwestern Mutual Relief Association of Wisconsin. The Wisconsin company did business on the assessment plan, whereby on the death of a member an assessment was made upon surviving members to raise a fund to pay the beneficiary of the deceased member. In 1899 it availed itself of the provisions of the act of the Legislature of Wisconsin (chapter 270, p. 460, Laws 1899), changed its name to the Northwestern National Life Insurance Company, and reorganized so as to do business on the stipulated premium plan, whereby premiums are payable not as a result of assessments on the happening of the death of a member, but in certain sums at fixed periods. In 1901 the defendant company was incorporated under the provisions of chapter 178, p. 233, of the Laws of Minnesota of 1901, to do business on the stipulated premium plan, with power to assume and reinsure the risks and members of other companies and to make by-laws and amendments not inconsistent with the Constitution and laws of the state. On August 29, 1901, defendant entered into a contract with the Wisconsin company by virtue of which it took over all the assets of that company and reinsured its risks. The contract after providing for the assumption of obligations of the Wisconsin company contained the following: "And the assuming of each policy or certificate by the party of the first part [Minnesota company] is expressly subject to the provisions of the articles of incorporation and by-laws of the party of the first part as the same now exist, or as they may hereafter be amended, * * * all whereof constitute and form a part of each certificate and policy hereby assumed." It also contained the following stipulation: "And said party of the first part agrees that all moneys and property received by it, and now constituting or representing the mortuary funds of the party of the second part [the Wisconsin company], and all moneys hereafter collected by it from members of the party of the second part for mortuary purposes, which under their present contracts are applicable to and should be set aside for a mortuary fund, will be by said party of the first part segre-

Digitized by Google

gated, set aside, and used for and applied to the payment of the new valid and existing death, disability, or maturing claims of the party of the second part and expenses incurred until the same shall have been paid, settled, or discharged in full." The result was that 1,310 members of the Wisconsin company, including Gray, accepted re-insurance by the Minnesota company. Of that number 74 held assessment certificates similar to Gray's certificate, and 1,228 had originally held assessment certificates, but had surrendered them to the Wisconsin company and accepted in lieu thereof stipulated premium policies after its reorganization in 1899.

By way of inaugurating its business the defendant company on August 28, 1901, adopted a by-law known as section 6 of article 10, which is as follows: "In all cases" where the policy or certificate of another company is assumed "the premium to be paid thereon by the insured shall be the single premium according to the life expectancy or single premium rate table adopted by the company at the attained age of the insured at the time of issuing or assuming such policy, certificate, or contract by this company, which single premium may be paid in any installments agreed upon or fixed by the board of directors. * * * Any excess thereof [interest] being in payment and in extinguishment of the principal amount of said lien, and in the event of death of the insured occurring at any time before a sum equal to the single premium as aforesaid, with four and one-half per cent. interest per annum in advance, from the date of such contract or such assumption, shall have been paid in cash to this company there shall be reserved from the face of such certificate or policy and charged as a lien thereon a sum equal to the unpaid portion of such single premium and interest, and payment of a sum equal to the face of the policy, less the amount of said lien and interest, shall be payment in full of claim under said policy and the full measure of liability of the company thereunder."

On September 2, 1901, the president of the defendant company issued a circular letter, advising the members of the reinsured company of the assumption by his company of the policies or certificates of insurance previously issued by the reinsured company to them. That letter contained the following statement: "Under the provisions of this contract the Northwestern National Life Insurance Company, of Minneapolis, Minn., assumes your policy or certificate of insurance subject to its terms and provisions in all respects, thereby constituting you a member of this company, subject to its articles of incorporation, by-laws, and the laws of the state of Minnesota. * * * We hope, therefore, that you will appreciate the desirability of maintaining your policy or certificate with the Northwestern, and beg to assure you," etc. "As soon as possible a proper and appropriate certificate of reinsurance will be furnished, to be attached to your policy or certificate, showing that the same is continued as the policy of this company."

On September 3, 1901, the defendant company, by its president and secretary, executed and delivered to the plaintiff, Gray, the following certificate: "This is to certify that the Northwestern National Life Insurance Company, of Minneapolis, Minnesota, did upon the 29th day of August, 1901, by a contract of consolidation, receive into its membership as members and did reinsure all living members of the Northwestern National Life Insurance Company, of Madison, Wisconsin, who upon said date appeared upon the books of said last-named company, to be and who actually were members in good standing thereof and therein, including policy No. 682 on the life of Robert Gray, Schuyler, Neb., subject to their several policies or certificates issued by said company, of Madison, Wisconsin, and to the terms and conditions of said contract of reinsurance; it being expressly stipulated that all of said contracts are to be construed as contracts of the state of Minnesota, and in accordance with the laws of said state, and are assumed subject to the by-laws and articles of incorporation of the reinsuring company, as they now or hereafter may exist, and to the laws of the state of Minnesota, and especially to chapter 178 of the Laws of 1901."

On December 31, 1901, the defendant company adopted a resolution, a part of which is as follows: "Whereas, this company has under a certain contract of reinsurance reinsured or assumed the outstanding risks of the Northwestern National Life Insurance Company, of Madison, Wisconsin,

Digitized by Google

including those carried upon their books as post mortem assessment certificates or policies: Now, therefore, be it resolved that in accordance with section six (6) of article (10) of the by-laws of this company [partly quoted above] premiums payable on account of each thousand dollars represented by the face of each of said policies or certificates, shall be the single premium provided by the agent's manual, or premium rate book, of this company for policies issued on the life expectancy plan, such single premium being based upon the age of the assured on August 29, 1901; that the holder of each such policy now in force be permitted to pay said single premium in cash at his option but that if not paid, and until so paid, payments on account thereof may be made in bimonthly installments, payable on the 10th day of February, 1902, and bimonthly thereafter, each of which said installments shall be as fixed by the following table, said installments being based upon the age of the insured at the date of original issue of the policy by the said Northwestern National Life Insurance Company, of Madison, or Northwestern Relief Association, its prior name." Then follows a table fixing the installments according to age at the date of original issue, and in effect scaling or commuting all certificates of the old series issued before January 25, 1890, to $3,000 and all certificates issued after 1890 to $4,000.

On January 2, 1902, a copy of this resolution was sent to plaintiff, Gray, by the defendant company. The letter transmitting the same reads as follows: "Minneapolis, Minn., Jan. 2, 1902. Dear Sir: Inclosed herewith we hand you copy of a resolution adopted by the board of directors of this company at its regular meeting held at its home office in this city on the 31st day of December, 1901. In accordance therewith your policy No. 52,795 is charged with a lien of $2,096.94 [this sum was fixed on the assumption that the policy had been scaled down to $3,000], "the same being the single premium referred to and imposed by virtue of said resolution as authorized by section six (6) of article ten (10) of the by-laws of the company, copy of which by-laws is also inclosed herewith. The bimonthly premium which you are required to pay on February 10, 1902, and every two months thereafter, is $14.10, and, if not paid when due your policy becomes ipso facto null and void from date of default in such payment. You have the privilege of paying full single premium in cash at any time while the policy is in force, in which event in case of death the policy will be worth to the beneficiary named its full face, * * * but, if death occurs before the lien is fully paid, the unpaid part thereof will be deducted from the face of your policy at your death, the balance constituting the full measure of the company's liability thereunder. Under the terms of the policy as existing heretofore, its value at death was limited to the net proceeds of an assessment upon members of the company holding policies of the same kind or class, amounting to only $414.60 from last assessment. Under and by virtue of this resolution said policy, after deducting the present amount of the lien, is worth just $903.06. * * *"

It is stipulated that the single premium necessary to buy $1,000 of insurance at the age of 68, which was Gray's age at the time of reinsurance, was $698.98, and also that Gray paid the defendant company the sum of $14.10 every two months from and after February 10, 1902, until May 17, 1906, when his certificate matured and became payable. Plaintiff's suit, against the reinsuring company only, is predicated upon the original certificate of membership in the Wisconsin company, which matured in 1906, the contract of reinsurance made between the Wisconsin company and the defendant company, and the certificate issued by the defendant company to him, and seeks to recover the full sum of $4,000 specified in the original certificate of membership. This is on the theory that the scaling of his policy from $4,000 to $3,000, and the fixing of a lien for the payment of the single premium, were unauthorized and void. Defendant, without conceding any want of authority or illegality in scaling down the policy from $4,000 to $3,000, for the purposes of this case waives any claim by virtue of that scaling, but contends that the lien fixed against the policy of $698.98 for each $1,000 insured was proper and legal, and that the amount thereof, with interest, less any amounts paid thereon by Gray in the shape of bimonthly payments between the years 1902 and 1906, when it matured, should be deducted from the face of the policy.

Digitized by Google

The court below directed a verdict for the plaintiff for $3,157; that is, for $3,000, the face of the policy as scaled, together with interest. Each party prosecuted a writ of error.

Frank E. Parkinson (George W. Wertz, on the brief), for plaintiff.

Ralph W. Breckenridge (Charles J. Greene and Thomas H. Matters, on the brief), for defendant.

Before SANBORN and ADAMS, Circuit Judges, and PHILIPS, District Judge.

ADAMS, Circuit Judge (after stating the facts as above). Gray had a contract, made in 1883, consisting of a certificate of membership with the Wisconsin company, whereby he was obligated to pay certain assessments which might be made by the company on the occasion of the death of his associate members, and to continue doing so until the maturity of his certificate. The company on its part obligated itself to pay Gray in 1906 80 per cent. of an assessment that might be levied and collected upon its members, not exceeding, however, $4,000. To say nothing of the reorganization of the Wisconsin company in 1899, whereby it abandoned the principle upon which its business had theretofore been conducted, by entering into the reinsuring contract with the Minnesota company in 1901 and transferring its assets to the latter company, it thereby disabled itself to perform its part of the executory contract with Gray and renounced its obligation. A cause of action at once accrued to Gray for breach of the contract. Lovell v. St. Louis Mutual Life Ins. Co., 111 U. S. 264, 4 Sup. Ct. 390, 28 L. Ed. 423; Roehm v. Horst, 178 U. S. 1, 20 Sup. Ct. 780, 44 L. Ed. 953. What his remedies were for the breach need not be dwelt upon. Suffice it to say he did not avail himself of any of them. However binding and obligatory the contract of reinsurance was as between the two insurance companies, it could not and did not obligate any of the original certificate holders of the Wisconsin company to accept contracts of reinsurance from the Minnesota company. Whether they should do so, or whether they should resort to other remedies for securing relief occasioned by the breach of their contracts, was optional with them. Lovell v. St. Louis Mutual Life Ins. Co., supra.

Gray, on September 2, 1901, shortly after the reinsurance contract was executed, was advised by the Minnesota company of its assumption of his certificate, and the hope was expressed that he would deem it desirable to maintain his policy or certificate with the Minnesota company. He was also at the same time advised that a certificate of reinsurance would soon be issued to him. To these announcements he made no objection. Soon thereafter the Minnesota company executed and delivered to him its own certificate, reciting therein its execution of the reinsurance contract, the fact that Gray was a member in good standing in the reinsured company, and obligating itself to reinsure him on the terms and conditions of the contract of reinsurance and subject to the by-laws and articles of incorporation of the reinsuring company as they then or thereafter might exist. This certificate, also, was received by Gray without objection, and he counts on it in

Digitized by Google

this action. Soon thereafter the Minnesota company adopted the resolution of December 31, 1901, fixing the single premium to be paid by holders of assessment certificates, or to be charged as liens against their certificates, and also fixing the bimonthly installments to be paid thereon by the insured; and finally, on January 2, 1902, the defendant company notified Gray that the amount of such single premium on his certificate was $698.98 for each $1,000, or $2,096.64 on the $3,000 certificate as scaled down; and that the amount of bimonthly installments to be paid by him on account of that fixed single premium was $14.10. To this he made no objection, but complied with its requirement, and made the bimonthly payments regularly, beginning February 10, 1902, and continuing until May 17, 1906, when his certificate matured. His contention now is that the by-law (section 6 of article 10), and the proceedings taken thereunder, fixing the single premium and charging the same as a lien against his certificate, were unauthorized and void.

A lengthy argument is made in support of this contention, but we find it unnecessary to consider its merits. The case is solvable on simpler grounds. No advantage appears to have been taken of Gray by any one. Notwithstanding the reinsuring company had no power to do new business on the assessment plan, it seems to have made provision by which the rights of members of the reinsured company, who continued to hold assessment certificates, should be respected, if they concluded not to accept new certificates. It provided, in substance, that all money received by the reinsuring company, constituting the mortuary fund of the reinsured company, and all money thereafter to be collected from members of the old company for account of such a fund, should be set aside and used to pay death, disability, or maturing claims, until they should be all paid, settled, or discharged in full; but with a view of bringing about a novation of the old contracts, which obviously was the general purpose of the reinsuring contract, it devised a scheme for doing it. Few assessment certificates only of those which had originally been issued by the old company had not been converted into stipulated premium policies before the reinsuring contract was made. To secure an adjustment of them to the new business methods of the reinsuring company it devised a scheme providing for a fixed premium for the entire term of the certificate and payment of the same in cash by bimonthly installments, or to make the payment thereof a charge against the policy at its maturity, and submitted this scheme as a proposition to the members of the reinsured company for their consideration, acceptance, or rejection. Without hesitation, so far as this record discloses, and presumably with full knowledge of the provision made for him in the event he concluded not to accept the proposition, and with like full knowledge of the remedies available to him for the breach of his contract, Gray elected to accept and did accept the terms offered to him by the new company. He entered upon the performance and continued in the performance of the terms agreed upon for a period of 4½ years, until his certificate matured. This amounted to a novation, a new contract voluntarily entered into by Gray, and he cannot now repudiate it. His election was final and conclusive. Iversen v. Minnesota Mut. Life Ins. Co.

Digitized by Google

(C. C.) 137 Fed. 268; Supreme Council A. L. H. v. Lippincott, 134 Fed. 824, 67 C. C. A. 650, 69 L. R. A. 803; Davitt v. National Life Ass'n, 36 App. Div. 632, 56 N. Y. Supp. 839.

We have carefully examined and considered the case of Smith v. Northwestern Nat. Life Ins. Co. of Minneapolis, Minn., 123 Wis. 586, 102 N. W. 57, in which the reinsuring contract involved in this case was considered by the Supreme Court of Wisconsin, but it affords us no aid. The proof must have been different from that before us. The court there said:

"In this instance the consolidation agreement expressly assumes all the liabilities of the Madison company, subject only to the articles and by-laws of the defendant; but no such articles or by-laws were offered in evidence, except a statute of Minnesota which, perhaps, enters into them, and which provides that in case of consolidation the new company shall be liable for the payment of all obligations of the consolidated companies. Hence there is no proof to limit the complete assumption by defendant of the Madison company's liability to plaintiff. Any such question is, however, foreclosed by the finding of fact that such assumption was made, since defendant reserved no exception thereto."

With such a record the conclusion in that case was inevitable.

Gray originally had a certificate of membership in the old assessment company, depending for its value upon changeable and uncertain facts. An assessment company, unlike an old line company, organized on the stipulated premium plan, does not agree to pay a definite sum on the occasion of the death of a member or maturity of his certificate, but only to make an assessment of a certain amount upon all the members and to pay the beneficiary a certain percentage of that aggregate sum. As membership diminishes necessarily the amount to be realized by an assessment diminishes accordingly, and the cost of insurance secured increases correspondingly. With the loss of members in the old Wisconsin company, occasioned by the abandonment of its assessment feature and adoption of the old line stipulated premium feature, Gray's certificate became comparatively of small value. Only 74 of the old assessment members actually remained at the time the reinsurance contract was entered into. Under no theory advanced by learned counsel for Gray would he have been entitled, apart from the provisions of the contract of reinsurance, to any such sum as $4,000, or $3,157 as allowed by the trial court. In the letter of defendant's president to Gray of date January 2, 1902, the value of his policy was stated to be $414.60. Whatever its value may have been, the fact was (and it doubtless was well known to Gray) that his rights under the old assessment certificate were small and uncertain. Accordingly, when the defendant company offered him a policy of $3,000 maturing in 1906, subject to a lien of $2,096.94 for a single premium, representing the cost of insurance for one of Gray's attained age of 68 years for the period of four years, or a policy of $4,000 subject to a like lien of $2,795.92, as an inducement for him to reinsure with it, it certainly made no unfair proposition. It practically offered to him approximately $1,000 for what was then not considered of half that value. Moreover, it offered him what, according to the facts stipulated to be true in this case, was insurance at the usual and accepted cost thereof.

Digitized by Google

Treating the certificate in suit to be for $4,000 according to the concession of counsel for the defendant company, the single premium to carry that amount of insurance until the maturity of the certificate in May, 1906, was $698.98 per $1,000, or a total of $2,795.92. Gray paid between 1902 and 1906 in bimonthly installments a total sum of $408.92. Charging him with interest on the amount of the single premium, and crediting him with the payments made and interest thereon, a net balance of $2,997.77 is found to have been due the defendant company, at the time the certificate matured, as unpaid premium thereon. This amount, therefore, being deducted from the face of the certificate, leaves a net balance due Gray of $1,002.23. This, with interest from May 17, 1906, to the date of judgment in the court below, April 18, 1907, makes the total sum of $1,057.35 which the plaintiff was entitled to recover, instead of $3,157, for which judgment was rendered. In other words, plaintiff was allowed to recover $2,099.65 too much.

Our conclusion, therefore, is that the judgment must be reversed unless within 40 days after the filing of this opinion the plaintiff files in the clerk's office of the court below a remittitur of $2,099.65, and within 10 days thereafter files with the clerk of this court a certified copy of the record showing the filing of such remittitur. If such remittitur and certified copy thereof be filed, a judgment will then be entered affirming the judgment below to the extent of $1,057.35. If such remittitur and certified copy be not filed within the times aforesaid, the judgment will be reversed, with directions to grant a new trial.

(161 Fed. 495.)

KAHN et al. v. W. A. GAINES & CO.

(Circuit Court of Appeals, Eighth Circuit. April 27, 1908.)

No. 2,700.

1. TRADE-MARKS AND TRADE-NAMES—INFRINGEMENT—PRIOR USE.

The right of defendants to use in their trade the words "Old Crow," or "Crow," as applied to whisky, could not be measured by the extent to which they employed it, it being sufficient, to protect them from a charge of infringement of plaintiff's alleged monopoly of such term as a trademark, that defendants used the same in connection with their business as whisky dealers prior to any appropriation thereof by complainant, and continued so to use it; nor could defendants' right to use it ad libitum be destroyed by the greater amount of complainant's sales under the designation of "Old Crow," or by the asserted superiority of complainant's product.

[Ed. Note.—For cases in point, see Cent. Dig. vol. 46, Trade-Marks and Trade-Names, §§ 24, 25, 31.]

2. SAME—EVIDENCE—RECORD IN OTHER CASES.

Where, in an action for infringement of complainant's right to the use of the terms "Crow" and "Old Crow" as a name for whisky and for unlawful competition, complainant claimed that defendants' whisky sold under such brand was fraudulent, impure, and deleterious, the record and evidence in a prior case brought by complainant for infringement of its trade-mark, to which defendant was not a party, while inadmissible

Digitized by Google

as proof of the issues on trial, was competent for the information of the chancellor as to the scope of the decision in the prior case as a precedent.

[Ed. Note.—Unfair competition, see notes to Scheuer v. Muller, 20 C. C. A. 165; Lare v. Harper Bros., 30 C. C. A. 376.]

3. SAME—UNFAIR COMPETITION.

In an action for infringement of plaintiff's alleged trade-mark and for unlawful competition, evidence *held* insufficient to show that defendants' whisky, sold under the name of "Old Crow," or "Crow," in competition with plaintiff's whisky, sold under the same name, was deleterious or fraudulent, or that defendant was guilty of unfair competition in the use of such names.

Appeal from the Circuit Court of the United States for the Eastern District of Missouri.

For opinion below, see 155 Fed. 639.

Jacob Klein and Luther Ely Smith (Warwick M. Hough and A. J. Freiberg, on the brief), for appellants.

James L. Hopkins (Daniel W. Lindsey, on the brief), for appellee.

Before SANBORN, Circuit Judge, and PHILIPS, District Judge.

PHILIPS, District Judge. The appellee (complainant below), obtained decree in the Circuit Court establishing its asserted claim to the words "Old Crow" as a trade-mark, enjoining appellants (defendants below) from the use thereof in their business, finding the defendants guilty of unfair competition in business, and ordering an accounting.

The original bill was filed in November, 1904. The bill alleges that the complainant is the sole and exclusive owner of a trade-mark for whisky consisting of the words "Old Crow," which words were open to adoption as a trade-mark for whisky in the year 1867, when the complainant's predecessor in business, Gaines, Berry & Co., adopted and commercially applied the said trade-mark for whisky distilled by them, and that it acquired by assignment said trade-mark, which has been continuously applied by it and its predecessors in business upon packages containing whisky from the year 1867 to the time of filing the amended bill. The bill further alleges that in 1835 one James Crow became domiciled upon Glenn's creek, Woodford county, Ky., when and where he began the manufacture of whisky of superior quality, which became designated about that time as "Crow," or "Old Crow," and that he was continuously engaged in the distillation of whisky as "Crow" or "Old Crow" to his death in 1855; that at that time a considerable quantity of said whisky remained upon the market and was commercially known and dealt in until the year 1867; that no whisky was produced during said period anywhere to which the word "Crow," or "Old Crow," was applied as a trade-mark; that in that year a predecessor of complainant, to wit, Gaines, Berry & Co., began the production on said Glenn's creek of their whisky, using the same process and material theretofore used by said Crow; that from 1835 to this time the words "Old Crow" have been applied continuously to whisky produced by the process of Crow, and to no other whisky whatever; that the distillation and produc-

Digitized by Google

tion of said whisky has always been on said Glenn's creek, and not elsewhere. The bill further alleges that Abraham M. Hellman and Moritz Hellman, the defendants, had been guilty of fraudulent acts and unfair competition in selling a spurious compounded liquor as and for the complainant's whisky, to its damage in the sum of $5,000, and prayed for an accounting.

The answer denied specifically the allegations of the bill and alleged the ownership of the word "Crow," "Old Crow," "J. W. Crow," and the celebrated "Crow Bourbon," together with a figure of a crow, in connection with their own business upon packages of whisky in their and their predecessor's business, and so continued the use thereof from the year 1863 and prior thereto; alleging that the whisky sold by complainant under the words "Old Crow" was an unrefined, harmful, and deleterious article, and that the whisky sold by them was a blend largely free from impurities. The replication was general. The defendants filed a cross-bill, claiming the trade-mark in question and asking for an injunction. This need not be considered, as at the hearing the defendants' counsel declined to insist upon any affirmative relief.

The evidence tended to show that a man named James Crow, usually called "Jim Crow," and sometimes known as "Crow," or "Old Crow," began the manufacture of whisky in Woodford county, Ky., about the year 1850. The evidence does not show that he ever owned or operated any distillery in his own right, but worked for persons owning distilleries. He died about 1855. Prior to his death he worked at various distilleries in that neighborhood, to wit, at the Edwards distillery, at Anderson Johnson's distillery, at Jack Johnson's distillery, at Johnson & Yancey's, at Oscar Pepper's distillery, and at Capt. Henry's distillery. Whisky made by him was called "Crow," or "Old Crow," as stated by one of the witnesses, just as whisky made by Taylor was called "Old Taylor." The process employed by Crow was what is known as "hand-made" whisky; but there was no secrecy about his process, nor did it differ materially from that employed by other distilleries of the same period. He used in the manufacture the grain grown in the neighborhood, which was not different from that grown in the Western states. When he worked at Johnson & Yancey's distillery, it was not known as "Crow's" whisky, but as "Johnson & Yancey's." The old Oscar Pepper's distillery, at which Crow at one time worked, was run by various distillers from 1855 to 1865. This whisky was called "Old Oscar Pepper," and was sometimes called "Old Crow." The men who worked with him understood the process employed by Crow and used it in other distilleries.

The copartnership firm of Gaines, Berry & Co. began business as distillers in Woodford county, Ky., in 1867 and operated the old Pepper distillery as claimed successor. This concern was later succeeded by W. A. Gaines & Co. a copartnership, which on the 9th day of July, 1882, filed in the Patent Office at Washington, D. C., application for registering the following as a trade-mark:

"Old Crow Distillery, Woodford County, Kentucky. Copper Distilled Whiskey. W. A. Gaines, Distiller."

Digitized by Google

Accompanying this application was the statement that "this trade-mark we have used in our business since January, 1870." In 1887 W A. Gaines & Co. incorporated under the same name. In June, 1904, shortly before the institution of this suit, and after controversy had arisen between the complainant and the defendants respecting the use of the name of "Crow," or "Old Crow," in business, the complainant corporation filed in the Patent Office application to register as a trade-mark the words "Old Crow." The sworn statement of the officer of the company accompanying the application asserted that:

"This trade-mark has been continuously used by the said W. A. Gaines & Co. and its predecessors since the year A. D. 1835."

To say the least of it, these different statements show some juggling with facts and disclose inconsistent positions. The record does not show any written devolution of title or right of trade-mark passing from Gaines, Berry & Co. to W. A. Gaines & Co., and from the latter to the complainant corporation. Be this as it may, no unprejudiced mind can read the evidence in this case without the impression that the conception of a trade-mark in the words "Crow," or "Old Crow," did not enter the mind of Gaines, Berry & Co. prior to 1870; and they may not, under the issues presented by the pleadings, lay any claim thereto anterior to 1867. It is to be conceded that after 1870 Gaines, Berry & Co. and W. A. Gaines, and their successors, W. A. Gaines & Co., built up a large, successful business in the manufacture of whisky, which has extended throughout the country, and that their whisky, under the designation of "Old Crow," attained wide celebrity. The question remains, however, to be answered: Has the complainant maintained by proof the assertion that the defendants, or their predecessors in business, wrongfully invaded its exclusive right to the use of the words "Crow," or "Old Crow," in business?

The evidence, without contradiction, establishes the following facts: That as early as 1862 the firm of I. & L. M. Hellman, composed of Isaac Hellman and Louis M. Hellman, were engaged in the wholesale liquor business on Pine street, in the city of St. Louis, Mo.; that as early as 1862 or 1863, on the whisky barrels employed in their trade, they had a bird with wings spread, in imitation of a crow, burnt into the head of the barrel, and the word "Crow," or the words "Old Crow," were burnt beneath this figure. This fact is affirmed by the testimony of Mr. Herman A. Haeussler, an attorney at law of St. Louis, whose reputation for intelligence and integrity is such as to entitle it to full credence. The firm of lawyers with which he was connected, whose office was the next door to the business house of the Hellmans, acted as counsel for I. & L. M. Hellman in the conduct of their business. Mr. Haeussler testified that as early as 1862–63, they had a brand of "Crow Whisky"; that he saw the barrels on the sidewalk ready to ship, with the figure of a crow either on the barrels or on the signs (and he thinks the barrels), with the word "Crow." The evidence further shows that as early as 1865 they had signs in frame prepared, displayed in the windows

Digitized by Google

of their storehouse, like Exhibit No. 6, represented by the following cut, large numbers of which were used in connection with their whisky trade:

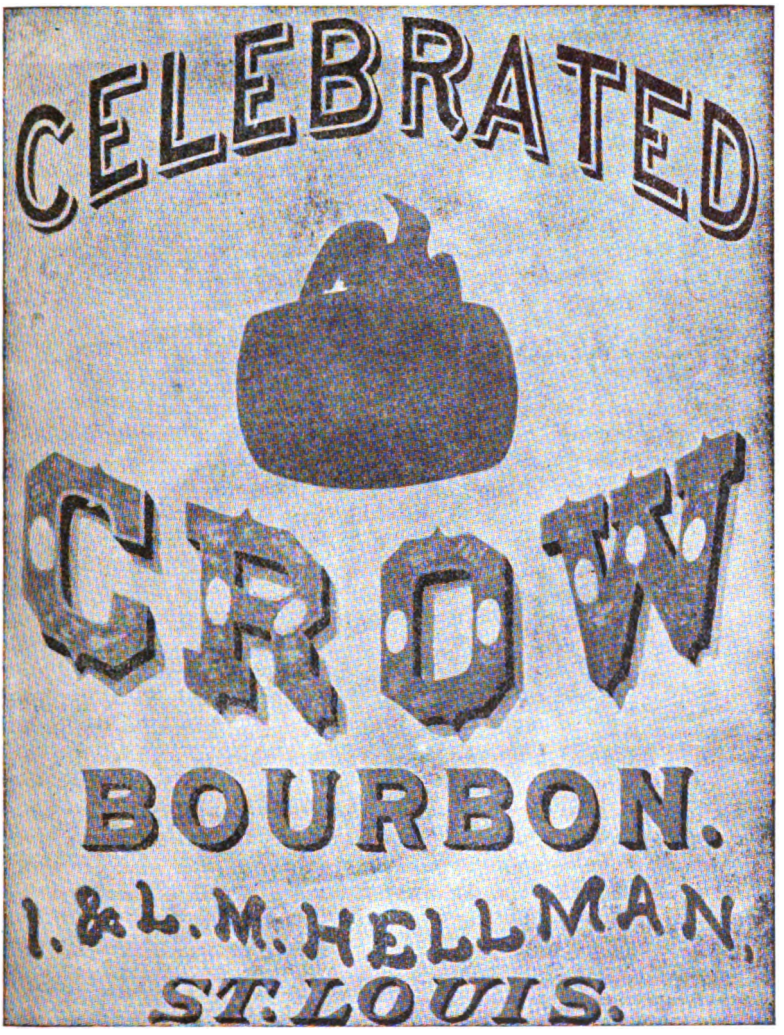

Some of the books of said firm kept at that time were in evidence, and showed sales of whisky, sometimes designated as "Crow," and "J. W." or "J. C. Crow." That they used also the designative term "Old Crow" appears in the testimony of several witnesses. Mr. Charropin of Covington, La., testified that he entered the employ of I. & L. M. Hellman about November, 1866, and continued therein until 1870; that he traveled first through Illinois and parts of Missouri, and afterward in the South as far as New Orleans, and in Tennessee,

Digitized by Google

Arkansas, and Mississippi. He gave the names of parties to whom he had sold Hellman's whisky, and deposed that he sold to customers "Old Crow" whisky which the Hellmans handled, and that he remembered it was the brand used at the house at the time. Mr. Schaeffer, of Yazoo City, Miss., testified that he had dealings with I. & L. M. Hellman in 1866, and probably the latter part of 1865, and that he purchased liquor from them under the name of "Crow," or "Old Crow."

"Q. Will you describe what marks, if any, these barrels bore? A. They had on one end of the barrel a bird, with wings spread out, burnt in the head of the barrel, and the words 'Old Crow' were burnt under them. They were all burnt, not marked; burnt in the wood."

Mr. Heron, of Memphis, Tenn., testified that he entered the employ of I. & L. M. Hellman, in September, 1865, and remained with the firm until 1882 or 1883, as assistant rectifier. He identified Exhibit No. 6 as similar to the one used when he went there.

"Q. Now, will you state, Mr. Heron, how frequently the firm sold whisky as 'Old Crow' whisky during the time you were in the employ of the firm? A. Well, I couldn't say how often I sold it; but, to the best of my knowledge, there was very seldom a month or week that some did not go out. Q. By whom was the 'Old Crow' sold by the firm made? A. It was blended right in the house. You could call it blending or compounding right in the house."

This condition continued up to 1867, during which the bill alleges the claimed trade-mark had not been appropriated by the complainant. In August, 1867, Isaac Hellman died. The business of this house has been continously conducted in St. Louis, up to the time of this litigation, by the brother and their sons, who succeeded thereto, doing business under the name of I. & L. M. Hellman, employing the same brands and designation in business. Their trade was confined principally to states down the Mississippi river and southwest. Several of the men who worked for this house between 1862 and 1870, as well as several of the traveling salesmen of the house, are living and gave their depositions in this case. Since 1867 this house has conducted its business as theretofore, with no knowledge carried home to its members that the complainant, or its predecessors in business, were asserting any proprietary right to the use of the word "Crow," or "Old Crow," in trade. The evidence fails to show that the Hellmans, prior to this controversy, ever heard of Glenn's creek, in Woodford county, Ky. The whisky sold by them carried with it, plainly marked on the packages, the fact that it was the whisky of I. & L. M. Hellman, of St. Louis, Mo., or the name of the firm at the time in business. There is not a particle of evidence in this record to warrant the imputation that at any time or place the defendants ever represented that their whisky was manufactured on Glenn's creek, or that it was the manufacture of the complainant. There is no evidence that any purchaser from them was ever deceived into the belief that he was obtaining from them whisky manufactured by the Glenn's creek monopoly. There is, therefore, no foundation in fact or law for the charge of unfair competition.

Digitized by Google

After alleging in the bill of complaint that by reason of the defendants' unfair competition the complainant has been damaged in the sum of $5,000, and its vast business jeopardized and threatened with destruction by the defendants' competition, its counsel, to impair the evidence that the Hellmans had sold whisky as far back as 1863 under the name of "Crow" and "Old Crow," tacked course in argument by asserting that this use was so rare as to subject it to the maxim "de minimus lex non curat." The right of the defendants to use in their trade the designative words "Old Crow," or "Crow," cannot be measured by the extent to which they employed it, whether more or less frequent at times. It is sufficient to protect them from the charge of an unlawful invasion of the complainant's claimed monopoly that they used in connection with their business as whisky dealers the tradename in question prior to any appropriation thereof by the complainant, and that they have so continued to use it. Neither can their right to use it ad libitum be destroyed by the overshadowing comparative amount of the complainant's sales under the designation of "Old Crow" whisky, nor by the asserted superiority of its product.

Passing by the criticism made by defendants' counsel of the words "Old Crow" as a trade-mark, on the ground that in its origin it referred merely to the name of "Crow" as the compounder of that grade of whisky, and that its later use was merely designative of the quality of the article, and, therefore, it might not constitute a technical trade-mark if the complainant employed the words "Old Crow" and "Crow" in its trade as designating the quality of the whisky sold by it, the defendants are not guilty of an invasion of the asserted exclusive monopoly of the complainant.

The bill stigmatizes the defendants' business as fraudulent, in imposing upon the public a blended whisky, impure and deleterious. And what it lacks in proof of this its counsel has undertaken to supply by invective and epithets. The learned trial judge, from his opinion in the record, seemed impressed as to this charge of the bill by the opinion of the Kansas City Court of Appeals in the case of W. A. Gaines & Co. v. E. Whyte Grocery Fruit & Wine Co., 107 Mo. App. 570, 81 S. W. 648. It is assigned for error that the court admitted in evidence the entire record, including the voluminous evidence in the bill of exceptions, in that case. In view of the conclusion reached by us on the merits, we may pass by this criticism with the observation that, while the evidence in that case could not be employed as proof of the matters in contestation in the case here under review against this appellant, who was not a party to that suit, it could be considered by the chancellor for his information as to the scope of the decision in that case as a precedent. Liebig's Extract of Meat Co. v. Libby et al. (C. C.) 103 Fed. 87–89; N. Y. Filter Mfg. Co. v. Jackson (C. C.) 112 Fed. 678–680; Liebig's Extract of Meat Co. v. Walker (C. C.) 115 Fed. 822–825; American Bell Tel. Co. v. Wallace Electric Co., (C. C.) 37 Fed. 672; Rose v. Fretz (C. C.) 98 Fed. 112; Adams v. Tannage Patent Co., 81 Fed. 179, 26 C. C. A. 326

The evidence, especially on the part of the defendants, in the case under review, is so materially different in character and effect from

Digitized by Google

that in the case tried in the Jackson county circuit court, as also in that of Gaines & Co. v. Leslie, 25 Misc. Rep. 20, 54 N. Y. Supp. 421, cited by complainant's counsel, as to render them of no controlling force on the facts involved in and the principles of law applicable to this case. The only evidence touching the character of the whisky sold by the Hellmans is that it was blended whisky—a mixture of so-called straight whisky with refined spirits from which, the blenders claimed, the largest possible percentage of impurities were removed. Whether this made it better or worse than that manufactured by the complainant does not affect this case. No customer of the Hellmans is complaining, and the complainant has failed to show that the defendants palmed off their whisky on anybody as that of the complainant's manufacture.

The complainant lays much stress upon the situs of its distillery on Glenn's creek, in Woodford county, Ky., as if there were some peculiar virtue in the air and water of that place adapted to the distillation of whisky, which it had in some way wholly appropriated. The evidence does not show that Glenn's creek in any way entered into the composition of the whisky. The water used came from the springs some distance from the creek, in nowise different from other springs in the limestone region of the Blue Grass district of Kentucky. We fail to perceive the relation of all this to the claimed trade-mark. As there was no secret about the process of distillation employed by James Crow, which the complainant assumes to follow, as "hand-made" whisky (and there was some evidence that the complainant now employs machinery in some material respect in the process of manufacture), the use of which process is not secured to the complainant by any patent, and as the defendants have not claimed to use either Kentucky corn, water, or air in the composition of their blended whisky, and did not represent that it came from Glenn's creek, all these matters are quite immaterial on the issue of unfair competition in trade.

After a careful consideration of the mass of relevant and irrelevant evidence in this record, our conclusion is: (1) That inasmuch as the defendants' predecessors in business, prior to the use or the adoption of the designative word "Crow," or the words "Old Crow," as a trade-mark, employed those words as descriptive terms in connection with their business as dealers in whisky in St. Louis, Mo., and said predecessors and the defendants so continued to use the same, to a limited extent, up to the time of the institution of this suit, in good faith, they are not guilty of infringing the complainant's claimed trade-mark; and (2) that the defendants are not guilty of having engaged in unfair competition with the complainant in the prosecution of their business.

It results that the decree of the Circuit Court must be reversed, and the cause remanded, with direction to the Circuit Court to dismiss the bill of complaint.

Digitized by Google

(161 Fed. 508.)

MUNDY v. SHELLABERGER.

(Circuit Court of Appeals, Eighth Circuit. March 31, 1908.)

No. 2,648.

1. HOMESTEAD—CONTRACT BY HUSBAND ALONE TO CONVEY—MISSOURI STATUTE.
An executory contract to convey a homestead, signed by the husband alone, is within Rev. St. Mo. 1899, § 3616 (Ann. St. 1906, p. 2034), which provides that every sale or alienation of a homestead by the husband shall be null and void, and such a contract can neither be enforced in equity nor be made the basis of an action for damages for nonperformance.

[Ed. Note.—For cases in point, see Cent. Dig. vol. 25, Homestead, §§ 191–202.]

2. SPECIFIC PERFORMANCE—ENFORCING PARTIAL PERFORMANCE—EXCESS OVER HOMESTEAD LIMIT.
Under Rev. St. Mo. 1899, § 3616 (Ann. St. 1906, p. 2034), which makes any alienation of a homestead by the husband alone null and void, an executory contract by a husband to sell homestead property which exceeds in value the statutory limitation of $3,000 will not be specifically enforced by a court of equity as to the excess in value, which was not the contract made, nor will damages be awarded in lieu of performance as to such excess; both parties being chargeable with knowledge that the contract was void when it was signed.

[Ed. Note.—For cases in point, see Cent. Dig. vol. 44, Specific Performance, §§ 20–25.]

Appeal from the Circuit Court of the United States for the Western District of Missouri.

For opinion of the court below, see 153 Fed. 219.

Halbert H. McCluer (Omar E. Robinson and John T. Harding, on the brief), for appellant.

M. A. Fyke and A. S. Marley, for appellee.

Before HOOK and ADAMS, Circuit Judges, and CARLAND, District Judge.

CARLAND, District Judge. This action was brought by appellant to enforce the specific performance by appellee of the following contract:

"Kansas City, Mo. June 18, '04.

"Kirk L. Shellaberger, Kansas City, Mo.—Dear Sir: I herewith contract with and agree to deliver to you one hundred thousand shares of the Logan Oil & Gas Company stock, of the par value of one dollar each, full-paid and nonassessable, also sixty thousand shares of the Northern Petroleum Company stock, par value one dollar each, full-paid and nonassessable, also thirteen thousand one hundred and twenty-five shares Clermont Oil Company stock, par value one dollar, full-paid and nonassessable, for your Winifred Court, 541 Brooklyn avenue, upon which are sixteen brick cottages, and your residence, 135 Park avenue; said properties free from all mortgages. Rents from Winifred Court to come to me from date of delivery of deed; you to retain possession of your residence for 90 days, if necessary, free of rent. Deeds for said properties to be delivered within ten days from this date, or as near that date or sooner if possible. You to bring abstracts down to date. All stock I agree to deliver to you inside of ten days. Dated this 18th day of June, 1904. J. F. Mundy.

"Witness: W. Peard Thomas.

"I accept the above proposition and agree to carry out same.

"K. L. Shellaberger.

"Witness: W. Peard Thomas."

Digitized by Google

It is conceded by appellant that the property described in said contract as 135 Park avenue was on June 18, 1904, the homestead of appellee, occupied by himself and family to the knowledge of appellant. The property described in the contract is located in Kansas City, Mo. Section 3616, Rev. St. Mo. 1899 (Ann. St. 1906, p. 2034), provides that the homestead of every housekeeper or head of a family in cities like Kansas City shall not include more than 18 square rods of ground or exceed in value $3,000. Then follows this additional provision:

"The husband shall be debarred from and incapable of selling, mortgaging or alienating the homestead in any manner whatever, and every such sale, mortgage or alienation is hereby declared null and void: Provided, however, that nothing herein contained shall be so construed as to prevent the husband and wife from jointly conveying, mortgaging, alienating, or in any other manner disposing of such homestead, or any part thereof."

Appellant refuses to accept a decree for the specific performance of the contract for the Winifred Court property alone, and it necessarily results that, if no relief can be granted as to No. 135 Park avenue, the bill must be dismissed. Appellant, while conceding that specific performance of the contract cannot be had as to No. 135 Park avenue, insists that the court for that reason may, if it finds the contract wholly void as to such property, grant him compensation therefor in the way of damages. He further insists that, as No. 135 Park avenue is shown to be of the value of about $10,000, the contract to convey the same was at least good as to the excess in value of said property over and above the sum of $3,000, the homestead limitation, and that, as sections 3624, 3625, and 3626 of the Revised Statutes of Missouri (Ann. St. 1906, pp. 2046, 2047), provide that judgment creditors may have the homestead set off if the land claimed as such is larger in area than that provided by law for a homestead, or, where property is not susceptible of division without injury to the rights of the parties, may have the same sold and the amount of the homestead in value paid to the owner thereof and the excess paid to the creditors, the court may enforce the contract herein in a similar way as to the said excess in value. These contentions by appellant raise the following questions:

First. Is the contract to convey No. 135 Park avenue, treating the same as simply a homestead, wholly void for want of the signature of the appellee's wife, and, if so, can this court award compensation by way of damages for the failure of appellee to convey?

Second. Is the contract valid so far as the value of said homestead exceeds the sum of $3,000, and, if so, will the court proceed to enforce the contract as to such excess in some appropriate manner?

Section 3616, above quoted, declares every sale, mortgage, or alienation of the homestead made by the husband alone to be null and void. If an executory contract of sale can be held to be fairly within the denunciation of this law, then it also must be held null and void. No decision of the Supreme Court of Missouri has been cited, nor have we been able to find any, passing upon the question as to whether an executory contract of sale is within the statute. We are of the opinion, however, that upon principle and authority, where a present sale of the homestead is contemplated, as in the case at bar, an executory

Digitized by Google

contract for the sale of the homestead is within the statute, and therefore null and void when signed by the husband alone. In the case of Thimes v. Stumpff, 33 Kan. 53, 5 Pac. 431, the Supreme Court of that state had occasion to pass upon the validity of an executory contract of sale of the homestead when signed by the husband alone. In reference to this question the court said:

"The court below held, and we think correctly, that the contract made by the plaintiff was void, and that the note and money given and paid thereon by the defendant were without consideration. The Constitution of the state, as well as the statute relating to exemptions, provides that the homestead shall not be alienated without the joint consent of the husband and the wife, when that relation exists. In interpreting and applying the above provisions, it has been uniformly and consistently ruled by this court that, so long as the premises are impressed with the homestead character, no lease, mortgage, or deed, or other contract, intended to alienate the homestead or interfere with its use and occupancy as a homestead, made and executed alone by the husband and without the consent of the wife, is valid or effectual for any purpose whatsoever. * * * If a party cannot convey the homestead by mortgage or deed without the consent of his wife, he certainly cannot make a contract agreeing to convey that will be valid or binding without her concurrence."

In Silander v. Gronna, 15 N. D. 552, 108 N. W. 544, the Supreme Court of North Dakota held an executory contract for the sale of a homestead null and void for all purposes when signed by the husband alone. In Lichty v. Beale, 75 Neb. 770, 106 N. W. 1018, the Supreme Court of Nebraska held that an executory contract for the sale of a homestead entered into by one spouse alone is utterly void. Upon principle we do not see, where a present sale is contemplated, how an executory contract for the sale of the homestead can be looked upon in any other view than a selling or alienating thereof. Especially would this seem true in an action where one of the parties to the contract is asking the court to compel the other party to execute a conveyance in accordance with the contract. Treating the contract, therefore, as being within the statute, we come to the consideration of the question as to whether the contract is wholly void, and, if so, whether damages may be awarded for the failure on the part of the appellee to make a conveyance in accordance therewith. We are of the opinion that, both by the words of the statute itself and by the great weight of authority, the contract which appellant is seeking to enforce, treating No. 135 Park avenue as embracing nothing but a homestead, is wholly void. Waples on Homestead and Exemption, pp. 383, 384, states the rule to be as follows:

"Under the general rule that the husband alone cannot sell or incumber his dedicated homestead, all alienation of it in any form by his act, when the property itself is not liable in rem, is absolutely void, not only as to the rights of his wife, who does not join him in the deed, and as to the children, to whom the law gives the protection of shelter and the comforts of a habitation, but also as to himself. His act is a nullity, and he escapes the consequences which would follow it, so far as his own right and title is concerned, but for the equitable rights and interests of his family. His deed of contract is as though it was never written or designed."

Numerous authorities are cited in support of this statement of the author. We think Judge Philips stated the correct view of the matter

Digitized by Google

when, in deciding the case in the Circuit Court, he used the following language:

"When the text-writers and the courts speak of the right to commute in damages as to a part of the contract not susceptible of specific performance, they have in mind a contract of a party sui juris, which he had a right to make, not forbidden by law, and which he could perform if he had the title, or where he has by some act disqualified himself from performance. The ascertainment and awarding of damages in lieu of the specific thing in equity presupposes a contract valid and one enforceable in an action at law. Whether the suit be in equity for specific performance, with the incidental jurisdiction to proceed to the complete adjustment of the subject-matter of the controversy by awarding damages as to that part of the property embraced in the contract not capable of being conveyed for want of title, or the like, or whether it be an action at law for damages consequent upon failure to entirely perform the underlying basis of the right to relief is the existence of a valid contract. It is inconceivable to the judicial mind how a contract void, especially when it contravenes the public policy of the state where made, can ever form the basis of a suit recognizable either in equity or law."

The following authorities have been examined, and they sustain the view that a contract such as is now under consideration, treating No. 135 Park avenue simply as a homestead, is null and void and cannot be used as a basis for the recovery of damages either at law or in equity: Silander v. Gronna, 15 N. D. 552, 108 N. W. 544; Lichty v. Beale, 75 Neb. 770, 106 N. W. 1018; Clarke v. Koenig, 36 Neb. 572, 54 N. W. 842; Meek v. Lange, 65 Neb. 783, 91 N. W. 695; Teske v. Dittberner, 70 Neb. 544, 98 N. W. 57, 113 Am. St. Rep. 802; Thimes v. Stumpff, 33 Kan. 53, 5 Pac. 431; Hodges & White v. Farnham, 49 Kan. 777, 31 Pac. 606; Webster v. Warner, 119 Mich. 461, 78 N. W. 552; Phillips v. Stauch, 20 Mich. 369; Hall v. Loomis, 63 Mich. 709, 30 N. W. 374; Gadsby v. Monroe, 115 Mich. 282, 73 N. W. 367; Weitzner v. Thingstad, 55 Minn. 244, 56 N. W. 817; Cowgell v. Warrington, 66 Iowa, 666, 24 N. W. 266; Barnett v. Mendenhall, 42 Iowa, 296; Barton v. Drake, 21 Minn. 299.

It would seem useless to cite further authority, but the language of Judge Mitchell in the case of Weitzner v. Thingstad, 55 Minn. 244, 56 N. W. 817, is so clear and forceful that we quote from the opinion as follows:

"But, notwithstanding some respectable authority to the contrary, it seems to us that to hold that a person is liable in damages for the nonperformance of a contract which he is under no legal obligation to perform would be illogical, and without analogy or precedent in the law. The very proposition involves a legal inconsistency. We think that on legal principles such a contract must be held void for all purposes, and not to constitute the basis of any action against the obligor. There are also strong practical considerations in favor of this view. While it is true, as counsel suggests, that to hold the husband liable for damages would not deprive him or his family of their homestead, yet to force him to the alternative of securing his wife's signature to the conveyance or being mulcted in damages for not doing so, and to place the wife in the dilemma of either having to sign the deed or see her husband thus mulcted in damages, might, and naturally would, often indirectly defeat the very object of the statute. There is nothing unjust to the obligee in holding such a contract absolutely void for all purposes. He is bound to know the law, and he always has actual notice, or the means of obtaining actual notice, of the fact that the land with which he is about to deal is a homestead."

Digitized by Google

In this connection we also quote from the opinion of Beck, C. J., in Cowgell v. Warrington, 66 Iowa, 669, 24 N. W. 268:

"The district court held that the specific performance of the contract in suit could not be enforced, but awarded damages against defendant. We think, under the plain language of the statute (Code, § 1990), the contract is invalid, and the defendant incurred no liability thereon. It is declared in the section just cited that a conveyance for the sale of the homestead, unless the wife concurs in and signs it, 'is of no validity.' Defendant bound himself to execute a conveyance which, under the law, would have been void. Surely plaintiff can recover no damages for the failure of defendant to execute a void deed. But, if the contract is to be regarded as a conveyance, it is equally plain that defendant is not liable for damages thereon, for the reason that it is void."

We have considered the decisions cited from the Supreme Courts of California and of Texas, but do not think that under the Missouri statute, which provides that the alienation of the homestead by the husband alone shall be null and void, such decisions can be held to be the rule in Missouri. Decisions such as Gee v. Moore, 14 Cal. 472, and Stewart v. Mackey, 16 Tex. 56, 67 Am. Dec. 609, and others, are rested on the ground that the entire object of the homestead provision is to secure a homestead, and that it was not intended to infringe upon the husband's rights of property any further than is necessary to accomplish that object. In these decisions the alienation of the homestead by the husband alone is held good as to the reversionary interest, or, in other words, that the conveyance or contract is good as soon as the property ceases to be occupied as the homestead. As we have heretofore said, we do not think that such a rule can be established in a jurisdiction where the statute itself makes such alienation of the homestead absolutely void.

In what we have heretofore said in regard to 135 Park avenue we have treated that property as being a homestead, and nothing more. We now come to the claim of the appellant that, as the property is worth more than the homestead limitation in value, we may secure to the appellant the excess in value of said property over and above the homestead limitation. There are cases which hold that the excess above the monetary limitation is under no restraint as to sale or mortgage. But the question, when it has been so decided, has not arisen in cases where specific enforcement of an executory contract of sale was asked, except in two or three cases. We will refer to the cases cited by counsel for appellant in support of this last contention.

Thorpe v. Thorpe, 70 Vt. 46, 39 Atl. 245, was an action to foreclose a mortgage. It was decided in that case that a husband who owns land surrounding the house which he occupies with his family for a home, and which together with the house is of more value than the homestead exemption, may select out and convey, free from homestead rights, a portion of such surrounding land by his sole deed, provided the land conveyed had not been, and was not then, used for any homestead purposes, or any purpose in connection with the home or dwelling, although it was so located that it might be used for such purposes. Goodloe v. Dean, 81 Ala. 479, 8 South. 197, was an action to foreclose a mortgage. The amount of land mortgaged was 240 acres. The homestead limitation was 160 acres. It was decided that

Digitized by Google

the mortgage was good for the excess in area. De Graffenried v. Clark, 75 Ala. 425, and Butts v. Broughton, 72 Ala. 294, are cited to support the above decision. Neiman v. Schuster (Tex. Civ. App.) 43 S. W. 1075, was an action to recover the possession of 4 acres which were a portion of a tract of 200 acres claimed as a homestead. It was alleged that at the time Neiman conveyed the 4 acres they were part of the homestead, and that the conveyance by Neiman was void for want of the signature of Mrs. Neiman. The court decided that as the entire tract of land owned by Neiman contained more than 200 acres, and as there was no such use of the 4 acres in controversy as necessarily constituted it a part of the home, the conveyance was good without the consent of the wife. Wallace v. Harris, 32 Mich. 399, was a suit in equity to settle certain disputes over real estate. The Constitution of Michigan limits the homestead to 40 acres, when not included in any town plat, city, or village. It was decided in this case that a conveyance of one entire tract of 80 acres was good as to that part of the tract that did not constitute the homestead. In State Nat. Bank of Louisiana v. Lyons, 52 Miss. 184, it was decided that a mortgage on land, which was a homestead and worth $10,000, would be enforced as to the excess over $2,000, the homestead limitation. Coles v. Yorks, 31 Minn. 213, 17 N. W. 341, was a case decided by the Supreme Court of Minnesota. Yorks and his wife resided upon a block of land in the city of Stillwater, which block was subdivided into 12 lots. Yorks executed a mortgage upon the property without the wife's signature. The rightful homestead of Yorks was one lot. It was held in this case that the mortgage was good for the quantity of land in the block, excepting one lot. In Boyd v. Cudderback, 31 Ill. 113, it was decided that a mortgage by a husband alone on property including the homestead was good as to the excess. In Despain v. Wagner, 163 Ill. 598, 45 N. E. 129, it was decided that a deed by a married woman to a tract of land including her homestead was good as to the excess value of the homestead tract. In Ferguson v. Mason, 60 Wis. 377, 19 N. W. 420, the Supreme Court of Wisconsin held that a conveyance by the husband alone which reserved all homestead rights was not void under the statute of Wisconsin.

The case of Watson v. Doyle, 130 Ill. 415, 22 N. E. 613, is the only case cited where an executory contract of sale of real estate including the homestead was enforced. It appeared in this case that the homestead limitation of value in Illinois was $1,000. The court in this case held that, if the parties seeking to enforce the contract would accept a conveyance subject to the homestead, the court would decree a specific performance. On the other hand, in Clarke v. Koenig, 36 Neb. 572, 54 N. W. 842, it was held that the value of the property did not change the rule making a contract to convey the homestead by the husband alone absolutely void. Phillips v. Stauch, 20 Mich. 369, is to the same effect. In Hall v. Loomis, 63 Mich. 711, 30 N. W. 374, Campbell, C. J., used the following language:

"The fact that the property contained more in value than a homestead, and that the contract may have been valid for the excess, will not avoid the difficulty. In Phillips v. Stauch, 20 Mich. 369, a similar question came up, and this court refused to attempt any specific performance as to the residue,

Digitized by Google

which complainant was willing to accept with compensation, because it was not the contract the parties made, and would require new arrangements not convenient for a court of equity to frame. Mrs. Loomis could not have enforced the contract as it stood, and could not be bound when Hall was not. The consideration was not based on a money valuation, and could not, therefore, be apportioned with any certainty."

There being no controlling authority upon the proposition now under consideration, we must arrive at a conclusion which shall appear to be just and equitable. The specific performance of a contract by a court of equity cannot be claimed as an absolute right. The granting of the equitable remedy is, in the language ordinarily used, a matter of discretion—not of an arbitrary, capricious discretion, but of a sound judicial discretion, controlled by established principles of equity, and exercised upon a consideration of all the circumstances of each particular case. Pomeroy's Equity Jurisprudence, § 1404. In view of the statute of Missouri, which makes the alienation of the homestead by the husband alone in any manner whatever null and void, ought a court of equity by its decision to increase the ability of the husband to dismember and break up the home? Ought the chancellor to exercise his legal discretion for that purpose? Has the court the power to do so?

Appellant stands in no such position as a judgment creditor. When this court is asked to decree a specific performance of a contract, it must be shown that the contract is perfectly fair, equal, and just in its terms, and that the enforcement of it will not be harsh and oppressive. Again, our power to grant any relief whatever must arise from the contract the specific performance of which is sought to be enforced, and that relief cannot go beyond the contract which the court finds the parties have made. How can the court, in decreeing the specific performance of a contract between appellant and appellee, disturb the homestead rights of Mrs. Shellaberger, who was not a party to the contract nor to this litigation? The fact that the lawmaking power has authorized a judgment creditor to carve out a homestead and possess himself of the excess in area or value of a tract of land confers no authority upon this court to do the same under the pretense of decreeing the specific performance of a contract, especially where the wife and family, the principal beneficiaries of the homestead law, are not before the court. We are of the opinion that we have no power in this case to decree a destruction of the homestead without the consent of the wife. So far as the question of damages is concerned in lieu of performance of the contract as to the excess in value, we do not think the appellant stands in a position where he can maintain such a claim. At the time of the making of the contract appellant knew that No. 135 Park avenue was a homestead. Being charged with a knowledge of the law, he knew that appellee could not convey such homestead. He cannot, therefore, be heard to say now that he had been damaged by reason of the inability of the court to disturb the homestead, nor can he with any reason claim that the agreement to convey 135 Park avenue formed any part of the consideration for the contract, as he knew it was void. We have not dis-

Digitized by Google

cussed the whole merits of the case; but the evidence has all been read, and we cannot say that the view we have taken of the homestead question has led to an inequitable result.

The decree of the court below must be affirmed; and it is so ordered.

(161 Fed. 510.)

COBB et al. v. CRITTENDEN.

(Circuit Court of Appeals, Third Circuit. May 7, 1908.)

No. 7.

1. CONTRACTS—ILLEGALITY—DEFENSES.

Where plaintiff tendered certain railroad bonds for delivery under a contract of sale, and defendant refused to receive the bonds, on the ground that plaintiff had obtained them under a void contract with the railroad company, such contract being void in fact, plaintiff could not recover for defendant's refusal to receive the bonds, plaintiff, in order to make a foundation for his suit, being forced to establish an unlawful contract, which the courts would not enforce.

[Ed. Note.—For cases in point, see Cent. Dig. vol. 11, Contracts, §§ 681, 682.]

2. SUBROGATION—SCOPE OF REMEDY—LIEN.

A railroad company having become indebted on certain notes, bonds to the amount of $60,000 were placed in the hands of C., as trustee, to secure the payment of the notes. Thereafter C. paid the indebtedness, took up the notes, and afterwards, on the foreclosure of the mortgage, received the pro rata of $19,000, leaving a balance of $12,000 still due. *Held*, that C. by paying the notes became subrogated to the rights of the creditors against the bonds, on which he had a valid lien for the balance of the debt until payment; and hence the bonds, while subject to such lien, were not deliverable to C. and another under contract for the sale of the bonds of the railway company by the owner.

In Error to the Circuit Court of the United States for the Middle District of Pennsylvania.

Thos. H. Murray, Jas. P. O'Laughlin, Hazard Alex. Murray, Willis I. Lewis, Archibald F. Jones, and Robert R. Lewis, for plaintiffs in error.

W. K. Swetland and A. S. Heck, for defendant in error.

Before DALLAS, GRAY, and BUFFINGTON, Circuit Judges.

BUFFINGTON, Circuit Judge. In the court below (156 Fed. 535), Crittenden, the defendant in error, brought suit against William and Theodore Cobb, to recover on a contract between them, which, after arranging for the sale of certain stocks of the same road by Crittenden to the Cobbs, provided for the sale of certain bonds thereof as follows:

"Said Crittenden further sells and assigns to the said Theodore and William Cobb all of the bonds owned by him, issued by the New York & Pennsylvania Railroad Company to Franklin D. Sherwood and Fred C. Leonard, as trustees. It is impossible to describe in this contract the bonds owned by said Crittenden, for the reason that some of them are undivided bonds, but it is the intention of this agreement that Crittenden shall sell all that he owns whether divided or undivided, but this contract shall apply only to

Digitized by Google

the bonds now owned by Crittenden, and he shall not have the right under its terms to acquire other bonds and seek to deliver them to the Cobbs under the provisions of this contract."

A number of bonds so stipulated for were taken and paid for by the Cobbs, and this suit was brought to recover the stipulated price of 75 cents on the dollar, viz., $26,700, for $35,000 of additional bonds, liability to take which the Cobbs denied. On the trial the jury found a verdict of some $11,000 for the plaintiff. Judgment having been entered thereon, defendants brought this writ of error.

There are three principal questions under the assignments of error, the first of which concerns the plaintiff's right to recover for the price of a proportionate part of $58,400 bonds paid by the railroad for the construction of its Millport Extension. The contention of Crittenden is that he and the defendants entered into an agreement, whereby Theodore Cobb was to take a construction contract from the railroad for the construction of the Millport Extension, for which Cobb was to receive in part payment, the foregoing bonds; that plaintiff was interested in said contract, and was to receive part of said bonds; that Cobb took the contract, built the road, and received the bonds from the railroad; that he never accounted for them, but had them in his hands. Crittenden claimed these bonds were covered by the contract in suit, and thereby Theodore and William Cobb purchased them at 75 cents on the dollar. The defendants denied Crittenden had any interest in the contract, and that. if he had, being a director of the road, the contract was illegal and void. That such contract is illegal and void is conceded; but the court held that fact was not material, as this suit was not brought to enforce the contract, but to recover the fruit of it. Its position is best explained by its own words in the opinion refusing a new trial:

"The remaining controversy was over the bonds received for the building of the Millport Extension, some $58,400. The contract with the company for building this road was taken by Theodore Cobb, as the other had been by J. B. Rumsey, but the plaintiff claimed an interest by virtue of an arrangement, proposed, as he testified, by the defendants, by which he, they, Rumsey, McConnell, and Richardson were to participate, each to put up $5,000 to cover the cost, which was estimated at $30,000. McConnell and Richardson admittedly never went in, and Rumsey dropped out soon after the work started. But the others went on, according to plaintiff, he superintending the construction, and doing practically all that was done by any one in that direction, the defendants furnishing the money, including his share, which he had arranged to raise, but was excused by them from doing. All this, of course, was denied, but the jury have accepted it, and it is therefore to be taken as true. * * * It is objected that Crittenden was a director in the road, as were the others, the defendants, with the rest, and was therefore prohibited by both Constitution and statute from having any interest in its construction. Const. Pa. art. 17, § 6; Act May 15, 1874 (P. L. 178). But we have passed the point where that would be material. Suit is not brought on the asserted arrangement between the parties, with regard to building the road, to recover a share of the profits, nor yet for the bonds representing this, but for the price of the bonds, which simply accrued to the plaintiff out of it, which the defendants agreed to buy. It is the same as if, the transaction having been completed, and the stock and bonds coming to the plaintiff having been turned over to him, the defendants had offered him a certain sum for them, which he had agreed to take. It would be no answer in that case,

Digitized by Google

to an action by the plaintiff on the sale, that the bonds came from a tainted source, or that he became entitled to them in an unlawful way. Nor is this changed by the fact that at the time of the bargain, as well as of suit brought, the bonds were in the defendants' hands. It is true that, in consequence of this, the prohibited arrangement has to be resorted to, to establish and determine the plaintiff's interest, and that, except for it, he would have none. But as already stated, the thing trafficked in and now sought to be enforced is not the gains coming to him out of it, but the bonds into which they had ripened, or rather the price of them, which the defendants agreed to pay. Suppose, to put it in another way, the defendants had said: 'You have so many bonds due you from the building of the Millport Extension, for which we will give you so much,' and the plaintiff had accepted the offer. Can there be any question but that the defendants would be bound?"

In the view indicated by this extract from the opinion of the court below we cannot concur. Theodore Cobb's contract was a lawful one. With Crittenden's interest therein it was an unlawful one. Cobb stood on the legality of his contract, and denied Crittenden's right to participate therein and to recover thereby in this case. To recover Crittenden was therefore forced to establish an unlawful contract, and to make the foundation of his suit that which statute law and public policy forbade. This brought his case within the ban of McMullen v. Hoffman, 174 U. S. 639, 19 Sup. Ct. 839, 43 L. Ed. 1117, wherein it was said:

"In case any action is brought in which it is necessary to prove the illegal contract in order to maintain the action, courts will not enforce it, nor will they enforce any alleged rights directly springing from such contract."

It is therefore apparent the court erred in denying defendants' point that:

"Under the pleadings and evidence there can be no recovery by the plaintiff on account of the $58,400 of bonds issued for the extension of the road to Millport."

So also was there error in permitting a recovery by Crittenden of any portion of the $60,000 of bonds which Theodore Cobb held as trustee. By a paper of January 16, 1897, signed, inter alia, by Crittenden, the Cobbs, and others not parties to this suit, that in consideration of certain outstanding bills, payable of J. B. Rumsey, in the shape of notes in certain banks, aggregating $32,100, and on which the signers were liable as indorsers, accommodation makers, or in other ways, it was agreed that said $60,000 of bonds were "to be placed in the hands of Theodore Cobb, as trustee, as security for the payment of the above indebtedness, said bonds to be negotiated by the said Theodore Cobb, if necessary, when authorized by the undersigned, or by a majority of the undersigned." Subsequently, Cobb paid off all of said indebtedness, and holds the notes. On foreclosure, by the trustee, of the mortgage given to secure these bonds Cobb collected the pro rata of some $19,000 awarded these bonds, but has not been reimbursed for any part of the $12,000 balance. No settlement, accounting, or adjustment between the signers of said paper has been made, or the several amounts due by each ascertained. The trustee, by the terms of the trust, was bound to apply such amount to the bills payable, and in relief of the sureties;

Digitized by Google

and, having paid the debts himself, he had a right to be subrogated to the rights of the nonpaying sureties. The remedy of subrogation is no longer limited to sureties and quasi sureties, but includes so wide a range of subjects that it has been called the "mode which equity adopts to compel the ultimate payment of a debt by any one who in justice, equity, and good conscience ought to pay it." Harris on Subrogation, § 1.

It is therefore clear that under such circumstances Crittenden had no right to recover the bonds from Theodore Cobb, or to recover the price thereof from William and Theodore, and that the defendants' fifth point, viz.:

"The payment of Theodore Cobb, shortly after January 5, 1900, of the notes for which the $60,000 of bonds had been pledged under the agreement of January 26, 1897, as modified by that of September 8, 1898, did not release the bonds from the pledge. He, being trustee at the time of the payment, and holding the bonds as trustee, would be entitled to the benefit of the bonds as security for the money so paid by him until reimbursed by payment to him; and, never having been so reimbursed, there can be no recovery in this action against the defendants on account of those bonds"—should have been affirmed.

This view of the case renders a reversal imperative, and in awarding a venire we express no opinion on the question whether the plaintiff can maintain an action at law for the third element which went to make up the verdict.

(161 Fed. 513.)

UNITED STATES v. MOORE.

(Circuit Court of Appeals, Ninth Circuit. May 18, 1908.)

No. 1,518.

1. PUBLIC LANDS—ORIGINAL TITLE.

The original title to lands in the United States was not in the Indians; their rights being mere rights of possession or occupancy.

[Ed. Note.—For cases in point, see Cent. Dig. vol. 41, Public Lands, § 1.]

2. INDIANS — RESERVATION TREATY — CONSTRUCTION — INDIAN LAND — TITLE —EJECTMENT.

The Indian agreement of 1883 between the United States and Chiefs Moses and Sar-sarp-kin of the Columbia reservation provided for the removal of the tribe at their election, for their surrender of certain reservation lands, and for the allotment in severalty of one square mile of land to each head of a family or male adult, in the possession and ownership of which they should be guaranteed and protected. The agreement was ratified by Act Cong. July 4, 1884, c. 180, 23 Stat. 79, providing that, if the Indians elected to remain on the Columbia reservation, the Secretary of the Interior should cause the quantity of land stipulated in the agreement to be allowed them, which, when selected, should be held for the exclusive use and occupation of the Indians, and the remainder of the reservation be restored to the public domain. *Held*, that Indians to whom lands were allotted in severalty under such treaty acquired a mere right of possession and use, the title remaining in the United States, and that the government was therefore entitled to maintain ejectment against a third person, who had ousted the Indian allottees from possession.

[Ed. Note.—For cases in point, see Cent. Dig. vol. 27, Indians, §§ 25-30.]

Digitized by Google

In Error to the Circuit Court of the United States for the Eastern Division of the Eastern District of Washington.

For opinion below, see 154 Fed. 712.

A. G. Avery, U. S. Atty.

James F. Moore, E. K. Pendergast, and R. W. Starr, for defendant in error.

Before GILBERT, ROSS, and MORROW, Circuit Judges.

ROSS, Circuit Judge. The court below sustained a demurrer to the complaint in this case and dismissed it. The question for decision, therefore, is the sufficiency of that pleading. Upon its face it shows that the action was brought at the request of the Secretary of the Interior and the Commissioner of Indian Affairs and under the direction of the Attorney General. It alleges that, acting in accordance with Act Cong. July 4, 1884, c. 180, 23 Stat. 79, 80, entitled "An act making appropriations for the current and contingent expenses of the Indian Department, and for fulfilling treaty stipulations with various Indian tribes, for the year ending June thirtieth, eighteen hundred and eighty-five, and for other purposes," the President of the United States did on May 1, 1886, by executive order set aside as an individual reservation in favor of and for one Quo-lock-ons, an Indian and a ward of the government, a certain specifically described tract of 640 acres, more or less, situate in Okanogan county, state of Washington; such land having been theretofore selected in accordance with the provisions of the act mentioned under the direction of the Secretary of the Interior and designated "Allotment No 7." The complaint further alleges that the tract in question was prior to such allotment a portion of the Columbia Indian reservation theretofore set aside by executive order for the use and occupancy of Indians; that the aforesaid Quo-lock-ons was, at the time the said individual reservation was so set aside for him, a member of the Columbia tribe of Indians, and resided in the state of Washington on the said Columbia Indian reservation; that during the year 1890 the said Indian, Quo-lock-ons, died intestate, leaving as his only heirs two sons, named, respectively, Frank, alias Dominique, Te-kom-tarl-ken, and Sam Pierre; that thereafter the said Sam Pierre died intestate, without issue, leaving a widow, named Jennie, who is an Indian, and a member of the Columbia tribe of Indians, and then and now residing on the said reservation. The complaint further alleges that at all times heretofore the plaintiff was and still is the owner in fee simple and entitled to the immediate possession of the said specifically described tract of land, subject only to the rights of the said Frank, alias Dominique, Te-kom-tarl-ken, and the said Jennie, to use and occupy the same as an individual Indian reservation and as wards of the plaintiff; that about the month of August, 1904, the defendant, without right or authority, entered upon and took possession of the said 640-acre tract of land, and ousted the said Frank, alias Dominique, Te-kom-tarl-ken, and the said Jennie, and the plaintiff therefrom, and ever since has unlawfully withheld, and still does unlawfully withhold, the possession thereof from the plaintiff and from the said Frank, alias Dominique,

Digitized by Google

Te-kom-tarl-ken, and the said Jennie, to their damage in the sum of $2,000; that the value of the rents, issues, and profits of the premises from the month of August, 1904, and while the plaintiff has been excluded therefrom by the defendant, is $2,000. The prayer is for the recovery of the possession of the demanded premises, for the sum of $2,000 damages for the withholding of the possession thereof, for $2,000 as rents, issues, and profits of the land, and for the costs of the action.

It is manifest that the complaint states a perfect case, unless it be, as is contended on behalf of the defendant in error and as was held by the court below, that the plaintiff conveyed all of its right and title to the tract of land in controversy, and severed all of its relations to the Indians named, prior to the institution of the action. It is too late to talk about the original title to all of the lands in the United States having originally been in the Indians. The contrary was long ago settled. "Undoubtedly," said the Supreme Court in the comparatively recent case of Jones v. Meehan, 175 U. S. 18, 20 Sup. Ct. 4, 44 L. Ed. 49, "the right of the Indian nations or tribes to their lands within the United States was a right of possession or occupancy only. The ultimate title in fee in those lands was in the United States; and the Indian title could not be conveyed by the Indians to any one but the United States, without the consent of the United States"—citing Johnson v. McIntosh, 8 Wheat. 543, 5 L. Ed. 681; Cherokee Nation v Georgia, 5 Pet. 1, 17, 8 L. Ed. 25; Worcester v. Georgia, 6 Pet. 515–544, 8 L. Ed. 483; Doe v. Wilson, 23 How. 457–463, 16 L. Ed. 584; United States v. Cook, 19 Wall. 591, 22 L. Ed. 210; United States v. Kagama, 118 U. S. 375–381, 6 Sup. Ct. 1109, 30 L. Ed. 228, Buttz v. Northern Pacific R. Co., 119 U. S. 55–67, 7 Sup. Ct. 100, 30 L. Ed. 330.

But the courts, as well as Congress, are careful to guard and protect the Indians in all of their rights; the Supreme Court saying, in Jones v. Meehan, supra, in respect to a treaty then under consideration:

"In construing any treaty between the United States and an Indian tribe, it must always (as was pointed out by the counsel for the appellees) be borne in mind that the negotiations for the treaty are conducted, on the part of the United States, an enlightened and powerful nation, by representatives skilled in diplomacy, masters of a written language, understanding the modes and forms of creating the various technical estates known to their law and assisted by an interpreter employed by themselves; that the treaty is drawn up by them and in their own language; that the Indians on the other hand, are a weak and dependent people, who have no written language and are wholly unfamiliar with all the forms of legal expression, and whose only knowledge of the terms in which the treaty is framed is that imparted to them by the interpreter employed by the United States; and that the treaty must therefore be construed, not according to the technical meaning of its words to learned lawyers, but in the sense in which they would naturally be understood by the Indians."

And in concluding a review of various of its previous decisions upon the subject the court, in the case from which the foregoing quotations have been taken, said:

"The clear result of this series of decisions is that when the United States, in a treaty with an Indian tribe and as part of the consideration for the

Digitized by Google

cession by the tribe of a tract of country to the United States make a reservation to a chief or other member of the tribe of a specified number of sections of land, whether already identified, or to be surveyed and located in the future, the treaty itself converts the reserved sections into individual property. The reservation, unless accompanied by words limiting its effect, is equivalent to a present grant of a complete title in fee simple; and that title is alienable by the grantee at his pleasure, unless the United States, by a provision of the treaty or of an act of Congress, have expressly or impliedly prohibited or restricted its alienation."

The question, then, for decision here is: Did Congress by its act of July 4, 1884, above referred to, in ratifying and confirming an agreement entered into on the 7th of July, 1883, between the Secretary of the Interior and the Commissioner of Indian Affairs and Chief Moses and other Indians of the Columbia and Colville reservations, in the then territory of Washington, part with the fee-simple title to the lands therein referred to, or leave the title thereto in the United States for the protection of the Indians in the exclusive use and occupation of such lands? The agreement is as follows:

"Agreement with the Columbia and Colville, 1883.

"In the conference with Chiefs Moses and Sar-sarp-kin, of the Columbia reservation, and Tonasket and Lot, of the Colville reservation, had this day, the following was substantially what was asked for by the Indians:

"Tonasket asked for a saw and grist mill, a boarding school to be established at Bonaparte creek to accommodate one hundred (100) pupils, and a physician to reside with them, and $100 (one hundred) to himself each year.

"Sar-sarp-kin asked to be allowed to remain on the Columbia reservation with his people, where they now live, and to be protected in their rights as settlers, and, in addition to the ground they now have under cultivation within the limit of the fifteen-mile strip cut off from the northern portion of the Columbia reservation, to be allowed to select enough more unoccupied land in severalty to make a total to Sar-sarp-kin of four square miles, being 2,560 acres of land, and each head of a family or male adult one square mile, or to remove onto the Colville reservation, if they so desire; and in case they so remove, and relinquish all their claims to the Columbia reservation, he is to receive one hundred (100) head of cows for himself and people, and such farming implements as may be necessary.

"All of which the Secretary agrees they should have, and that he will ask Congress to make an appropriation to enable him to perform.

"The Secretary also agrees to ask Congress to make an appropriation to enable him to purchase for Chief Moses a sufficient number of cows to furnish each one of his band with two cows; also to give Moses one thousand dollars ($1,000.00) for the purpose of erecting a dwelling house for himself; also to construct a sawmill and gristmill as soon as the same shall be required for use; also that each head of a family or each male adult person shall be furnished with one wagon, one double set of harness, one grain cradle, one plow, one harrow, one scythe, one hoe, and such other agricultural implements as may be necessary.

'And, on condition that Chief Moses and his people keep this agreement faithfully, he is to be paid in cash, in addition to all of the above, one thousand dollars ($1,000.00) per annum during his life.

All this on condition that Chief Moses shall remove to the Colville reservation and relinquish all claims upon the government for any land situate elsewhere.

"Further, that the government will secure to Chief Moses and his people, as well as to all other Indians who may go onto the Colville reservation and engage in farming, equal rights and protection alike with all other Indians now on the Colville reservation, and will afford him any assistance necessary to enable him to carry out the terms of this agreement on the part of

Digitized by Google

himself and his people; that until he and his people are located permanently on the Colville reservation his status shall remain as now, and the police over his people shall be vested in the military, and all money or articles to be furnished him and his people shall be sent to some point in the locality of his people, there to be distributed as provided. All other Indians now living on the Columbia reservation shall be entitled to 640 acres, or one square mile, of land to each head of family or male adult, in the possession and ownership of which they shall be guaranteed and protected; or, should they move onto the Colville reservation within two years, they will be provided with such farming implements as may be required, provided they surrender all rights to the Columbia reservation.

"All the foregoing is upon the condition that Congress will make an appropriation of funds necessary to accomplish the foregoing, and confirm this agreement, and also, with the understanding that Chief Moses, or any of the Indians heretofore mentioned, shall not be required to remove to the Colville reservation until Congress does make such appropriation, etc.

"H. M. Teller,
"Secretary of the Interior,
"H. Price,
"Commissioner of Indian Affairs.
his
"X Moses.
mark.
his
"X Sar-sarp-kin."
mark.

The act of Congress of July 4, 1884, provided as follows:

"For the purpose of carrying into effect the agreement entered into at the city of Washington on the seventh day of July, eighteen hundred and eighty-three, between the Secretary of the Interior and the Commissioner of Indian Affairs and Chief Moses and other Indians of the Columbia and Colville reservations, in Washington Territory, which agreement is hereby accepted, ratified, and confirmed, including all expenses incident thereto, eighty-five thousand dollars, or so much thereof as may be required therefor, to be immediately available: Provided, that Sar-sarp-kin and the Indians now residing on said Columbia reservation shall elect within one year from the passage of this act whether they will remain upon said reservation on the terms therein stipulated, or remove to the Colville reservation; and provided, further, that in case said Indians so elect to remain on said Columbia reservation the Secretary of the Interior shall cause the quantity of land therein stipulated to be allowed them to be selected in as compact form as possible, the same when so selected to be held for the exclusive use and occupation of said Indians, and the remainder of said reservation to be thereupon restored to the public domain, and shall be disposed of to actual settlers under the homestead laws only, except such portion thereof as may properly be subject to sale under the laws relating to the entry of timber lands and of mineral lands, the entry of which shall be governed by the laws now in force concerning the entry of such lands."

It is to be borne in mind that at the time of the agreement of 1883, and at the time of the act of Congress in question, section 2079 of the Revised Statutes was in force, declaring that:

"No Indian nation or tribe within the territory of the United States shall be acknowledged or recognized as an independent nation, tribe or power with whom the United States may contract by treaty; but no obligation of any treaty lawfully made and ratified with any such Indian nation or tribe prior to March third, eighteen hundred and seventy-one, shall be hereby invalidated or impaired."

Digitized by Google

The agreement of 1883 expressly recites that what Sar-sarp-kin asked for was—

"to be allowed to remain on the Columbia reservation with his people, where they now live, and to be protected in their rights as settlers, and, in addition to the ground they now have under cultivation within the limit of the fifteen-mile strip cut off from the northern portion of the Columbia reservation, to be allowed to select enough more unoccupied land in severalty to make a total to Sar-sarp-kin of four square miles, being 2,560 acres of land, and each head of a family or male adult one square mile, or to remove onto the Colville reservation, if they so desire; and in case they so remove, and relinquish all their claims to the Columbia reservation, he is to receive one hundred (100) head of cows for himself and people, and such farming implements as may be necessary."

And after the provisions with respect to Chief Moses and his people comes that so much relied upon by the defendant in error:

"All other Indians now living on the Columbia reservation shall be entitled to 640 acres, or one square mile of land, to each head of family or male adult, in the possession and ownership of which they shall be guaranteed and protected."

The agreement itself recites that it was entered into upon condition that Congress should confirm it, and necessarily only to the extent that Congress should confirm it. Jones v. Meehan, 175 U. S. 1, 20 Sup. Ct. 1, 44 L. Ed. 49; Lone Wolf v. Hitchcock, 187 U. S. 553, 23 Sup. Ct. 216, 47 L. Ed. 299.

Looking at the agreement alone, we do not think that either party to it could have understood from its language that it was contemplated that the government was to sever its relations to such of the Indians as should remain on the Columbia reservation, any more than with those who should remove to the Colville reservation—to cease to be their guardian. On the contrary, the agreement expressly recites that the Indians were to be "protected" by the government and by it guaranteed in the possession and ownership of the respective tracts of land to be set apart to them in severalty. How could the United States afford such protection but by remaining the guardian of the Indians? We think it the plain meaning of the agreement itself that it should do so, and that no party thereto could have otherwise understood. That it was to the interest of the Indians that the government should retain such title and continue as the guardian of the Indians was recognized by the learned judge of the court below, where he said in his opinion that his conclusion had—

"been reached with much reluctance, for no doubt it would be better for the Indians to sustain the plaintiff's contention. They are not qualified to cope with the white race, and the result of this decision, should it be sustained in the higher courts, will no doubt be prejudicial to their best interests. It is to be regretted that so commendable an effort should not have been made before the agreement received the approval of Congress, or at least before the rights of purchasers had attached; but the Supreme Court has said that the courts are not concerned with these considerations."

That Congress took the same view in respect to the interest of the Indians is, we think, manifest from its confirmatory act in question, in which it provided that, should the Indians then residing on the Columbia reservation elect within the time limited in the statute (one

Digitized by Google

year) to remain on that reservation, the Secretary of the Interior should cause the quantity of land, stipulated in the agreement to be allowed them, to be selected in as compact form as possible, "the same when so selected to be held for the exclusive use and occupation of said Indians." To be "held" by whom? Obviously by the United States, their guardian, and to the end that they might be "protected" against the tricks and acts of designing persons. Such act on the part of Congress was in accord with its general policy upon the subject; and that such is its true meaning finds strong support in the fact that the act was so construed by President Cleveland in his executive order of May 1, 1886, directing:

"That the tracts of land in Washington Territory surveyed for and allotted to Sar-sarp-kin and other Indians, in accordance with the provisions of said act of July 4, 1884, which allotments were approved by Acting Secretary of the Interior April 12, 1886, be, and the same are hereby set apart for the exclusive use and occupation of said Indians; the field notes of the survey of said allotments being as follows," etc.

It is further confirmed by the interpretation put by Congress itself upon the act of July 4, 1884, by its subsequent acts of March 3, 1905 (33 Stat. 1064, c. 1479), and of March 8, 1906 (34 Stat. 55, c. 629), providing for the conveyance of the government title by patents to certain of the allottees under the agreement and act in question. The legislative construction of its own act is always potent. "If it can be gathered," said the Supreme Court in U. S. v. Freeman, 3 How. 556–564, 11 L. Ed. 724, "from a subsequent statute in pari materia, what meaning the Legislature attached to the words of a former statute, they will amount to a legislative declaration of its meaning, and will govern the construction of the first statute." And in the case of Philadelphia & E. R. Co. v. Catawissa R. Co., 53 Pa. 20, the Supreme Court of Pennsylvania said:

"If a contemporaneous construction by the Legislature of the same words can be discovered, it is high evidence of the sense intended."

That the acts of July 4, 1884, of March 3, 1905, and of March 8, 1906, above referred to, are in pari materia, is perfectly plain, for they relate to the same subject-matter and are parts of the same legislative purpose. In respect to such statutes, Sutherland, St. Const. 283, says:

"'All consistent statutes which can stand together, though enacted at different dates, relating to the same subject, and hence briefly called statutes in pari materia, are treated prospectively, and construed together, as though they constituted one act. This is true, whether the acts relating to the same subject were passed at different dates, separated by long or short intervals at the same session, or on the same day. They are all to be compared, harmonized, if possible, and, if not susceptible to a construction which will make all of their provisions harmonize, they are made to operate together, so far as possible, consistently with the evident intent of the legislative enactment."

And in Endlich on the Interpretation of Statutes, § 43, it is said:

"Where there are earlier acts relating to the same subject, the survey must extend to them; for all are, for the purposes of construction, considered as forming one homogeneous and consistent body of law, and each of which may explain and elucidate every other part of the common system to which it belongs."

Digitized by Google

The judgment is reversed, and the case remanded to the court below, with directions to overrule the demurrer to the complaint, with leave to the defendant to answer.

(161 Fed. 520.)

DELAWARE & H. CO. v. LARNARD.

(Circuit Court of Appeals, Third Circuit. May 5, 1908.)

No. 17.

1. RAILROADS—ACCIDENTS AT CROSSINGS—EFFECT OF OPEN GATES.

The fact that safety gates maintained by a railroad company at a highway crossing are open is an implied invitation to persons traveling the highway to enter upon the crossing; and, while it does not absolve them from the duty of taking reasonable precautions to avoid injury by moving trains, it qualifies that duty to the extent that they may reasonably presume that the company's servants have performed their duty in ascertaining the safety of the crossing.

[Ed. Note.—For cases in point, see Cent. Dig. vol. 42, Railroads, § 1072.]

2. SAME—NEGLIGENCE—ABSENCE OF FLAGMAN AT DANGEROUS CROSSING.

The four tracks of defendant railroad company and those of two other companies crossed a street near each other. There were yards near, and the tracks were largely used for switching purposes. Defendant maintained gates at the outer sides of the entire group of tracks; they being 224 feet apart. Plaintiff's husband and his son approached the crossing on foot, with two wagons following, loaded with lumber, which was to be loaded in a car. The gates were open, and deceased and his son went ahead as a further precaution against trains which might be approaching. When they reached the center of defendant's tracks, they saw a train approaching on one of the inner tracks and started back, when a freight train on the outer track backed, and plaintiff's husband was struck and killed by the caboose, which was being kicked back onto a switch. The son testified that the car was standing still and was started suddenly. The conductor testified that it was moving slowly, and that he stood on the rear platform of the caboose and called a warning to the deceased. *Held*, that under such evidence the jury were justified in finding that the crossing was an unusually dangerous one, and required extraordinary care on the part of defendant, and that, in view of the open gates, the failure to station a man at the crossing, either permanently or temporarily, to give warning of the movement of the switching train, was negligent.

[Ed. Note.—For cases in point, see Cent. Dig. vol. 41, Railroads, §§ 972–977, 1072.

Duty to give warning signals at crossing, see note to Chesapeake & O. Ry. Co. v. Steele, 29 C. C. A. 90.]

3. NEGLIGENCE—CONTRIBUTORY NEGLIGENCE—QUESTION FOR JURY.

The question of contributory negligence is for the jury, unless the evidence to establish such negligence is clear and uncontradicted, and such that no reasonable man could come to a contrary conclusion.

[Ed. Note.—For cases in point, see Cent. Dig. vol. 37, Negligence, §§ 279–302.]

4. RAILROADS—ACTION FOR INJURY TO PERSON AT CROSSING—INSTRUCTIONS.

In an action to recover for the death of a person killed at a railroad crossing by a switching train, a statement in the charge of the court that, if a member of the crew had been stationed at the crossing to warn persons on the highway of the movements of the train, it might have prevented the injury, was not reversible error, in connection with clear instructions as to the province of the jury and giving the claims of the

Digitized by Google

respective parties, and where the evidence was such as to warrant a finding that the failure to so station a man was negligence.

In Error to the Circuit Court of the United States for the Middle District of Pennsylvania.

James H. Torrey, for plaintiff in error.
Paul Sherwood, for defendant in error.

Before DALLAS, GRAY, and BUFFINGTON, Circuit Judges.

GRAY, Circuit Judge. The material facts disclosed by the record brought before us by the writ of error in this case are as follows:

The defendant in error (hereinafter called the plaintiff) brought her action in the court below against the plaintiff in error (hereinafter called the defendant) to recover damages for the death of her husband, who was killed while walking on the highway across the tracks of the defendant company, near the Dickson City station, in November, 1906. The highway in question was called Boulevard avenue, and ran nearly north and south where it crossed the tracks of the defendant company, and that of two other railroad companies in close proximity thereto. From a northerly direction, it first crossed, at right angles, the Delaware, Lackawanna & Western Railroad, which, at that point, ran due east and west. It then continued through an open space of nearly 99 feet, to the tracks of the Ontario & Western Railroad, where there were two tracks, and a switch at the crossing branching out towards the west into a number of yard tracks, and a depot building on the northern side of said tracks and on the easterly side of said avenue, not more than 20 or 30 feet therefrom. These tracks, as well as those of the defendant company, crossed the avenue, not at right angles, as those of the Delaware, Lackawanna & Western did, but somehow diagonally, nearly (though not quite) in a northeasterly and southwesterly direction.

After crossing the tracks of the Ontario & Western, the avenue crosses an open space of nearly 58 feet, between the latter tracks and those of the defendant company. These tracks are four in number, the north and south, or the two outside ones, being freight tracks, and those in between passenger tracks. These four occupy a space of 51 feet across. It was at the crossing of the northerly track that the accident in question happened. In the space last mentioned, between the Ontario & Western tracks and those of the Delaware & Hudson, about 20 or 30 feet easterly from the avenue, stood a gatehouse, high enough for the gatekeeper to look over the tops of cars on the several railroads. It appears from the evidence that a gatekeeper was employed by the defendant company, to operate two safety gates which stood to the north of the Delaware, Lackawanna & Western and south of the Delaware & Hudson railroad. There were thus only two gates, one to the north and one to the south of this group of railroads, the distance between the two being about 224 feet.

On the day in question, the plaintiff's husband, with his son, a man about 24 years of age, were coming south on the Boulevard avenue, accompanying two wagons loaded with lumber, owned by the deceased, who was in the lumber business. The wagons were on their

Digitized by Google

way to the south side of the defendant company's railroad, to load the lumber onto cars standing on a switch of the defendant company on the said south side, a little to the east of the avenue. As the teams approached the tracks of the Delaware, Lackawanna & Western Railroad, the gates were up, but the deceased and his son, as a matter of greater precaution, as testified by the son, walked across these tracks, and the head team followed them, into the open space between these tracks and those of the next railroad. According to the testimony of the son, the team was halted in this space while he and his father walked on across the tracks of the Ontario & Western, and onto and across the northern track of the defendant company. He says, as they were stepping from this track, they saw a passenger train coming from the west on the next track but one of defendant's road, and started back onto the freight tracks from which they had just stepped, when a train of cars, which they had observed upon their left hand and close to the crossing, started with a jerk towards them, striking his father with fatal result, he himself just escaping. There is some testimony to corroborate this of the son, especially as to the sudden movement or jerk of the freight train that was being backed across the highway.

The testimony of the defendant is that a draft of 19 freight cars, with a caboose attached at the rear, had, a short time before, been drawn east of the crossing, in order to back onto certain switches, both east and west of said crossing. That, in coming back, and within a few feet of the crossing, while proceeding slowly, the caboose was uncoupled from the train, in order that it might be shoved back and across a switch west of the crossing, before the rear of the freight train reached it. To accomplish this manœuver, or "kick-back" as it is sometimes called, it was either necessary, if the train were moving at sufficient speed, to stop or slow up, so as to allow the caboose to get away from it, or, if the train was not going fast enough at the time of the uncoupling, to give a shove or start for a little distance, so that the caboose might have the requisite momentum to carry it past the switch ahead of the train. It does not appear with entire certainty how, according to defendant's testimony, the manœuver was accomplished. The plaintiff's testimony, however, seems positive that the train was standing just east of the siding, and started back with a sudden jerk when four or five feet away from the deceased. The plaintiff's counsel has argued that the latter may have been what really occurred, and the sudden acceleration of speed just at the crossing, was equivalent in its results, and might have been mistaken by plaintiff's witnesses for a sudden start from a state of rest. The plaintiff's witnesses, however, were positive that the train was standing still within a few feet of the crossing, and started back with a sudden jerk, which caused it to strike the deceased.

We are not prepared to say that there was no evidence sufficient to support one or the other of these theories propounded by the plaintiff, whatever may be our view as to the weight of the testimony in contradiction of them. Defendant's testimony established the fact that the train was adequately manned with a conductor and brakeman. These all testify that the train, when it started back, continued to move

Digitized by Google

at a slow rate of speed, uniformly and without acceleration, until the time of the accident, and this testimony is corroborated by that of two engineers or employés on engines standing on the tracks of the other roads alongside of the defendant's. The conductor also testifies that he was at the rear end of the caboose, as it approached the crossing, and saw the deceased standing on the track, and shouted at him twice before the collision, though the son testified that he heard no such warning or other signal. There was also the usual conflict of testimony between those on the train and some who were standing by, as to the hearing of any signal by a bell or whistle, and little importance is to be attached to the testimony of those who can merely say that they did not hear what others positively say they did hear.

There were other facts, however, of a pregnant character, which properly entered into the consideration of the case by the jury, such as, that when deceased and his son and the first team approached the railroads, the safety gate was open, and there was thus presented what the law and common sense concur in designating an "invitation" by those in charge of the railroads, to the deceased and his teams, to enter upon the crossing. While such invitation did not absolve those entering upon the railroad enclosure from the duty of taking reasonable precautions to be watchful as to possible danger from moving trains, it certainly qualifies that duty to the extent that there might be a justifiable presumption by the user of the highway, that the railroad's servants had performed their duty in ascertaining the safety of the crossing. There is the further testimony of the son, that the deceased and himself had gone ahead of the timber wagons, notwithstanding the open gate, for the very purpose of assuring themselves as to the safety of the crossing, and that they stopped, looked and listened before crossing any of the tracks. There is also the evidence tending to show that this crossing occupied by this group of important railroads, upon which there was a heavy freight and passenger traffic and a constant movement backwards and forwards of the engines and cars of three different railroads, was a more than usually dangerous one. If this were so, there was in consequence imposed upon the companies, so far as they controlled it, as well as upon the user of the highway, a duty of care proportionate to these circumstances of danger.

Nor can we say that the jury would be unwarranted in coming to the conclusion, upon all the evidence, that, by reason of the implied invitation of an open safety gate, the defendant company owed a duty of greater care to those who were on its tracks, than was performed by such warning as could be given by the person stationed at the rear of a backing freight train. As we have said, three important railroads were transacting, not only the usual business of running regular freight and passenger trains across this highway, but, there was also a constant movement of engines and cars on all of them, backwards and forwards across it, incident to the shifting in connection with stations and freight yards.

It was with reference to an admitted situation of this character, and the contention by plaintiff's counsel, that the reasonable care required of the defendant company, under the circumstances, demanded

Digitized by Google

some other precaution than was actually taken to preserve those who were legally using this crossing, from the dangers arising from such a situation, that the court below used the language to which exception is taken in the first specification of error. As this specification presents what seems to us the most serious question in the case, we quote it in full, as follows:

"First. The learned court erred in that part of its charge to the jury which is as follows: 'It is contended, again, that the company should give warning, but it is answered in reply, that that also was done, not only by the whistle and the bell, and the continual ringing of the bell, but, as testified by the conductor, by calling out, by standing there on the hind platform of the caboose, and endeavoring to give a warning; that he said he did give, when the train was still 150 feet away, and again called out a second time when it was too late. Now, was this sufficient? One party says "Yes," and the other "No." The matter is for you to consider and settle in your own minds. I can conceive that if there had been a brakeman or a flagman or conductor, standing there, instead of being upon the train, that a warning might have been given that would have been more effective. It is true that all the men of that train were occupied; one man had been dropped off—Lannan—in order to protect the train from the south as it crossed over; another had been dropped at the upper end on the other side of the crossing to protect the train from anything in that direction; the middle brakeman was on the box car next to the caboose not only to cut it off from the rest of the train, but to receive signals, if any were required in order to stop the train, and to pass those signals on to the engineer; and the conductor was on the caboose in a position to give any warning as it approached. Still, if there had been another man, either a flagman permanently established at that crossing, to give warning, or temporarily supplied at the time, as I say, I can conceive that that would have been a safeguard of the place that might have prevented this accident.'"

A careful examination of the testimony convinces us that the jury might warrantably believe that the crossing here in question presented more than the usual dangers. While the evidence shows that the train that backed over the crossing was equipped with a sufficient crew to properly handle it, it does not appear that any one of them was specially designated for, or specially stationed at, this crossing, for the purpose of warning those who were using the highway, and we may presume that the crew were charged only with those duties which concerned the handling and movement of the train, and were probably necessary for that purpose, without reference to the guarding of crossings. However that may be, it does not seem that any member of the train crew was stationed at this crossing, for the purpose of protecting those who were using it, and it seems to us there was evidence before the jury, from which they might reasonably infer that there was the absence of reasonable care on the part of the defendant company, in not providing a flagman or watchman for that purpose, and that this, taken in connection with the open gate, was such a dereliction of duty as supported the charge of negligence made by the plaintiff.

It was in dealing with this feature of the case, that the learned judge of the court below said:

"I can conceive that, if there had been a brakeman or a flagman or conductor standing there, instead of being upon the train, that a warning might have been given that would have been more effective. * * * Still, if there had been another man there, a flagman permanently established at that

Digitized by Google

crossing to give warning, or temporarily supplied at the time, as I say I can conceive that that would have been a safeguard of the place that might have prevented this accident."

We do not think this portion of the charge, in the connection which we have explained, constituted error. It had relation to the facts of the case and to the situation as disclosed by the testimony. While dissociated from the context the language just quoted may seem to intimate a personal opinion on the part of the trial judge, it is in reality only a suggestion of what might be believed in plaintiff's view of the testimony. It is immediately preceded, after stating what in substance is the controversy between the parties, by the instruction to the jury, that the matter was for them to consider and settle in their own minds, and is followed immediately and throughout the charge by statements of the other side of the controversy, and clear instructions to the jury as to their province in dealing with the facts of the case, and insistence upon their plenary duty and power to deal with them according to their own judgment.

Considering the charge as a whole, it did not permit the jury to embark upon a sea of speculation, as contended for by the plaintiff in error, nor permit them to hold that the company was required to place "such number of employés at the crossing, and so stationing them as to make it a physical impossibility for the plaintiff (deceased) to go upon the track in front of the cars." The inference permitted to the jury was that the absence of such a guard or flagman, under the circumstances, was negligence on the part of the company, and that the presence of such a precaution would probably (not necessarily) have prevented the accident, and such an inference was not, in our opinion, upon all the evidence, an unwarranted one. It is not necessary to show that the presence of such a guard or watchman would have prevented the accident, but only that, under the circumstances, it was a precaution which due care required to be made, and that it probably would have prevented the injury complained of. In dealing with the question, what inference upon a given state of facts it is permissible for a jury to draw, no hard and fast rule can be laid down for the guidance of a trial judge. The circumstances of the particular case, as well as the rules of law that may be applicable thereto, must furnish the ratio decidendi in such cases, and thus viewing the action of the court below, we think no right of the defendant has been violated. On the contrary, the charge throughout was as favorable to the defendant, as it had the right to demand.

The second and third assignments of error relate to the refusal of the court to give the jury binding instructions, that upon all the evidence they should find a verdict for the defendant, the contention of the learned counsel for the defendant being that there was no evidence to support the charge of negligence against the defendant, or, assuming that such negligence was shown, it clearly appeared from all the evidence, that the deceased was guilty of contributory negligence. The first branch of this contention, involving the propriety of the submission of the question of defendant's negligence to the jury, has been disposed of by what we have already said.

Digitized by Google

The general rule is that the question of contributory negligence is one for the jury, and can only be departed from where the evidence to establish such negligence is clear and uncontradicted, and such that no reasonable man could come to a contrary conclusion. The same principles are therefore involved in considering the duty of the court, whether the question relates to the negligence of the defendant, or the contributory negligence of the one suffering the injury.

We think little is required to be said as to this latter branch of defendant's contention. To have withdrawn the case from the jury on the ground that deceased clearly contributed to his own injury by his own negligence, would have been to ignore entirely the testimony of the son of the deceased, of several of the witnesses, and also certain facts and presumptions belonging to the plaintiff's side of the case; such facts, for instance, as the open gate, the presence of engines on the various tracks, with their escaping steam, and the approach of a train on an adjoining track of defendant's road, and the presumption that ordinarily arises, that a reasonable being will take due precautions to guard against manifest danger to life and limb, a presumption reinforced in this case by the uncontroverted fact that the deceased and his son had proceeded through the open gate and were crossing the various tracks of the different railroads, for the very purpose of ascertaining whether the way was clear for the teams they had in charge. With the weight of testimony on either side, the court below had, of course, nothing to do, but, after a careful examination of all the evidence, we are of opinion that it did not err in its refusal to withdraw the case from the jury.

The fourth specification of error regards what the court said as to defendant's point, that the fact of the safety gates being open, had a "tendency at least to give the traveler the impression that all is safe, and thereby blunt the edge of his caution," the language of the court being as follows:

> "That applies a good deal more when a person is driving than when he is walking because, as I have said to you, and as you well know, it is a good deal more difficult in one case to look about you and govern your action, than it is in the other. It is true, however, in both cases, that if a safety gate is there, and the safety gate is up, the natural tendency of it is to throw one off ordinary precaution; and you may take that into consideration, if the facts are such as suggested in this point, in disposing of the questions which are involved here."

It may be gathered from what we have already said, that, in our opinion, this is a correct statement of the law. The suggestion made by the learned trial judge, that a greater responsibility rests upon one who walks across the railroad track, where the gate is open, than upon one who drives across, was altogether in favor of the defendant. We find, therefore, no error in the judge's charge in this respect, and the fourth assignment is without merit.

The fifth assignment of error relates to certain portions of the court's charge regarding the measure of damage. No argument has been presented in plaintiff's brief, in regard to this assignment, but this court has carefully considered that portion of the charge covered by it, and finds no error therein.

Digitized by Google

It only remains to say that the charge, which was an elaborate one, fairly summarized the evidence on both sides for the benefit of the jury, and correctly stated the principles of law that should govern its deliberations. It was eminently fair to the defendant.

The judgment below is hereby affirmed.

(161 Fed. 527.)

STANDARD STEEL CAR CO. v. McGUIRE.

(Circuit Court of Appeals, Third Circuit. May 13, 1908.)

No. 16.

1. MASTER AND SERVANT—SERVANT OF INDEPENDENT CONTRACTOR—INJURIES—METHOD OF WORK.

Where the servants of a contractor for the erection of an addition to defendant's car shops had been accustomed to use the runway of a traveling crane in the mill to move scaffolding from one truss to another, which method of work had been pursued in the presence of defendant's superintendent, without objection, it would be considered as having been followed with defendant's express permission.

2. NEGLIGENCE—CARE REQUIRED.

Where defendant had consented to the use of a crane runway in defendant's mill by plaintiff, a servant of an independent contractor, in moving scaffolding from one truss in an addition to the mill to another, plaintiff in so using the runway was not a trespasser, but was within the class of persons present in dangerous premises by the owner's express permission, as to whom defendant was chargeable with an affirmative duty to take special precautions against injury that might happen to plaintiff by reason of the operation of the crane on that part of the runway on which he was standing.

[Ed. Note.—For cases in point, see Cent. Dig. vol. 37, Negligence, § 20.]

3. SAME—ASSUMED RISK.

Where plaintiff, a servant of an independent contractor, was permitted with defendant's consent to use the runway of a traveling crane in altering the position of scaffolding in defendant's mill, plaintiff did not assume the risk of defendant's negligence in operating the crane on such portion of the runway where plaintiff was standing, without notice to him, though plaintiff was also bound to guard himself against obvious dangers.

[Ed. Note.—Assumption of risk incident to employment, see note to Chesapeake & O. R. Co. v. Hennessey, 38 C. C. A. 314.]

4. SAME—ANTICIPATED DANGER.

Where defendant had invited the servants of an independent contractor to use a traveling crane runway in altering the position of scaffolding in the mill, defendant was bound to anticipate the presence of such servants on the runway and to guard against dangers incident thereto.

5. SAME—QUESTIONS FOR JURY.

In an action for injuries to a servant of an independent contractor by being struck by defendant's traveling crane, used with defendant's permission for the removal of scaffolding from one place in the mill to another, whether defendant was negligent in failing to use reasonable precautions to prevent such injury, and whether plaintiff was negligent, *held* for the jury.

[Ed. Note.—For cases in point, see Cent. Dig. vol. 37, Negligence, §§ 279–346.]

Digitized by Google

In Error to the Circuit Court of the United States for the Western District of Pennsylvania.

W. W. Smith, for plaintiff in error.
L. E. Porter, for defendant in error.

Before DALLAS, GRAY, and BUFFINGTON, Circuit Judges.

GRAY, Circuit Judge. The defendant in error, who was plaintiff below and hereafter called the plaintiff, recovered a verdict in an action of trespass for personal injuries claimed to have been caused by the negligence of the plaintiff in error, which was defendant below and hereafter called the defendant. The material facts of the case, as disclosed by the record, are as follows:

Defendant was engaged in the manufacture of steel cars, at Butler, Pa. Plaintiff was an employé of McClintock Marshall Construction Company, an independent contractor engaged in building for the defendant an addition to its shop. The original shop, which was of very large dimensions, was as to its frame at least, constructed of iron, as was also the addition under course of construction, one side of the old shop forming one side of the addition. This side had been so stripped as to leave only the framework of iron, upon the top of the columns of which, iron trusses in sections about 24 feet long by 9 feet deep were being placed, the columns of the old building serving also for that side of the new. These columns were 50 feet in height. The trusses were raised to the top of the column, and temporarily attached, but had to be riveted, which was done by the use of pneumatic tools, the compressed air for which was furnished by the defendant. Against the inside of these columns, on both sides of the shop, were placed runways, which were about 12 inches in width, and on which were tracks carrying trucks at either end of traveling cranes. These runways were 25 or 30 feet from the ground, and as the building was some 1,800 feet in length, there were several of these cranes in use.

The contractor erecting the addition referred to, had two gangs of four men each engaged in riveting the trusses to the tops of the columns, each gang working independently of the other. In the prosecution of their work, it was necessary for the men to stand upon a scaffolding. This scaffolding, which was about the length of the truss, say 24 feet, was constructed with what were called needle beams, or sticks of that length, suspended from the top of the truss by ropes, and upon which the floor of the scaffold was laid. When so suspended, the scaffold was 12 feet or more from the top of the crane runway, which lay directly underneath it and against the columns upon which the work was being done. When the work of fastening one section of the truss was finished, it was necessary to move further on to the adjoining space between two columns, to fasten another. For this purpose, two of the men, during the five days they had been so employed, would drop down onto the crane runway, and the scaffolding sticks were lowered with the ropes by the two men who remained on the bottom strut of the truss. The ropes were then dropped and coiled up by the men on the runway, and carried with the scaffolding sticks

Digitized by Google

along to the next truss, where the rope was thrown up to the men on the truss, and the scaffolding sticks hoisted into place.

This was not only the obvious and convenient method of proceeding with the work, but no other seemed to have suggested itself, that would not have involved much trouble and great delay in the prosecution of the work in hand, and it was in evidence that defendant's superintendent was on the floor of the mill, from where he could and did observe, without objection, this method of moving the scaffolding. The scaffolding had been so moved several times a day for the five days that this work had been going on. During this time, it happened more than once that the crane moved along the runways at a time when the plaintiff and another workman were walking thereon, while engaged in making one of these movements of the scaffolding. In each case, they were warned of the approach of the crane by several distinct and loud signals from a bell controlled by the crane operator. On the day of the accident, however, while plaintiff, together with his co-employé, was carrying one of these needle beams along the runway from one truss to the other, the crane approached without any signal being given by bell or otherwise, and without warning from any one, and struck and ran over the plaintiff, who had one end of a needle beam on his shoulder, with his back turned from the direction in which the crane was coming. Plaintiff testifies that, after getting down on the runway, before beginning to move the scaffold, he looked up and down the runway to see if it were clear. The crane in question was operated by a boy stationed in a cage hanging from the end of the crane on the opposite side of the mill to that where the plaintiff was working. It was in evidence on the part of defendant, that printed instructions were given to its own workmen not to go upon the crane runways, but no such instructions or other warning in this respect were given to the contractor or to his employés engaged in doing this work for the defendant.

It was also testified, by the boy who operated the crane from the cage hanging below it on the opposite side of the mill, that he had general instructions to look out for the defendant's employés at work upon the floor of the mill below him, but was not instructed to look out for those engaged on the trusses, and who might be on the crane runway; that at the time of the accident he was watching the men on the gound, and not thinking of giving any warning to anybody else. "I wasn't thinking of giving any warning to anybody else but the men on the ground." He also testified that he did not sound the bell at the time of the accident, which on previous occasions had given warning of the approach of the crane to those on the runway. There was testimony tending to show that the work upon which plaintiff was engaged was done in the presence of a superintendent and general manager of defendant, and that the scaffolding had been moved in the manner described about 12 times. It is not in dispute that this use of the crane runway by the men when moving the scaffolding, was known to those in control of defendant's mill, or that no protest or objection on their part was made thereto. There was certainly testimony tending to show acquiescence on the part of the defendant, in this use of the crane runway, for the purpose and in the manner described, and

Digitized by Google

also that any other method of moving the scaffolding would have been exceedingly inconvenient, if not impracticable. At the conclusion of plaintiff's testimony, defendant moved for a nonsuit, which was refused, and before the case was submitted to the jury, a request for binding instructions was submitted by defendant's counsel, which was also refused.

The principal assignment of error is to the refusal of the court to charge the jury that, under the pleadings and evidence in the case, the verdict must be for the defendant. Several of the other assignments of error may be grouped under this first assignment. We have therefore carefully considered all the evidence in the case and summarized it as above.

We agree with the learned judge of the court below, that the method of moving the scaffolding from one truss to another, had been adopted by the contractors in the necessary discharge of their work, in the presence of the superintendent and by what, under the testimony must be considered the express permission of the corporation itself. We think, therefore, it must clearly appear that the plaintiff, as an employé of the contractor, engaged at defendant's request in constructing the addition to its mill, was not a trespasser upon defendant's premises generally, or upon the crane runway in particular, under the circumstances shown by the evidence; that while at work on the trusses at the tops of the columns, and also in the incidental and temporary use of the crane runway immediately underneath the same, he was in the class of those who are present on dangerous premises, by the express invitation of and for the purposes of their owner, upon whom, on that account, the law imposes a special duty of care to guard the one thus present from the dangers incident to the situation.

In this state of the case, the duty imposed upon the defendant required special precaution against injury that might happen to the plaintiff by reason of the operation of the crane on that part of the runway upon which he might be standing. Upon reasonable precautions to be taken by the defendant in this regard, we think the plaintiff had a right to rely. The more so, perhaps, that there was testimony tending to show that on the three or four previous occasions, the approach of the crane, while those engaged in riveting the trusses happened to be upon the runway, was signaled by a loud sounding bell. While plaintiff was not relieved from the duty of care on his part to guard himself against obvious dangers, he did not assume, as contended by defendant, all the risks of the situation as being incident to his employment, and certainly not the risk of defendant's negligence and want of care.

The court below was therefore clearly right in refusing defendant's point embodied in his third assignment of error, to wit, that defendant was not bound to anticipate the presence of plaintiff on the crane runway at the time of his injury. Having, under its contract for the repair of its mill, invited the plaintiff and others into situations that would be dangerous, if its operations were continued while the repairs were going on, if it decided, under the circumstances, to continue those operations, it was bound to reasonably guard against the dangers

Digitized by Google

incident thereto, or, in the felicitous language of the learned trial judge:

"It assumes an obligation that the operations of its mill will be subordinated in a reasonable degree to the operations made necessary on the part of the contractor, in order to perform those repairs."

Whether there was a lack of such care as amounted to negligence on the part of the defendant, was a question properly to be submitted to the jury. This, and the question whether the method adopted for moving the scaffolding, which required that some of the workmen during the process of removal should stand upon the crane runway, was a reasonable discharge of their duty under the premises, or involved contributory negligence on the part of the plaintiff, together with other questions raised by the defendant, were properly submitted to the jury by the learned judge of the court below. The exceptions to specific portions of the charge of the court below, covered by the several assignments of error, have been dealt with in what we have said in our general discussion of the case, and do not require more particular consideration.

The judgment of the court below is affirmed.

(161 Fed. 531.)

INDIANA & ARKANSAS LUMBER & MFG. CO. et al. v. MILBURN et al.

(Circuit Court of Appeals, Eighth Circuit. April 18, 1908.)

No. 2,625.

1. TAXATION—TAX LIEN—FORECLOSURE—NATURE OF PROCEEDING.

The overdue tax suit for the foreclosure of a tax lien, authorized by Acts Ark. 1881, p. 63, is a judicial proceeding, and the sale pursuant thereto is a judicial sale.

2. SAME—MISDESCRIPTIONS.

Misdescriptions of land, which would be fatal to an ordinary tax proceeding, do not render a sale pursuant to a judgment in an overdue tax suit, authorized by Acts Ark. 1881, p. 63, invalid after confirmation.

3. SAME—LIMITATIONS.

An attack on the sale of land under a decree in an overdue tax suit is barred by the five-year statute of limitations prescribed by Kirby's Dig. Ark. § 5060.

[Ed. Note.—For cases in point, see Cent. Dig. vol. 45, Taxation, § 1588.]

4. JUDICIAL SALE—VACATION—POWER.

A court has power to vacate an order of confirmation of a judicial sale at the same term at which it was rendered.

5. TAXATION—TAX SALES—CONFIRMATION—EFFECT OF ORDER.

After various decrees and orders, and vacations thereof, in proceedings for the sale of land for the nonpayment of taxes, it appeared that the money paid by the purchasers had been distributed and was beyond their reach; and, the purchasers having neither money nor deeds to the land, a chancery court directed the commissioner to make a statement showing his disposition of the proceeds, and, this being done, confirmed the report of sales and ordered the commissioner to execute deeds to purchasers, conveying only such title as the decree or decrees were competent to pass. *Held*, that such order only confirmed sales of lands made to individuals, and did not apply to lands struck off to the state.

Digitized by Google

6. SAME—NECESSITY OF CONFIRMATION.

A sale of land for taxes pursuant to a decree in an overdue tax suit, authorized by Acts Ark. 1881, p. 63, vests no title in the purchaser until confirmation.

7. SAME—LIMITATIONS.

The statute of limitations does not commence to run in favor of a purchaser's title to land purchased pursuant to a decree in an overdue tax suit, authorized by Acts Ark. 1881, p. 63, until confirmation of the sale.

[Ed. Note.—For cases in point, see Cent. Dig. vol. 45, Taxation, §§ 1593–1595.]

8. SAME—QUIETING TITLE—LACHES.

Where land in controversy was wild and uncultivated, and neither complainants, the fee owners, nor the defendants, claiming under a tax sale made in 1881, were in possession, and defendants, aside from paying taxes, did nothing with reference to the land from a sense of security caused by complainants' inactivity, complainants were not barred by laches for maintaining a suit to quiet title as against defendants' alleged claim.

[Ed. Note.—For cases in point, see Cent. Dig. vol. 45, Taxation, §§ 1593–1595.]

9. SAME—VACATION OF TAX SALE—CONDITIONS.

Where defendants had paid taxes on land purchased at a tax sale for many years, complainants were only entitled to a decree setting aside such sale on condition that they reimburse defendants for the tax payments so made.

[Ed. Note.—For cases in point, see Cent. Dig. vol. 45, Taxation, § 1612.]

Appeal from the Circuit Court of the United States for the Eastern District of Arkansas.

H. F. Roleson and N. W. Norton, for appellants.

T. E. Hare (Hunsdon Cary, on the brief), for appellees.

Before HOOK and ADAMS, Circuit Judges, and CARLAND, District Judge.

HOOK, Circuit Judge. The Milburns, as fee-simple owners, sued the Indiana & Arkansas Lumber & Manufacturing Company to quiet their title to a tract of land in Crittenden county, Ark., and obtained a decree from which the defendant took this appeal. The title of defendant which was attacked was based upon a sale under a decree of a local chancery court in a suit brought in 1881 by the state, on the relation of the county, for the enforcement of delinquent taxes. Other lands were also involved in that suit and sold at the sale; but the particular tract in question here was struck off and certified to the state for lack of other bidders. The state afterwards granted it to the board of directors of St. Francis levee district, which in turn conveyed it to defendant. Complainants assert that no title passed by the sale to the state, because (a) of fatal misdescriptions of the land at various stages of the suit; (b) when the sale was made there was no decree authorizing it, all decrees of the chancery court having been previously vacated; and (c) there was no confirmation of the sale.

The overdue tax suit was authorized by an Arkansas statute (Acts 1881, p. 63). It was a judicial proceeding, and a sale pursuant thereto was a judicial one. Neal v. Andrews, 53 Ark. 445, 448, 14 S. W. 646. It is true there were such misdescriptions of the land as would have

Digitized by Google

been fatal in an ordinary tax proceeding (Salinger v. Gunn, 61 Ark. 414, 33 S. W. 959; Cocks v. Simmons, 55 Ark. 104, 17 S. W. 594, 29 Am. St. Rep. 28; Montgomery v. Birge, 31 Ark. 491; Crane v. Randolph, 30 Ark. 579), but not so in a judicial proceeding followed by a judicial sale and confirmation (Doyle v. Martin, 55 Ark. 37, 17 S. W. 346). Besides this, complainants' attack on the sale upon the ground of misdescription of the property was barred by the five-year statute of limitation (Kirby's Dig. § 5060) long before the suit to quiet title was begun.

As to the other objections to defendant's title: There is much confusion in the record of the overdue tax suit, arising from the number of decrees and orders confirming the sales that were entered, and decrees and orders setting them aside. But the decree upon which defendant's title must rest, if it has basis at all, is that of December 23, 1882. The sales under that decree were confirmed at a subsequent term of court; but shortly thereafter, and before the term ended, the order of confirmation was vacated, and the prior decree was itself set aside for want of jurisdiction, though the jurisdictional defect does not appear in the record before us. In view of our conclusion upon the third ground of attack on defendant's title, we need not consider whether the decree of December 23d was lawfully annulled, or whether the order vacating it was void because made at a subsequent term. The facts remain that the court vacated the order of confirmation at the same term it was rendered, its power to do so cannot be doubted, and no confirmation was afterwards had of the sale of the land involved in the present suit. Defendant relies upon a confirmation order made in 1885, about two years after the commissioner's report of sales was presented to the court; but we think that order clearly related to other lands sold to individuals, and not to those struck off and certified to the state for want of bidders. After various decrees and orders, and vacations thereof, were entered of record, it appeared that the money paid by purchasers had been distributed and was beyond their reach. They had neither money nor deeds. The chancery court, therefore, directed the commissioner to make a statement showing his disposition of the proceeds, and, this being done, confirmed the report of sales, and ordered him "to execute deeds to purchasers, conveying only such title as the decree or decrees were competent to pass." That this was not intended to apply to lands struck off to the state appears from the fact that it was not required to, and did not, pay the commissioner the amount of tax liens adjudged against them (Acts 1881, pp. 69, 70, §§ 10, 12), and instead of a deed to the state, as was required to be given individual purchasers, there was merely provision for a certificate by the commissioner to the clerk of the county, whose duty it was to send copies to certain state officers. Doyle v. Martin, supra. It seems clear that the confirmation relied on was solely for the benefit of those purchasers whose money had been paid and distributed, and who, therefore, sought deeds for what they bought.

What, then, is the effect of the lack of confirmation? In Neal v. Andrews, supra, it was held that when lands were struck off to the

Digitized by Google

state confirmation was as necessary as in the case of sale to an individual. The court said:

"The sales in these cases conferred no title upon the state, for the reason that they were not confirmed by the chancery court, and the state is only a preferred bidder until confirmation which is necessary to complete her title."

In Apel v. Kelsey, 47 Ark. 413, 419, 2 S. W. 102, 103, it was said:

"Now, a judicial sale passes no title until it is confirmed; and confirmation will not be presumed, but must be shown. The court is the vendor, and what takes place before final approval is in the nature of a bid which may be accepted or rejected."

According to these decisions, which control us in a case of this kind, there was no completed sale until confirmation. Consequently the statute of limitations did not commence to run. In Cowling v. Nelson, 76 Ark. 146, 150, 88 S. W. 913, 914, it was said:

"This court has held that the five-year statute does not apply to judicial sales, unless they are confirmed, because there is no sale until that act. Lumpkins v. Johnson, 61 Ark. 80, 32 S. W. 65; Morrow v. James, 69 Ark. 539, 64 S. W. 269. When confirmed, and the court has jurisdiction over the parties, the five-year statute runs in favor of the purchaser at such sale against the parties thereto, although the sale is void. It is a statute of repose. and, if valid, the purchaser needs no limitation to ripen his title, and the manifest purpose of the Legislature was to apply it to avoid sales within the limitations mentioned."

Nor can the doctrine of laches defeat complainants' suit. The land in controversy was wild and uncultivated, neither party was in possession, and, aside from paying taxes, defendant did nothing upon the land, from a sense of security caused by complainants' inactivity. The mere payment of taxes gave no title to the land. Rannels v. Rowe, 74 C. C. A. 376, 145 Fed. 296; Penrose v. Doherty, 70 Ark. 256, 67 S. W. 398. There is another matter. The defendant, relying upon a course of judicial proceedings, paid taxes for a period covering many years, and so performed an obligation to the state which rested upon the true owners of the land. The land having greatly appreciated in value, the owners now call upon a court of equity to clear their title; but, before obtaining what they seek, they themselves should be required to do justice. To the entry of a decree in favor of complainants the trial court should attach the condition that within a specified time they reimburse defendant for the amount of its tax payments as ascertained by the court, and if they make default their bill should be dismissed.

The decree is vacated, and the cause is remanded for further proceedings in conformity with this opinion.

Digitized by Google

(161 Fed. 535.)

MUTUAL RESERVE LIFE INS. CO. v. HEIDEL.

(Circuit Court of Appeals, Eighth Circuit. March 2, 1908.)

No. 2,697.

1. INSURANCE—PREMIUM—DELIVERY OF POLICY ACKNOWLEDGMENT OF PAYMENT OF FIRST PREMIUM.

The delivery of an insurance policy which recites that the company agrees to pay the indemnity in consideration of the first annual premium of $145.45 to be actually paid in cash on or before its delivery, and that the contract shall not take effect until the delivery of the policy and the payment of the first premium, is an acknowledgment of the payment of the premium, and the delivered policy is competent evidence of that fact.

2. SAME—ACKNOWLEDGMENT ESTOPS FROM AVOIDING CONTRACT FOR NONPAYMENT, BUT IS REBUTTABLE EVIDENCE OF PAYMENT ON OTHER ISSUES.

An acknowledgment of the payment of the first premium conclusively estops the company from avoiding the policy for the failure of the insured to pay the first premium when due. But it does not estop it from proving by written contract made before or at the time the policy was delivered that an extension of time for the payment of a part or of all of the first premium to specific dates was given and an agreement made that, if the deferred payments were not then made, the insurance should cease, and the policy be forfeited.

3. SAME—EXTENSION OF TIME OF PAYMENT OF FIRST PREMIUM WAIVES FORFEITURE FOR NONPAYMENT IN ABSENCE OF EXPRESS CONTRACT TO CONTRARY.

An extension of the time of payment of the first premium without a written agreement at or before the delivery of the policy, or a subsequent contract for a valuable consideration, that the insured shall make the deferred payments at specific times and that if he fails to do so the insurance shall cease, or the policy be forfeited, waives all forfeiture for nonpayment of every part of that premium.

[Ed. Note.—For cases in point, see Cent. Dig. vol. 28, Insurance, § 914.]

4. APPEAL AND ERROR—REVIEW—HARMLESS ERROR—TRIAL—REJECTION OF ADMISSIBLE EVIDENCE FATAL, THOUGH RECORD SHOWS IT FUTILE IF RECEIVED.

The fact that it appears from the record of a trial wherein evidence was erroneously rejected that such evidence would have been futile does not show that its rejection was not prejudicial, because the proposer might have introduced other evidence or have otherwise changed his course at the trial if his rejected evidence had been received, and the court had ruled accordingly.

[Ed. Note.—For cases in point, see Cent. Dig. vol. 3, Appeal and Error, §§ 4189–4196.]

5. TRIAL—RIGHT RULINGS ESSENTIAL TO LAWFUL TRIAL—ERROR PRESUMPTIVELY PREJUDICIAL—NEW TRIAL ONLY REMEDY.

Right rulings at the trial are essential to a trial according to the course of the common law. Errors are presumed to be prejudicial. It is only when it appears beyond doubt that they are not so that they may be disregarded. The only remedy for prejudicial error in a trial at law in a national court is a new trial. The appellate court cannot re-examine the facts and render the judgment it deems right.

(Syllabus by the Court.)

In Error to the Circuit Court of the United States for the Eastern District of Missouri.

Digitized by Google

J. Lionberger Davis (Jones, Jones, Hocker & Davis and S. T. Tyng, on the brief), for plaintiff in error.

Clark Varnum (W. H. Cocke and W. Hall Trigg, on the brief), for defendant in error.

Before SANBORN and ADAMS, Circuit Judges, and PHILIPS, District Judge.

SANBORN, Circuit Judge. On June 10, 1901, Gustave Heidel surrendered to the defendant a policy of life insurance for $5,000 which had been issued to him in 1882, and the defendant delivered to him a new policy, whereby it promised to pay, subject to certain conditions and stipulations, to Nettie Heidel, on his death, $5,000. Heidel died on April 29, 1902. Nettie Heidel brought this action on the policy. The defense was that Heidel had failed to pay an alleged bimonthly premium which was due on August 1, 1901, and that the policy had been abandoned by mutual consent. At the trial the parties agreed that Heidel paid all his premiums under the original policy, that he made an application for that policy and another application for the second policy, and the defendant admitted in its answer that it issued the second policy "whereby, in consideration of premiums then and thereafter to be paid, it insured the life of said Heidel, and promised and agreed, subject to the terms of an application therefor and the terms of the constitution and by-laws of said association, to pay, upon the death of said Heidel, to plaintiff, his wife, if living at the time of said death, the sum of $5,000." The policy contained these provisions:

"[The company] in consideration of the application originally made to this association, which is hereby made a part of this contract, and of the surrender of policy or certificate No. 7469 and of the first premium of $145.45, to be actually paid in cash on or before the delivery hereof hereby continues Gustave Heidel of St. Louis county of state of Missouri, hereinafter called the insured, as a member of said association, and upon the condition of the payment in advance of the same amount on the first day of the month of June in every year during the continuance of this policy, there shall be payable to Nettie Heidel of St. Louis county, of state of Missouri, if living at the time of death of said insured, otherwise to the executors or administrators of said insured the sum of $5,000.00. * * * This contract shall not take effect until this policy is delivered to the insured in person and the first premium is paid in cash hereon during his lifetime and while policy or certificate No. 7469 is in full force, which policy or certificate shall be rendered null and void by the act of placing this policy in force."

The defendant offered evidence which it claimed tended to show that after the policy was issued "Heidel paid the first bimonthly premium of $17.45 and the interest on the lien $7.66 on July 1, 1901, and that the subsequent bimonthly premiums for the same amount during the remainder of the year 1901 were not paid by Heidel." The court below sustained objections to this evidence, on the ground that proof that Heidel paid a part of the first annual premium, $145.45, and owed the remainder, was not admissible because by the delivery of the policy the defendant estopped itself from denying the payment of the entire premium for the year in question.

The provisions of the policy that in consideration of the surrender of the original policy, and "of the first premium of $145.45 to be ac-

Digitized by Google

tually paid on or before the delivery hereof," the defendant will pay the $5,000, that "this contract shall not take effect until the policy is delivered to the insured in person and the first premium paid in cash hereon during his lifetime," and the delivery of the policy, constituted an acknowledgment by the company that the first annual premium had been paid, and the delivered policy was competent and persuasive evidence of that fact. Massachusetts Ben. Life Ass'n v. Sibley, 158 Ill. 411, 42 N. E. 137; Germania Fire Ins. Co. v. Muller, 110 Ill. App. 190, 193. The delivery of the policy and this acknowledgment conclusively estopped the company from denying that the contract of insurance was in existence and that it was effective from the time of the delivery of the policy until it was forfeited for some other reason than the failure to pay the first annual premium when it became due. Roberts v. Security Company, Ltd., Q. B. Division, Law Reports, 1897, p. 111, 115; Basch v. Humboldt Mutual, etc., Co., 35 N. J. Law, 429, 431; Dobyns v. Bay State Ben. Ass'n, 144 Mo. 95, 109, 110, 45 S. W. 1107.

But they did not estop this company from proving by a written contract made before or at the time the policy was delivered that an extension of time for the payment of a part or of all of this first premium to specific dates was given, and an agreement made that, if the deferred payments were not then made, the policy should cease, and the failure to make such deferred payments at the times specified by such an agreement would be fatal to the continuance of the policy. Thompson v. Insurance Co., 104 U. S. 252, 26 L. Ed. 765; Pitt v. Berkshire Life Ins. Co., 100 Mass. 500; Life Ins. Co. v. Pendleton, 112 U. S. 696, 707, 5 Sup. Ct. 314, 28 L. Ed. 866; Mooney v. Insurance Co., 80 Mo. App. 192, 195; Leeper v. Insurance Co., 93 Mo. App. 602, 67 S. W. 941; Teutonia Life Ins. Co. v. Mueller, 77 Ill. 22, 24; Snyder v. Nederland Life Ins. Co., 202 Pa. 161, 51 Atl. 744; Duncan v. Missouri Life Ins. Co. (filed March 27, 1908) 87 C. C. A. 542, 160 Fed. 646.

Competent evidence that this annual premium was not paid by Heidel when the policy was delivered, and that a portion had never been paid, was therefore admissible, though in itself insufficient evidence to sustain the defense. If supplemented by a written contract made before or at the time of the delivery of the policy that this premium should be subsequently paid at definite times, and that, if not then paid, the insurance should thereupon cease, and by proof that it was not paid at such times, it might have proved sufficient to prevent a recovery by the plaintiff. The written agreement evidenced by the policy, it is true, is that the premiums shall be paid annually, and evidence of a parol contract made before or at the time of the delivery of the policy that they were to be paid bimonthly is incompetent, because it contradicts the terms of the written contract. Thompson v. Insurance Co., 104 U. S. 252, 259, 26 L. Ed. 765; Chamberlain v. Wright (Tex. Civ. App.) 35 S. W. 707; 17 Cyc. 659. An extension of the time of payment of the first premium without a written agreement at or before the delivery of the policy, or a subsequent contract, for a valuable consideration after its delivery, that the insured shall make the deferred payments at specific times, and

Digitized by Google

that, if he fails to do so, the insurance shall cease or the policy be forfeited, waives all forfeiture for nonpayment of every part of that premium. Thompson v. Insurance Co., 104 U. S. 252, 257, 26 L. Ed. 765; Insurance Co. v. French, 30 Ohio St. 240, 27 Am. Rep. 443; Dobyns v. Bay State Ben. Ass'n, 144 Mo. 95, 108, 109, 110, 111, 45 S. W. 1107; Perry v. Bankers' Life Ins. Co., 47 App. Div. (N. Y.) 567, 570, 62 N. Y. Supp. 553; Lawrence v. Penn, etc., Ins. Co., 113 La. 87, 36 South. 898, 899; Farnum v. Insurance Co., 83 Cal. 246, 23 Pac. 869, 872, 17 Am. St. Rep. 233; McAllister v. New England, etc., Ins. Co., 101 Mass. 558, 561, 3 Am. Rep. 404; Northwestern Life Assur. Co. v. Schulz, 94 Ill. App. 156, 161, 163. After the court had rejected the evidence that the premium was not paid, the defendant obtained permission to introduce that and other evidence, to the effect that notice that an alleged bimonthly premium had become due August 1, 1901, that, if not paid, the policy would lapse and the insurance would be forfeited, was given to Heidel in July, 1901; and that in September, 1901, notice of his failure to pay this premium and of the alleged forfeiture of his insurance was given to him, but this evidence was all introduced under the ruling which has been considered and under the further statement by the court that it should, at the close of the trial reject all the evidence for the defendant, and it did so and directed a verdict for the plaintiff. Counsel for the plaintiff contend that, in the light of the rules of law which have been stated, there was no substantial evidence offered to sustain a verdict for the defendant, and hence that the rulings rejecting its evidence, even if some or all of them were erroneous, were not prejudicial. But conceding, without deciding, that all the evidence offered by the defendant was insufficient under the law to sustain a verdict in its favor, this court is forbidden to examine this question of fact and to render such judgment as it deems right. The defendant was entitled under the seventh amendment to the Constitution, which reads that, "In suits at common law where the value in controversy shall exceed $20.00 the right of trial by jury shall be preserved, and no fact tried by a jury shall be otherwise re-examined in any court of the United States than according to the rules of the common law," to a trial of its cause according to the course of the common law. A trial according to the course of the common law is a trial before a jury under right rulings made by the trial judge in the presence of the jury, and the only remedy for prejudicial errors in such a trial in a national court is a new trial. Parsons v. Bedford, 3 Pet. 433, 446, 448, 7 L. Ed. 732; Barreda v. Silsbee, 21 How. 146, 166, 16 L. Ed. 86; Justices v. Murray, 9 Wall. 274, 277, 19 L. Ed. 658; Miller v. Life Ins. Co., 12 Wall. 285, 300, 20 L. Ed. 398; Insurance Co. v. Comstock, 16 Wall. 258, 269, 21 L. Ed. 493; Insurance Co. v. Folsom, 18 Wall. 237, 249, 21 L. Ed. 827; Railroad Co. v. Fraloff, 100 U. S. 24, 31, 25 L. Ed. 531; Lincoln v. Power, 151 U. S. 436, 438, 14 Sup. Ct. 387, 38 L. Ed. 224; Chicago, Burlington & Quincy R. Co. v. Chicago, 166 U. S. 226, 246, 17 Sup. Ct. 581, 41 L. Ed. 979; Capital Traction Co. v. Hof, 174 U. S. 1, 9, 19 Sup. Ct. 580, 43 L. Ed. 873.

Digitized by Google

The legal presumption is that error produces prejudice. It is only when the fact so clearly appears as to be beyond doubt that an error challenged did not prejudice and could not have prejudiced the complaining party that the rule that error without prejudice is no ground for reversal can have effect. Deery v. Cray, 5 Wall. 795, 807, 808, 18 L. Ed. 653; Peck v. Heurich, 167 U. S. 624, 629, 17 Sup. Ct. 927, 42 L. Ed. 302; Smith v. Shoemaker, 17 Wall. 630, 639, 21 L. Ed. 717; Moores v. Bank, 104 U. S. 625, 630, 26 L. Ed. 870; Gilmer v. Higley, 110 U. S. 47, 50, 3 Sup. Ct. 471, 28 L. Ed. 62; Railroad Co. v. O'Brien, 119 U. S. 99, 103, 7 Sup. Ct. 118, 30 L. Ed. 299; Mexia v. Oliver, 148 U. S. 664, 673, 13 Sup. Ct. 754, 37 L. Ed. 602; Railroad Co. v. O'Reilly, 158 U. S. 334, 337, 15 Sup. Ct. 830, 39 L. Ed. 1006; Railroad Co. v. McClurg, 8 C. C. A. 322, 325, 326, 59 Fed. 860, 863; Association v. Shryock, 20 C. C. A. 3, 11, 73 Fed. 774, 781; Railroad Co. v. Holloway, 52 C. C. A. 260, 114 Fed. 458; Armour & Co. v. Russell, 75 C. C. A. 416, 144 Fed. 614, 615, 6 L. R. A. (N. S.) 602. It does not appear beyond doubt that the defendant was not prejudiced by the first ruling which has been discussed. If the court had admitted the evidence rejected, the defendant might have proved a written agreement made at or before the policy was delivered that the $145.45, which constituted the first annual premium, should be paid at subsequent fixed times, that a failure to pay it at those times should forfeit the insurance and that the insured failed to pay it at the times specified. It might have established the fact that an agreement subsequent to the delivery of the policy for a valuable consideration to the same effect was made and with the same result. Again, if that evidence had been received, either the court or the jury would have decided whether or not that and all the other admissible evidence presented at the trial was sufficient to sustain the defense, a question which has never yet been considered by either court or jury. The fact that it appears upon the record of a trial, wherein evidence is erroneously rejected, that the rejected evidence would have been futile if received, does not show that its rejection was not prejudicial, because the proposer might have introduced other evidence or have otherwise changed his course at the trial if the ruling of the court had been right and his rejected evidence had been received. Deery v. Cray, 72 U. S. 795, 806, 807, 18 L. Ed. 653; Peck v. Heurich, 167 U. S. 624, 629, 17 Sup. Ct. 927, 42 L. Ed. 302. There is therefore no escape under the law from a reversal of the judgment below.

It is accordingly reversed, and the case is remanded to the Circuit Court, with directions to grant a new trial.

Digitized by Google

(161 Fed. 540.)

STERNBERGH v. DURYEA POWER CO.

(Circuit Court of Appeals, Third Circuit. May 8, 1908.)

No. 19.

1. BANKRUPTCY—CORPORATIONS—UNPAID STOCK—RIGHTS OF TRUSTEE.
On a corporation becoming a bankrupt its trustee acquires no higher rights to recover stock liabilities from stockholders than the bankrupt had.

2. CORPORATIONS—STOCK SUBSCRIPTIONS—PAYMENT FOR STOCK—PATENTS.
Pa. Act April 29, 1874 (P. L. 81, § 17), provides that corporations, created thereunder or accepting its provisions, may take patent rights necessary for their business, and issue stock to the amount of the value thereof in payment, and that the stock so issued might be declared and taken as full-paid stock, without liability for further calls or assessments. *Held*, that where a corporation increased its capital stock to $100,000, $85,000 of which was issued in payment for certain patent rights, and S. contributed $10,000, which was applied to the purchase of certain of the patent interests, and also $15,000 representing the balance of the corporation's capital, such transaction having been unchallenged by all the parties in interest for six years, the stock, as against the corporation, should be treated as fully paid, it being immaterial that S., in the division of the stock, in fact secured 810 shares for a cash contribution of $25,000.

3. SAME—RETURNS TO STATE DEPARTMENT.
Where the capital stock of a corporation was issued for patents and cash, a return of the transaction, made to the state department, that the capital stock of the corporation had been increased from $1,000 to $100,000, the additional stock being issued for cash and property, having been received by the department without objection, was sufficient, in the absence of bad faith or fraud.

Petition for Revision of Proceedings of the District Court of the United States for the Eastern District of Pennsylvania, in Bankruptcy.

Cyrus G. Derr and John G. Johnson, for petitioner.
Andrew A. Leiser and George W. Wagner, for appellee.

Before DALLAS, GRAY, and BUFFINGTON, Circuit Judges.

BUFFINGTON, Circuit Judge. In the bankruptcy proceeding of the Duryea Power Company in the court below, Sternbergh, the petitioner for review, sought to prove his claim of $14,000, and to vote in the election of trustee. The referee held Sternbergh was indebted to the company in $26,000, on 510 shares of its stock, and rejected his claim. On hearing, the court approved the action of the referee. Thereupon Sternbergh petitioned for review.

The facts are not in dispute, and the substantial question involved is the alleged liability of Sternbergh on the stock. After a careful study of the facts we are of opinion the referee failed to grasp the significance of the transactions as a whole, and what the agreements between the parties sought to effect. No question of good faith is involved, nor is there any doubt that what the parties had in view could lawfully be done by fitting papers and proceedings. Mr. Hiester, a lawyer of high standing, has testified to the purpose of the parties,

Digitized by Google

and frankly assumes the blame if the papers and proceedings fail to effect such purpose. The entire matter was one between the four men, Sternbergh, Duryea, Mulholland, and Crowther. No one else was interested, and no question is involved of any outside party buying stock in the Duryea Power Company, the present bankrupt. Duryea and the Duryea Manufacturing Company of Peoria, Ill., had some patents, which the four parties contemplated acquiring, with a view to making auto-freight trucks at Reading, Pa. To obtain license under these patents it was necessary for Duryea to pay the Peoria Company $10,000. Presumably, Mulholland and Crowther had some interest in the patents, or rendered Duryea some service in carrying out the proposed arrangement, for otherwise it cannot be explained how they got their $19,000 of minority stock in connection with Duryea. They contributed no part of the money, which Sternbergh furnished. The latter was the moneyed man of the four, and it was arranged that he contribute $25,000 to a proposed company of $100,000 capital. For this he was to receive 510 shares, the majority, of full-paid shares of $100 each. Duryea was to contribute the patents, and was to receive $10,000 in cash, to enable him to get the patent licenses from the Illinois Company, 300 shares of full-paid stock, and employment at $3,000 per year. Mulholland and Crowther were to get 190 shares of full-paid stock. All parties were to assign to the company inventions made by them. From this it is clear that the substance of the arrangement was that the patents were capitalized at $85,000. Sternbergh furnished $10,000 in cash, by which licenses could be obtained from the Illinois Company, and his $15,000 constituted the working capital of the proposed company. For this Sternbergh obtained the majority stock, and Duryea the minority, which for some, to him presumably sufficient, reason he divided between himself, Mulholland, and Crowther. The papers were drafted, and the proceedings had in furtherance of this general plan. The agreement between the four was entered into February 13, 1900; in pursuance thereof the Duryea Power Company, the bankrupt, was chartered on April 6, 1900, with a capital of $1,000. On April 20, 1900, that company voted to increase its capital stock to $100,000, and evidently deferred making return of such increase until the patents were acquired. On June 11, 1900, Duryea and the Duryea Manufacturing Company of Peoria, Ill., entered into an agreement, with the Duryea Power Company of Reading, Pa., to license under the patent, in consideration of the payment of the $10,000 to the Peoria company and the stock to Duryea. On October 29, 1900, the return of the vote to increase stock was sworn to. On October 31st it was accepted, and filed in the office of the Secretary of State, where it has remained unquestioned. On October 27, 1900, a certificate for 510 shares of full-paid stock was issued to Sternbergh, in pursuance of a resolution of the Duryea Power Company of April 20, 1900. Under these facts is Sternbergh liable for further payments on his stock? On this company becoming bankrupt its trustee acquired no higher rights than the bankrupt possessed (First Nat. Bank v. Pennsylvania Trust Co., 124 Fed. 968, 60 C. C. A. 100; Davis v. Crompton, 85 C. C. A. 633, 158 Fed. 735), and it is clear that company had no right of ac-

Digitized by Google

tion against Sternbergh. Under the Pennsylvania act of April 29, 1874 (P. L. 81, § 17):

"Every corporation created under the provisions of this act, or accepting its provisions, may take such * * * patent rights * * * as is necessary for the purpose of its * * * business, and issue stock to the amount of the value thereof, in payment thereof, and the stock so issued shall be declared and taken to be full-paid stock, and not liable to any further calls or assessments."

Having taken these patents at a valuation to which every person in interest agreed, and having enjoyed them for all these years while they were running, it is clear this company cannot question or repudiate the transaction, and assess or collect on the full-paid stock which it issued for them. This is not the case of an uncollected or unpaid assessment or of a subscription. It is an indirect attempt to invalidate an executed transaction, which has stood unchallenged and ratified by six years' acquiescence and enjoyment of the consideration paid therefor. If now open to attack, the only ground in fact on which it could be done is that the patents were not worth the $85,000 at which they were taken, but of this there is no evidence. Duryea testified of their value up to $40,000; that his prior price for them was $100,000, and the referee sustained an objection to the petitioner's question, which sought to show by Duryea they were worth in excess of $40,000. Presumably that objection would not have been made by his counsel, unless his answer would have disclosed that fact. Nor was the return made to the state department that "the capital stock of said company has been increased from $1,000 to $100,000, said additional stock being issued for cash and property," either untrue or misleading. Patents are personal property (Shaw Valve Co. v. City of New Bedford [C. C.] 19 Fed. 753), and were aptly returned and described as property. A large number of returns printed in petitioner's brief shows the return in this case is substantially in the form followed by the Pennsylvania bar. And in view of the absence of bad faith and fraud and of the acceptance, without objection, of this return by the department, we see nothing to warrant our challenging its sufficiency. Holding these views, we are of opinion Sternbergh was not indebted to the bankrupt company on his stock, and the referee should have allowed him to prove his claim.

The order of the court approving the action of the referee will be reversed, and the case remanded, with instructions to allow the petitioner to do so. In view of the fact, however, that no allegation is made against the trustee, we see no reason why, at this late day, the selection of it should be disturbed.

Digitized by Google

161 Fed. 543.)

VACCAREZZO v. 567,000 GALLONS OF MOLASSES (MUNSON S. S. LINE, Claimant).

(Circuit Court of Appeals, Second Circuit. April 14, 1908.)

No. 231.

SHIPPING—SUIT FOR CHARTER HIRE—DEFENSE OF REFUSAL TO LOAD FULL CARGOES.

Evidence considered, and *held* not to sustain the defense of a charterer to a suit for charter hire, admittedly due under a time charter, based on the claim that the master refused to load full cargoes.

[Ed. Note.—Deductions and offsets from charter hire of vessel, see note to Tweedie Trading Co. v. George D. Emery Co., 84 C. C. A. 254.]

Appeal from the District Court of the United States for the Eastern District of New York.

For opinion of court below, see 149 Fed. 792.

Wheeler, Cortis & Haight, Clarence Bishop Smith, and C. S. Haight, for appellants.

Ullo, Ruebsamen & Yuzzolino and Lorenzo Ullo, for appellee.

Before LACOMBE, COXE, and NOYES, Circuit Judges.

PER CURIAM. The libel was brought to recover a balance due of charter hire of the steamship Margaretha. The amount was not disputed, but claimant counterclaimed for damages because of an alleged refusal of the master to load full cargoes during the voyages made between January 1 and August 12, 1905. The District Judge made some allowance for the last two voyages, but as to the earlier ones reached the conclusion that claimant was concluded in each instance by an account stated. The libelant did not appeal, so the propriety of an allowance for the last two voyages is not presented for review here.

We have reached the conclusion that the decree should be affirmed, not upon the points of law which have been presented and argued, as to which we express no opinion, but because we are of the opinion that the claimant has not established his defense. The vessel was originally chartered in January, 1903, under a charter party which contained the following clause:

"(6) That the whole reach, burthen, and passenger accommodation of the ship (not being more than she can reasonably stow and carry) shall be at the charterers' disposal, reserving only proper and sufficient space for ship's officers and crew, tackle, apparel, furniture, provisions, stores, and fuel."

A renewal charter was entered into on July 4, 1903, which was subsequently further renewed. Under these successive charters 42 voyages were made. When originally chartered the steamship, an English-built vessel, was operating under the German flag. She was sold to her present owner toward the end of 1904, subject to claimant's charter; and upon sale her register was changed and she took the Italian flag. Under her new control the later voyages, No. 32 to No. 42, inclusive, were made. It is of these voyages that complaint is made. The contention is that while in charge of her two successive German captains she carried full cargoes and gave entire satisfaction, but as soon as the Italian captain took command he insisted on so loading the vessel as

Digitized by Google

not to submerge her "plimsoll mark," although, being merely an English mark, it was in no way binding on the vessel when under the Italian flag; that the new captain was over-cautious, so timid that he refused to load enough molasses to make up a full cargo; and that in consequence there was a breach of the charter, with resulting damage.

It may be premised that the mere circumstance that one captain habitually carries more cargo in a ship than a subsequent captain of the same ship does is not determinative of the question. Possibly the second captain may be over-cautious. Possibly, also, the first captain may have been over-rash. The matter of safe navigation of a vessel is so peculiarly one within the knowledge of her captain that very clear and convincing evidence is required to warrant a court in holding that his judgment is at fault. As to the "plimsoll mark" itself there is a conflict of evidence. The captain says it was 19 feet and 11 inches from the keel of the ship, and a witness for the claimant that those figures on the plan of the ship indicate the depth of the hold. A witness for claimant testified that the captain insisted on refusing cargo when the water had reached the "plimsoll mark." The captain testified that the Italian government had nothing to do with that mark, that there was no mark upon which he was required to load by the government, and that the ship when loaded draws about 20 feet 10 inches, or 2 or 3 inches, more or less, depending on the season, summer or winter.

The claimant put in testimony showing the quantity of molasses carried on each voyage. As she was a tank steamer, loaded out of a shore tank, these figures may be accepted as accurate. In the calculations that are presented and relied upon, however, the gallons are turned into tons, and the tons are manifestly an estimate. The witness testified that the weight of a gallon of molasses varies with density and temperature. "If a gallon of molasses weighs 11.60 pounds, it might at another time weigh 11.65 or 11.70; sometimes the same difference on the other side." The rule he employed for turning gallons into tons was to "divide by 200"; but, whether the ton be long or short, some other divisor than 200 would seem to be required if a gallon weighs from 11.50 to 11.70 pounds. The tons of fuel and stores at inception of each voyage were also "estimated." The resulting tabulations are indicated below.

First Ten Voyages—German Flag.

Voyage.	Draft.	Tons Molasses.	Coal & Stores.	Total.
1	20′, 8½″	2,790	185	2,975
2	20′, 3½″	2,835	230	3,065
3	20′, 11½″	2,868	185	3,033
4	20′, 7″	2,890	166	3,056
5	20′, 10½″	2,861	176	3,037
6	20′, 10½″	2,883	144	3,027
7	20′, 9″	2,845	161	3,006
8	21′	2,974	161	3,135
9	21′	2,930	171	3,131
10	21′, 3¼″	2,915	194	3,109

Examination of this table indicates how unreliable these estimates are. For example, on the tenth voyage, when the vessel was loaded to a draft of 21 feet 3¼ inches she carried 27 tons less than she did on the eighth voyage, when loaded to a draft of 21 feet.

Digitized by Google

Voyages Under Italian Flag.

Voyage.	Draft.	Tons Molasses.	Coal & Stores.	Total.
32	21′	2,747	190	2,937
33	20′, 6″	2,665	260	2,925
34	20′, 7½″	2,705	231	2,936
35	20′, 8½″	2,724	182	2,906
36	20′, 9″	2,765	200	2,965
37	20′, 7½″	2,742	196	2,936
38	20′, 8″	2,673	181	2,854
39	20′, 11½″	2,717	156	2,873
40	21′	2,735	153	2,888
41	20′, 7″	2,865	136	3,001
42	21′	2,893	196	3,089

Comparison of the drafts shown in this table with those on the first 10 voyages, in which the vessel was commanded by the German captain, whose conduct meets with no criticism from the charterer, shows how unpersuasive is the testimony that the Italian captain was over-cautious, and that through his timidity she was not loaded as deeply as she had been before. Upon the record we are not satisfied that the defense was sufficiently made out to defeat the libelant's admitted claim.

The decree is affirmed, with interest and costs.

(161 Fed. 545.)

O'CONNELL et al. v. NATIONAL WATER CO.

(Circuit Court of Appeals, Third Circuit. May 13, 1908.)

No. 23.

TRADE-MARKS AND TRADE-NAMES—UNLAWFUL COMPETITION—DECEPTION OF PUBLIC.

In order to entitle complainant to relief in a suit for unlawful competition, it is not necessary that the public should be actually deceived; it being sufficient that the infringement had a tendency to deceive.

[Ed. Note.—For cases in point, see Cent. Dig. vol. 46, Trade-Marks and Trade-Names, § 86.

Unfair competition, see notes to Scheuer v. Muller, 20 C. C. A. 165; Lare v. Harper & Bros., 30 C. C. A. 376.]

Appeal from Circuit Court of the United States for the Eastern District of Pennsylvania.

For opinion below, see 159 Fed. 1001.

John H. Fow, for appellants.

J. J. Kennedy, for appellee.

Before DALLAS, GRAY, and BUFFINGTON, Circuit Judges.

DALLAS, Circuit Judge. This is an appeal from a decree of the Circuit Court for the Eastern District of Pennsylvania, awarding the usual relief to the complainant below (the appellee here) for unfair competition in trade. This decree was so satisfactorily vindicated by the learned judge who made it that we are content to rest our affirmance of it on his opinion. 159 Fed. 1001. Upon a single point, however, we add a few words in deference to the earnestness and ability with which the learned counsel of the appellant pressed it upon our attention.

It is claimed that there was no evidence to warrant a finding that any one had really been deceived into believing that the water put

Digitized by Google

upon the market by the defendants below was that which was dealt in by the plaintiff; but the sufficient answer to this claim is that "it is not necessary that the public should be actually deceived in order to afford a right of action. All that is required is that the infringement should have a tendency to deceive," and of this, in the present case, there could be no reasonable doubt. Shaw et al. v. Pilling, 175 Pa. 78–87, 34 Atl. 446; Consolidated Ice Co. v. Hygeia Distilled Water Co., 151 Fed. 10–12, 80 C. C. A. 506.

The decree of the Circuit Court is affirmed.

(159 Fed. 10.)

DAVIS v. CHICAGO, R. I. & P. RY. CO.

(Circuit Court of Appeals, Eighth Circuit. November 25. 1907.)

No. 2,464.

1. NEGLIGENCE—CONTRIBUTORY NEGLIGENCE—ACTS IN EMERGENCIES.

Where a person without fault on his part is brought suddenly into a situation of imminent danger, he is not chargeable with culpable negligence because he fails to take the best means of escape, and the party whose negligent act brought him into such perilous situation is not relieved from liability for his injury if he acts as a person of ordinary prudence might have done under the same circumstances.

[Ed. Note.—For cases in point, see Cent. Dig. vol. 37, Negligence, §§ 99, 100.]

2. RAILROADS—ACCIDENT AT CROSSING—CONTRIBUTORY NEGLIGENCE.

Where plaintiff and another driving a horse approached to within 25 feet of a railroad crossing, well known to them to be dangerous, at a trot, and even there could not see along the track for more than 50 to 150 feet nor hear signals given by an approaching train because of an intervening bluff and an adverse wind and the noise made by their vehicle, their action in driving upon the crossing without stopping to look and listen was negligent, and precluded plaintiff from recovering damages from the railroad company for an injury received by jumping out of the vehicle to avoid danger from an approaching train which they did not see until the horse had stepped upon the track.

[Ed. Note.—For cases in point, see Cent. Dig. vol. 41, Railroads, §§ 1043–1070.]

3. NEGLIGENCE—IMPUTED NEGLIGENCE—PERSONS DRIVING TOGETHER.

That a plaintiff at the time of his injury at a railroad crossing was riding in a vehicle with a friend who owned the horse and was driving did not relieve him from the duty of exercising ordinary care to avoid injury, and where he sat beside the driver, and made no objection when the latter negligently drove upon the track in front of an approaching train, such negligence is imputable to him.[1]

In Error to the Circuit Court of the United States for the District of Kansas.

Robert J. Brock, for plaintiff in error.

Paul E. Walker (M. A. Low, on the brief), for defendant in error.

Before SANBORN and VAN DEVANTER, Circuit Judges, and PHILIPS, District Judge.

PHILIPS, District Judge. The plaintiff in error (hereinafter designated the plaintiff) sued the defendant in error (hereinafter desig-

[1] See note at end of case.

Digitized by Google

nated the defendant) to recover damages for personal injuries. As the trial court at the close of the plaintiff's evidence directed a verdict for the defendant, a review of the case made is rendered necessary.

The plaintiff, a man of middle age, and one Pfeutze, resided in the town of Manhattan, Kan., a few miles distant from the crossing of the public highway over the track of the defendant railroad company where the accident in question occurred. On the morning of October 16, 1904, they left home in a two-seated rig drawn by one horse belonging to said Pfeutze, the latter driving, to visit some point in the country of mutual interest. They were close personal friends, and so traveled together in companionship. They approached the crossing in question from a northeasterly direction, the roads intersecting each other at right angles. A bluff from 150 to 200 feet high arose just west of the crossing, extending back some distance, cutting off the view of a train of cars coming from the west when the traveler approached this crossing, under conditions hereinafter disclosed. It was regarded as a very dangerous railroad crossing, a fact well known to the plaintiff and Pfeutze. They were quite familiar with this situation, having used this crossing frequently for a number of years. They admitted that as they approached the crossing they were engaged in general conversation, and trotted the horse to within 20 or 25 feet of the crossing before the driver slowed him to a walk. They did this when, according to their testimony, they knew that at a distance of about 30 feet from the track they could not see a train coming through the cut from the west a greater distance than 50 feet; though the actual measurement and experiments made demonstrate that 34 feet back from the track a train could have been seen at a distance of about 90 feet. At a distance of 15 feet from the crossing the proof showed that the train could be seen 232 feet. They comprehended the fact on approaching the point of intersection that a train might appear at any time, and therefore they testified that in approaching the crossing they looked and listened therefor; that hearing no signal they drove onto the track without stopping; and just as the horse's forefeet reached the north rail the plaintiff observed the train coming, when the driver applied the whip to the horse and safely cleared the crossing before the engine arrived. The plaintiff, taking alarm, sprang from the vehicle, alighting on the south side of the track, and in the fall received injury to one of his knees, more or less serious, for which injury this action was instituted. If the plaintiff's own negligence or want of due care did not contribute to bringing him into such perilous situation, it is to be conceded that his act in leaping from the vehicle, although he would not have been injured had he remained seated, would not disentitle him to maintain action for damages. When a person, without fault on his part, is brought suddenly into a situation of imminent danger, not admitting of opportunity for the exercise of deliberate judgment as to the better means of escape, culpable negligence is not to be imputed to him for not selecting the better course. If under such circumstances he makes such choice as a person of ordinary prudence placed under like conditions would

Digitized by Google

make, and injury thus comes to him, it would not relieve the party from accountability therefor whose negligent act brought him into such perilous situation. Omaha Water Company v. Schamel, 147 Fed. 502, 78 C. C. A. 68, loc. cit. The same may be said of the action of Pfeutze in not pulling his horse back off the track when he discovered the approach of the train if his forefeet were already over the first rail, provided he was not guilty of contributory negligence.

The actionable negligence of the defendant charged in the petition is as follows: In propelling said train over said crossing without ringing the bell or sounding the whistle, and without giving or attempting to give any sufficient warning or signal of its approach, when the defendant well knew that it was a most dangerous crossing, and that the ordinary warning of the bell and whistle would be wholly ineffectual to protect persons entering upon said crossing; and in approaching said crossing at a dangerous rate of speed; and failing to maintain a watchman and gates at the crossing, and not providing proper signals giving notice of the approach of trains.

The plaintiff knew that neither watchman nor gates, nor appliances for signals, were kept and maintained at said crossing. Of what avail would the presence of a watchman to operate gates have been in view of the plaintiff's evidence? As the train was not running on schedule time, being about three hours late, a watchman would not have known the moment of its coming. And as the plaintiff and Pfeutze, if they are to be credited, notwithstanding their vigilance, did not discern the approach of the train until the horse was on the near rail, it must be conceded that the watchman, if there, would have been in the same predicament in giving timely warning. If it be said that he could have warned them not to enter upon the track without first stopping, the answer is that they already possessed the same knowledge as would the watchman, that the place itself was a warning of danger, and therefore they should have stopped with or without such outside warning. Any warning by a watchman would have conveyed to them only what they already knew as well as he did. If they could not hear any signals the watchman could not have heard any. They therefore had the same reason for stopping before entering upon the crossing that the watchman would have had for warning them to do so. They knew, on approaching this crossing, that no appliances were employed there by the railroad company for giving signal of the approach of a train, and therefore that they could not rely thereon for their protection and safety. All the more, therefore, should they have depended upon their quickened senses and increased precaution in approaching the crossing.

The allegation respecting the dangerous rate of speed of the train is not supported by any evidence that would have warranted the jury in finding the existence of such fact. The only witness to this issue was one Cooper, who, according to his statement, was about 150 yards northeast of the crossing, following on the same road in the rear of the plaintiff. Remarkably enough, in view of the plain-

Digitized by Google

tiff's evidence that they could not see the crossing until they were within about 30 feet of it, this witness claimed that he saw the train 150 yards to the northeast, when it was about 50 feet from the crossing, although he did not see the accident. Indisputably, he had but a mere glimpse of one or two seconds of the train. From which it is manifest that any expression of opinion by him as to its rate of speed was the merest speculation and guesswork. He said he thought it was running from 40 to 45 miles an hour. There was nothing whatever at the instant to fix his mind upon the matter of the speed, and his cross-examination developed that he had never experimented from a side view to determine the rate of speed of a passing train. As said in McGrail v. McGrail, 48 N. J. Eq. 532–536, 22 Atl. 582, 584:

> "Nothing is more uncertain and unreliable than the testimony of witnesses as to the time occupied in a transaction."

Recognition of such mere guesswork as sufficient to carry the question to the jury of the rate of speed of a train has a long column of injustice to its account. This testimony, doubtless, and properly so, was treated as utterly worthless by the experienced judge who presided at the trial.

The only remaining ground of negligence worthy of consideration is the imputed failure of the defendant to sound the whistle or ring the bell when approaching the crossing. The statute of the state requires that one or the other of such signals should be given at least 80 rods from such public road crossing. The evidence on behalf of the plaintiff was that although they listened they did not hear such signal, as did also the witness Cooper. But the plaintiff's testimony was that on account of the obstruction of the long, high bluff and the adverse direction of the wind blowing at the time they might not have heard the sounds if given. The petition itself alleges that the defendant, on approaching this crossing, knew that "the ordinary warning of the bell and whistle would be wholly ineffectual to protect persons crossing the said crossing;" and in the brief of counsel for plaintiff it is admitted that "by reason of the obstruction caused by the bluff it was impossible for them to hear the train until it was dangerously close." In view of the rule of law that the servants of the defendant are presumed to have performed their duty in respect of giving the required signal, it devolved upon the plaintiff to overcome this presumption by satisfactory evidence to a reasonable mind. When the plaintiff himself thus, in effect, conceded that the whistle or bell, if sounded, probably would not have reached such traveler, it is somewhat remarkable that he should assume the position that he is entitled to recover damages by reason of the failure of the defendant to have given such signal, when the burden of proof rested upon the plaintiff to establish such omission by satisfactory evidence. If, however, this doubt should be resolved in favor of the plaintiff, what of the conduct of these travelers in approaching the crossing as they did? With full knowledge of the situation, as hereinbefore stated, they approached the crossing engaged in general conversation, indicating that their

Digitized by Google

minds were not fixed upon the probable approach of a train and giving heed to any sounds, on a slight down grade they suffered the horse to trot until they reached within 20 or 25 feet of the railroad track, and then in a walk entered upon the crossing without taking the precaution to stop; when, according to their statement, from the point where they stopped trotting, it was almost a physical impossibility for them to have discovered the approach of a train from between 50 and 100 feet away. Courts will take judicial cognizance of physical facts of common knowledge. Judges know without evidence taken that the clatter of a horse's hoofs on a road when trotting, and a vehicle thus in motion, under the most favorable circumstances, will make such an amount of noise as will obstruct the conveyance of sounds to the ear—that they lessen the chances of hearing distinctly. And therefore, on approaching a known place of danger at a railroad crossing, they should exercise a degree of care commensurate with the hazard to be encountered demanded of them, and, where both the senses of vision and hearing were thus obstructed, they should take the next ordinary, practical, and sensible course of stopping to look and listen. Instead of doing this, they drove onto the track; and in this connection it is important to note the evidence on behalf of the plaintiff. It is that when they first discovered the engine it was within 120 feet of them, and at that time the forefeet of the horse were over the first rail of the track. The uncontradicted evidence is, demonstrated by actual measurements and observations since made, that at a distance of 34 feet from the track an engine from the west could be seen 90 feet, and at a distance of 15 feet from the track the engine could be plainly seen 232 feet. Physical facts, it has been pungently said, never lie, but witnesses sometimes do. If the plaintiff and Pfeutze did not discover, as they testify they did not, the engine until it was within about 120 feet of them, it is clear proof that they were not looking for the engine when they drove onto the track; and that had they discovered it, as they should have done in the exercise of due vigilance, when it first came in view, the horse could have been readily stopped before entering upon the railroad track, or they would have had ample time to have passed clear of the track. The law is that in the absence of any tangible proof, as we have shown, of the rate of speed of the train, the presumption must be indulged that the engineer approached the crossing with due care, measured by a conscious sense of the danger that might likely be encountered there, and that after discovering the presence of the vehicle he did not recklessly run it down.

Pfeutze, touching this matter, testified as follows:

"Q. At a point up the road from where you came beyond twenty-five feet from the crossing, what could you observe in the direction of the railroad? A. Hardly nothing at all, except right at the crossing in front of the horse."

He further said:

"We expected a train from the west."

It is to be conceded, it seems to us, that under such conditions common prudence dictated that it was careless to recklessness to trot

Digitized by Google

on even a slight down grade up to within 25 feet of the track, and then walk immediately onto it without stopping to look and listen. Had he done so the injury would have been avoided beyond question. It is not a sufficient answer to this to say that the parties might have reasonably considered that, if they did stop and satisfy themselves that no train was in view and then proceeded, still they might have been caught before accomplishing the crossing. This suggestion, it seems to us, could be with equal logic employed in any instance where the party thus injured had failed to stop and listen. From a point known at the time to plaintiff and Pfeutze where the horse could have been stopped in safety, they could see the engine over 200 feet away, just as they did see it when the horse was in motion at the north rail of the track; so that the stubborn fact remains that if they had stopped for three or four seconds this lawsuit would have been avoided. Judge Day, sitting with Judges Lurton and Severens, in Shatto v. Erie Railroad Company, 121 Fed. 678–682, 59 C. C. A. 1, speaking to such suggestion, said:

"It is argued that it would have done no good to stop and listen. We cannot agree to this supposition; certainly not to the extent of exonerating the plaintiff from using the precautions obviously necessary for his protection, because they could not have changed the result. We think it only reasonable to suppose that, had he stopped and listened with open ears before going between the open cars, he would have heard the noise of the approaching train. Had he halted for a moment before going between the cars, the train would have passed in safety."

Chief Justice Doster, in A., T. & S. F. Railway Company v. Willey, 60 Kan. 819–825, 58 Pac. 472, 473, discussing a germane question, said:

"The pertinent facts, then, are that the plaintiff below could not see the approaching train because of obstructions to his view, nor could he hear it because of the noise of the wind in the grove of trees. He was, however, familiar with the crossing and all its surroundings. He knew that a train was liable to pass at any time. He knew that he could neither see nor hear its approach. He could, however, have seen or heard it if he had stopped just before his team passed to the end of the hedge nearest the track, which point was 28 feet from the nearest rail. He knew that he could not, for the reasons stated, either see or hear an approaching train without stopping at or about the end of the hedge. Under these circumstances the legal proposition of his obligation to stop, in order to assure himself of safety, is unquestionable. The law first laid him under the obligation to look and listen. This is undisputed. The exercise of the senses of sight and hearing were unavailing, and were known by him to be unavailing. The very contingency, then, in which the law laid him under the necessity of further precaution arose."

This rule has been again recognized by the Supreme Court of Kansas in C., R. I. & P. Railway Company v. Palmer, 61 Kan. 860, 60 Pac. 736, Walker, Receiver, v. Mercer, 61 Kan. 736–737, 60 Pac. 735, and in the recent case of M., K. & T. Railway Company v. Jenkins, 74 Kan. 487, 87 Pac. 702.

We are not called upon in this case to approve of the extreme proposition laid down by so distinguished a judge as Mr. Justice Sharswood in Railroad Company v. Beale, 73 Pa. 504, 13 Am. Rep. 753, "that the fact of the failure to stop immediately before crossing a railroad track is not merely evidence of negligence for the jury, but

Digitized by Google

negligence per se, and a question for the court." The duty to stop is a relative one. It depends upon the situation of the particular case, the knowledge the traveler has of the situation, and the reliance he may reasonably place under the circumstances on his opportunities for seeing and hearing without taking the last precaution of stopping. The authorities are quite in accord on the proposition that if the view is unobstructed so that an approaching train, before it reaches the crossing, can be seen, there is no occasion for the special exercise of the sense of hearing—listening; and therefore there is no reason why he should stop for that purpose. On the other hand, if the view is obstructed, interfering with the sense of sight, then he must bring into requisition the sense of listening carefully and attentively. And if there is any noise or confusion over which he has control, such as that of the noise of the horse's feet, or the grinding sound of the wheels, or the ordinary noise of the vehicle, interfering with the acuteness of the sense of hearing, it is his duty to stop such noise or interfering obstruction and listen for the train before going upon the track.

Mr. Chief Justice Alvey, in Railroad Company v. Hogeland, 66 Md. 149–161, 7 Atl. 105, 59 Am. Rep. 159, said:

"It is negligence per se for any person to attempt to cross tracks of a railroad without first looking and listening for approaching trains; and, if the track in both directions is not fully in view in the immediate approach to the point of intersection of the roads, due care would require that the party wishing to cross the railroad track should stop, look, and listen before attempting to cross. Especially is this required where a party is approaching such crossing in a vehicle, the noise from which may prevent the approach of a train being heard. And if a party neglects these necessary precautions, and receives injury by collision with a passing train, which might have been seen if he had looked, or heard if he had listened, he will be presumed to have contributed, by his own negligence, to the occurrence of the accident. * * * This is the established rule, and it is one that the courts ought not to relax, as its enforcement is necessary as well for the safety of those who travel in railroad trains as those who travel on the common highways."

So in Chase v. Railroad, 167 Mass. 383, 45 N. E. 911, it is said:

"If there is anything to obstruct the view of a traveler on the highway at a crossing at grade, it is his duty to stop until he can ascertain whether he can cross with safety."

Quite apposite to the case in hand is that of Seefeld v. C., M. & St. P. R. Company, 70 Wis. 216–222, 35 N. W. 278, 5 Am. St. Rep. 168, where the plaintiff drove toward a crossing where his view was obstructed, and the wind was blowing, and there were vehicles present which may have rendered hearing more difficult, the plaintiff being familiar with the dangerous condition of the crossing, and with knowledge that a train might be expected to pass at any moment. Mr. Justice Lyon, after full consideration of the authorities, approved the action of the trial court in directing a verdict for the defendant. He concluded by saying:

"The rule to be deduced from these cases is this: If the view of the traveler on the highway approaching a railroad crossing is so obstructed that he cannot see an approaching train in time to stop his team before colliding with it, if he knows a train is due at such crossing at or about such time, and if he is unable to hear the approaching train when his team is in motion, whether by reason of the force and direction of the wind or of noises in the vicinity,

Digitized by Google

whether made by his own wagon or by other causes, ordinary care requires him to stop his team while he may do so, and listen for the train."

In Shufelt v. Flint & P. M. R. Company, 96 Mich. 327, 55 N. W. 1013, the court said:

"These trains must run where the view is obstructed by cuts, by embankments, by trees, and by other things. He who does not choose to stop and listen, where he cannot see, must suffer the consequences of his own negligence."

In Henze v. St. L., K. C. & N. Ry., 71 Mo. 640, the evidence on the part of the plaintiff showed that with his infant child he was driving in a two-horse wagon, at a slow walk, along a highway where it crossed the railroad, when they were run over and killed by an extra train not running on time. The evidence tended to show that while no whistle was sounded or bell rung, the train made such noise that it could have been heard if the party had stopped and listened. Judge Henry said:

"If Henze had used the precaution which common prudence dictates, it is not likely that the calamity would have occurred. If he had stopped to look and listen when near the track, and could neither see nor hear the approaching train, on account of the cut or other obstructions, and no signal was given from the train, he would have been justifiable in attempting to cross, and no negligence would have been imputable to him. But he had no right to drive along over a dry, hard road in a two-horse wagon, the noise of which might prevent him from hearing an approaching train, and, without stopping an instant to see or hear, go upon the railroad track, except at his own peril."

In Stepp v. C., R. I. & P. Ry. Co., 85 Mo. 235, Judge Black said:

"If the crossing is obstructed from view increased caution is required on the part of the traveler as well as the company, and if, from noise, such as a gale of wind, or the rattling of a wagon, hearing is rendered difficult, then it would become the duty of the traveler to stop and listen."

In Merkle v. Railway Company, 49 N. J. Law, 473, 9 Atl. 680, the court, speaking of a case where the party is approaching the crossing with a wagon loaded with boxes and bottles, where he could not see an approaching train until within a few feet of the track, said:

"Inasmuch as he could not see an approaching train at any considerable distance from the track, ordinary prudence required him to stop when he was near enough to the railroad to ascertain, at least by listening, whether there was any danger or not."

In Blackburn v. So. Pac. Ry. Co., 34 Or. 215, 55 Pac. 225–229, the court, speaking of the instance where the noise of a wagon over hard streets, more or less rocky, would interfere with the sense of hearing, said:

"Ordinary care required that he stop the noise by stopping the wagon when he was near enough to the track to determine by listening whether there was danger or not. It is true the evidence indicates that his team was brought to a walk; but, notwithstanding this, the noise from the wagon and horses' feet was necessarily sufficient to interfere with the effective use of the sense of hearing. If they had been brought to a full stop, there would have been no disturbing sound which the plaintiff could control; and, under the circumstances, we think he was bound to exhaust this source of information."

This court in Denver City Tramway Co. v. Norton, 141 Fed. 599, 607, 608, 73 C. C. A. 1, speaking to the instance where the view of

Digitized by Google

an approaching street car was obstructed, said that the "general rule in respect of the driver of a vehicle in approaching a railroad crossing —a known place of danger—requires that he should stop and listen where his view is cut off." We are mindful of what is said by the Supreme Court in Grand Trunk Railway Company v. Ives, 144 U. S. 408, 12 Sup. Ct. 679, 36 L. Ed. 485, respecting the duty of a traveler to stop before driving upon a railroad crossing. The question before the court in that case was predicated of an instruction asked by defendant below, which it was held was properly refused because it confined the consideration of the jury to a few particular enumerated circumstances and excluded others of equal importance.

The facts in the case at bar were palpable and undisputed. On them the law pronounced the judgment without any finding of fact by the jury. The case presented by the evidence is one where it is admitted in argument of counsel that the signals required by the statute to be given would not, probably, have reached the plaintiff, because of the obstruction of a bluff nearly 200 feet in height and extending back some distance, with the wind blowing in such direction as rather to have taken the sound away from the ears of the travelers, with no view of an approaching engine until within some 30-odd feet of the track to have afforded them any reasonable opportunity to avoid a collision if a train was at hand; they approached the point in a trot to within 20 or 25 feet of the track, and, without stopping, walked immediately into the hazard rather than lose 3 or 4 seconds of time, when and where, without alighting from the vehicle, they would have seen the train coming over 200 feet away, and thus have avoided the accident.

The final contention on behalf of the plaintiff is that he cannot be held to have been guilty of contributory negligence, for the reason that the conveyance belonged to Pfeutze, and was being driven by him. Reliance for this position is based principally upon the case of Little v. Hackett, 116 U. S. 366, 6 Sup. Ct. 391, 29 L. Ed. 652. In that case it was held that a person who hires a hack and gives the driver directions as to his destination, and exercises no other control over the conduct of the driver, is not responsible for his acts of negligence, or prevented from recovering against the railroad company for injuries suffered in a collision of the hack with a train, caused by the concurring negligence of the managers of the train and of the driver. This is based upon the proposition that such a hack driver is not the agent of the passenger, over whose conduct and action he has no right of control, and whom he does not undertake to direct. In the case at bar the plaintiff did not hire the conveyance and the driver to carry him to his destination; but they were traveling together in companionship in Pfeutze's vehicle on a mission of mutual interest, the plaintiff having as much right as Pfeutze to direct their course. Under the facts of this case, the relation that plaintiff sustained to his companion, Pfeutze, did not permit him to sit dumb and inert in the vehicle, taking no heed of a known danger, permitting Pfeutze to drive him into a pitfall or onto a deadly railroad track, implicitly trusting his life and limbs to the discretion of his companion, without a word of warning or protest. It is now the better recognized rule of law that as to such a person

Digitized by Google

situated as was the plaintiff, riding in a vehicle in mere companionship with his friend, engaged upon a mutual adventure, it is as much his duty as that of the driver to take observation of dangers, and to avoid them, if practicable, by suggestion and protest. In other words, he is required to exercise ordinary care to avoid injury. As said by the Supreme Court of New York in Brickell v. N. Y. C. & H. R. Co., 120 N. Y. 290–294, 24 N. E. 449, 450, 17 Am. St. Rep. 648:

"The rule that the driver's negligence may not be imputed to the plaintiff should have no application to this case. Such rule is only applicable to cases where the relation of master and servant or principal and agent does not exist, or where the passenger is seated away from the driver by an inclosure, and is without opportunity to discover danger and to inform the driver of it. It is no less the duty of the passenger, where he has the opportunity to do so, than of the driver to learn of danger, and avoid it if practicable."

This is supported by persuasive authority. Whitman v. Fisher, 98 Me. 575, 577, 578, 57 Atl. 895; Township of Crescent v. Anderson, 114 Pa. 643–647, 8 Atl. 379, 60 Am. Rep. 367; Dean v. Penn. Ry. Co., 129 Pa. 514, 525, 18 Atl. 718, 6 L. R. A. 143, 15 Am. St. Rep. 733; Illinois Cent. Ry. Co. v. McLeod, 78 Miss. 334, 341, 29 South. 76, 52 L. R. A. 954, 84 Am. St. Rep. 630; Bresee v. Traction Company, 149 Cal. 131, 85 Pac. 152, 154, 5 L. R. A. (N. S.) 1059; Hoag v. N. Y. Cent. & H. R. R. Co., 111 N. Y. 199, 18 N. E. 648; M., K. & T. Ry. v. Bussey, 66 Kan. 735, 745, 71 Pac. 261; U. P. Ry. Co. v. Adams, 33 Kan. 427–430, 6 Pac. 529; Bressler v. C., R. I. & P. Ry. Co., 74 Kan. 256, 86 Pac. 472. If the law were otherwise, A. and B., having occasion to drive through the country on a matter of mutual business or pleasure, riding in a conveyance owned by A., who should drive, their course of travel leading across a railroad track, the situation of the intersection being very dangerous on account of it being "a blind crossing," with which A., the driver, was not familiar, but B. having full knowledge of such danger, he could sit in his seat and suffer A., without a word of warning or suggestion, to drive into the death trap, and if injured himself, when charged with contributory negligence, say, as A. was not his servant or agent he was not responsible for A. driving heedlessly onto the track. The law of common sense applied to such a situation is that the movement and control of the vehicle is as much under the direction and control of one as of the other.

Under the facts of this record the Circuit Court should stand justified in directing a verdict for the defendant. The judgment is affirmed.

NOTE.

Negligence of Driver of Vehicle Imputed to Persons Riding with Him.

I. In General.

[a] Contributory negligence of the driver or operator of a vehicle is not chargeable against a passenger therein.

—(U. S. 1897) Pyle v. Clark, 25 C. C. A. 190, 79 Fed. 744, affirming (C. C. 1896) 75 Fed. 644;

(Miss. 1891) Alabama & V. Ry. Co. v. Davis, 69 Miss. 444, 13 South. 693;

(N. Y. 1899) Fisher v. City of Mt. Vernon, 41 App. Div. 293, 58 N. Y. Supp. 499; (1907) Noakes v. New York Cent. & H. R. R. Co., 106 N. Y. Supp.

Digitized by Google

522; (1908) Read v. New York Cent. & H. R. R. Co., 107 N. Y. Supp. 1068;

CONTRA, see

(Wis. 1898) Ritger v. City of Milwaukee, 99 Wis. 190, 74 N. W. 815.

[b] The negligence of the driver of a carriage is not imputable to an occupant of the carriage, who has no control over him, so as to relieve a third person from liability for injuries to such occupant, negligently inflicted.

—(Ill. 1903) West Chicago St. R. Co. v. Dougherty, 110 Ill. App. 204, judgment affirmed (1904) 70 N. E. 586, 209 Ill. 241;

(Ind. 1888) Town of Knightstown v. Musgrove, 116 Ind. 121, 18 N. E. 452, 9 Am. St. Rep. 827;

(Md. 1894) Baltimore & O. R. Co. v. State, 79 Md. 335, 29 Atl. 518, 47 Am. St. Rep. 415, following Philadelphia, W. & B. R. Co. v. Hogeland (1886) 66 Md. 149, 7 Atl. 105, 59 Am. Dec. 159;

(Mo. 1907) Burleigh v. St. Louis Transit Co., 124 Mo. App. 724, 102 S. W. 621;

(N. Y. 1857) Knapp v. Dagg, 18 How. Prac. 165; (1898) Zimmermann v. Union Ry. Co., 28 App. Div. 445, 51 N. Y. Supp. 1;

(Pa. 1876) Mann v. Weiand, *81 Pa. (32 P. F. Smith) 243;

(Tenn. 1902) Hydes Ferry Turnpike Co. v. Yates, 108 Tenn. 428, 67 S. W. 69.

[c] Where the driver of a private conveyance is not employed by the person riding therein, the negligence of the driver cannot be imputed to such person.

—(Mo. 1891) Dickson v. Missouri Pac. Ry. Co., 104 Mo. 491, 16 S. W. 381;

(Pa. 1906) Little v. Central District & Printing Telegraph Co., 213 Pa. 229, 62 Atl. 848.

[d] Where plaintiff rides in the vehicle of another, by invitation, neither exercising nor assuming any control over the movements of the team, the driver does not become the agent or servant of plaintiff, so that his negligence, contributing to an injury, will be imputed to plaintiff.

—(U. S. 1892) Union Pac. Ry. Co. v. Lapsley, 2 C. C. A. 149, 51 Fed. 174, 4 U. S. App. 542, 16 L. R. A. 800;

(Iowa, 1888) Nisbet v. Town of Garner, 75 Iowa, 314, 39 N. W. 516, 1 L. R. A. 152, 9 Am. St. Rep. 486;

(N. Y. 1871) Metcalf v. Baker, 11 Abb. Prac. (N. S.) 431; (1891) McCaffrey v. Delaware & H. Canal Co., 62 Hun, 618, 16 N. Y. Supp. 495; (1895) Van Vranken v. Village of Clifton Springs, 86 Hun, 67, 33 N. Y. Supp. 329; (1896) Kessler v. Brooklyn Heights R. Co., 3 App. Div. 426, 38 N. Y. Supp. 799; (1896) Strauss v. Newburgh Electric Ry. Co., 6 App. Div. 264, 39 N. Y. Supp. 998.

[e] (Cal. 1906) Though a person who is injured while riding in a vehicle driven by another is not chargeable with the contributory negligence of the driver in which he did not participate, yet he is not absolved from all personal care, but must exercise ordinary care to avoid all injury.—Bresee v. Los Angeles Traction Co., 85 Pac. 152.

[f] (Ill. 1900) The negligence of the driver of a vehicle is not necessarily to be imputed to a person riding with him, where such person is not, by his conduct, in any way the cause of such negligence.—West Chicago St. R. Co. v. Dedloff, 92 Ill. App. 547.

[g] (Ill. 1901) The law does not impute to a person riding in a buggy any negligence of which the driver of the buggy was guilty, unless such person was in some manner at fault for such negligence.—Chicago City Ry. Co. v. Wall, 93 Ill. App. 411.

[h] (Ill. 1903) The mere fact that the relationship between the driver of a vehicle and a person riding thereon was that of mother and son does not establish as between them the relation of master and servant, so as to render the negligence of the son acting as driver imputable to the mother.—Buckler v. City of Newman, 116 Ill. App. 546.

[i] (Ill. 1905) In an action for injuries to plaintiff by defendant's negligence in driving an automobile, by which the team behind which plaintiff was rid-

Digitized by Google

ing became frightened, an instruction that the negligence of the driver of the team, if any, would not constitute negligence on plaintiff's part, unless plaintiff was himself at fault, or by his own conduct contributed to such negligence, was not error.—Christy v. Elliott, 216 Ill. 31, 74 N. E. 1035, 1 L. R. A. (N. S.) 215, 108 Am. St. Rep. 196.

[j] (Ill. 1905) The doctrine of imputed negligence no longer exists in Illinois, and especially would it not apply as between two persons traveling together in a buggy who sustained toward each other no other relation than that of common excursionists.—Chicago, P. & St. L. Ry. Co. v. Condon, 121 Ill. App. 440.

[k] (Ill. 1907) The doctrine of imputed negligence does not apply as between a driver and his companion, where the driver, with respect to whom the negligence is alleged, was not the agent of or controlled by such companion.—Donnelly v. Chicago City Ry. Co., 131 Ill. App. 302.

[l] (Ind. 1888) Where the injured party was voluntarily riding in a private conveyance, the negligence of the owner and driver, over whom he had no control, and who was a fit person to manage the horses, should not be so imputed to him as to defeat a recovery on his part for the injuries sustained, assuming that he was without personal fault and that the only wrong on the part of the defendant was negligence.—Brannen v. Kokomo, G. & J. Gravel Road Co., 115 Ind. 115, 17 N. E. 202, 7 Am. St. Rep. 411.

[m] (Ind. 1888) Where an intoxicated driver of a wagon containing passengers attempts by rapid driving to pass a toll gate without paying toll, and the keeper thereupon lowers the pole and injures a person in the wagon, the toll company is not liable, in the absence of proof that the passenger was not negligent in failing to do his best to stop the driver, and that the horses were so close to the gate as to warrant the presumption that the keeper acted willfully.—Brannen v. Kokomo, G. & J. Gravel Road Co., 115 Ind. 115, 17 N. E. 202, 7 Am. St. Rep. 411.

[n] (Kan. 1901) Where one person is driving with another for the mutual pleasure of both, with opportunity to see and equal ability to appreciate the danger, and is in fact looking out for herself, but makes no effort to avoid the danger, such person is chargeable with the want of care which results in injury.—Bush v. Union Pac. R. Co., 62 Kan. 709, 64 Pac. 624.

[o] (Ky. 1891) The negligence of the driver of a vehicle cannot be imputed to a person who accepts his invitation to ride therein, in the absence of evidence that the invitation was accepted with knowledge that the driver was incompetent and unreliable.—Cahill v. Cincinnati, N. O. & T. P. Ry. Co., 92 Ky. 345, 18 S. W. 2.

[p] (Mo. 1904) Where the person riding in a vehicle driven by another knows that the driver is negligent, and he takes no precautions to guard against injury, he cannot recover for an injury; for in such case the negligence of the driver is his own negligence.—Marsh v. Kansas City Southern Ry. Co., 104 Mo. App. 577, 78 S. W. 284.

[q] (Mo. 1908) Where plaintiff, a girl not over 16 years of age, was sitting in the rear of a vehicle, which her stepfather was driving, his negligence in driving into a dangerous position could not be imputed to plaintiff, her status being that of a mere passenger.—Zalotuchin v. Metropolitan St. Ry. Co., 106 S. W. 548.

[r] (Neb. 1906) The doctrine of identification or imputed negligence does not apply to one injured by riding in a private vehicle, where no privity exists between the injured person and the owner or driver of the vehicle, and the injured person is not guilty of contributory negligence.—Loso v. Lancaster County, 109 N. W. 752.

[s] (Ohio, 1895) One who, uninvited or without the knowledge of the driver of a private vehicle, gets upon such vehicle for the purpose of riding, and rides thereon, does not thereby assume the relation of master or superior towards such driver; and therefore he is not chargeable with the negligence of the driver in driving or managing such vehicle.—Cincinnati St. Ry. Co. v. Wright, 54 Ohio St. 181, 43 N. E. 688, 32 L. R. A. 340; Wright v. Cincinnati St. Ry. Co., 9 Ohio Cir. Ct. R. 503, 2 Ohio Dec. 308.

[t] (Tex. 1889) The negligence of the driver of the wagon in which deceased was riding could not be imputed to the deceased, if she used ordinary care

Digitized by Google

to avoid the injury.—Galveston, H. & S. A. R. Co. v. Kutac, 72 Tex. 643, 11 S. W. 127.

II. In Accidents Caused by Maintenance and Operation of Railroads.

[a] Negligence of the driver of a vehicle wherein plaintiff was a passenger by invitation precluded plaintiff from recovering of a railroad company for injuries from a collision at a crossing.

—(Ill. 1906) Illinois Southern Ry. Co. v. Hamill, 128 Ill. App. 152, judgment affirmed (1907) 226 Ill. 88, 80 N. E. 745;
(Iowa, 1874) Payne v. Chicago, R. I. & P. R. Co., 39 Iowa, 523;
(Mass. 1906) Kane v. Boston Elevated Ry. Co., 78 N. E. 485;
(Mich. 1872) Lake Shore & M. S. R. Co. v. Miller, 25 Mich. 274;
(N. Y. 1890) Brickell v. New York Cent. & H. R. R. Co., 120 N. Y. 290, 24 N. E. 449, 17 Am. St. Rep. 648, affirming (1887) 12 N. Y. St. Rep. 450;

CONTRA, see
(Ind. 1891) Miller v. Louisville, N. A. & C. Ry. Co., 128 Ind. 97, 27 N. E. 339, 25 Am. St. Rep. 416; (1897) Lake Shore & M. S. Ry. Co. v. Boyts, 16 Ind. App. 640, 45 N. E. 812;
(Mich. 1904) Hampel v. Detroit, G. R. & W. Ry. Co., 138 Mich. 1, 100 N. W. 1002, 110 Am. St. Rep. 275;
(Mo. 1904) Marsh v. Kansas City Southern Ry. Co., 104 Mo. App. 577, 78 S. W. 284;
(N. C. 1904) Duval v. Atlantic Coast Line R. Co., 134 N. C. 331, 46 S. E. 750, 65 L. R. A. 722, 101 Am. St. Rep. 830.

[b] Where one had no authority over another with whom he was riding when approaching a railroad crossing, any act of the other will not defeat his right of recovery against the railroad company.

—(Ala. 1889) Elyton Land Co. v. Mingea, 89 Ala. 521, 7 South. 666;
(Ga. 1894) Roach v. Western & A. R. Co., 93 Ga. 785, 21 S. E. 67;
(Md. 1886) Philadelphia, W. & B. R. Co. v. Hogeland, 66 Md. 149, 7 Atl. 105, 59 Am. Rep. 159;
(Me. 1888) State v. Boston & M. R. Co., 80 Me. 430, 15 Atl. 36;
(N. Y. 1877) Dyer v. Erie R. Co., 71 N. Y. 228; (1891) Bennett v. New York Cent. & H. R. R. Co., 61 Hun, 623, 16 N. Y. Supp. 765, 40 N. Y. St. Rep. 948;
(Ohio, 1878) Pears v. City of Cleveland, 1 Cleve. Law Rep. 328, 4 Ohio Dec. 329;
(Tex. 1897) Missouri, K. & T. Ry. Co. of Texas v. Rogers, 91 Tex. 52, 40 S. W. 956, reversing judgment (Civ. App.) 40 S. W. 849; (1898) Bryant v. International & G. N. R. Co., 19 Tex. Civ. App. 88, 46 S. W. 82.

[c] (Ala. 1889) The fact that plaintiff, a fireman, and the driver of a hose cart were both in the employ of the city, and engaged in a common enterprise, when the cart tipped over on account of defendant's negligence, did not render them mutually responsible for each other's acts so as to impute the driver's negligence to plaintiff.—Elyton Land Co. v. Mingea, 89 Ala. 521, 7 South. 666.

[d] (Ga. 1892) Where plaintiff was free from negligence, and her injury was due to the concurrent negligence of a railroad company and a person with whom she was riding in a wagon, he not being her servant, and it not appearing that she was the owner of the horse or wagon, that she had any agency or concern in procuring or in driving the same, or that she was aware of any incompetency in the driver, the company was liable to her for all the damages consequent upon the injury, and could take no credit as to any part thereof on account of the contributory negligence of the driver of the wagon. —Metropolitan St. R. Co. v. Powell, 89 Ga. 601, 16 S. E. 118.

[e] (Ga. 1907) The doctrine that the negligence of the driver of a vehicle contributing to cause a collision with a locomotive is not imputable to another, riding by invitation in the vehicle, unless such person had a right or duty to influence the driver's conduct, is applicable where a wife is accompa-

Digitized by Google

nying her husband in a buggy driven by him and a collision occurs between the buggy and a locomotive.—Southern Ry. Co. v. King, 128 Ga. 383, 57 S. E. 687, 11 L. R. A. (N. S.) 829.

[f] (Ind. 1896) The negligence of the driver of a vehicle in crossing a railroad track on the highway cannot be imputed to one riding with him as his guest, who had good reason to believe him to be a careful and competent driver, and was himself without personal fault.—Lake Shore & M. S. Ry. Co. v. Boyts (App.) 43 N. E. 667.

[g] (Ind. 1905) In an action against a railroad for negligently causing the death of plaintiff's decedent while attempting to drive over a crossing, the existence of the marriage relation alone did not charge decedent with the negligence of her husband, who at the time had sole management and control of the team.—New York, C. & St. L. R. Co. v. Robbins (App.) 76 N. E. 804.

[h] (Ind. 1905) The fact that a married woman is riding with her husband, who has entire control of the team while attempting to cross a railroad track, does not relieve her of the duty of exercising care for her own safety in avoiding danger from passing trains.—New York, C. & St. L. R. Co. v. Robbins (App.) 76 N. E. 804.

[i] (Iowa, 1887) In an action to recover for personal injuries sustained by plaintiff, a child 12 years of age, resulting from a locomotive on defendant's railroad striking a carriage in which plaintiff was riding with his mother, the driver of the carriage having attempted to cross the track before the locomotive passed, the evidence showed that the driver was negligent in attempting to cross the railroad track without making an effort to discover whether there was a train approaching. *Held*, that the plaintiff was guilty of contributory negligence, the negligence of the driver being imputed to him, and he could not recover.—Slater v. Burlington, C. R. & N. Ry. Co., 71 Iowa, 209, 32 N. W. 264.

[j] (Kan. 1902) Whether the carelessness of the driver of a wagon can be imputed to one riding with him and injured at a railroad crossing becomes immaterial, where the railroad company was guilty of no negligence towards the occupants of the wagon.—Atchison, T. & S. F. Ry. Co. v. Judah, 65 Kan. 474, 70 Pac. 346.

[k] (Ky. 1906) A person riding in a buggy with a liveryman, whom he has employed to drive him from one town to another, is not chargeable with the negligence of his driver in case of a collision with a train at a highway crossing.—Louisville & N. R. Co. v. Molloy's Adm'x, 91 S. W. 685, 28 Ky. Law Rep. 1113.

[l] (Ky. 1907) Where plaintiff and his companion were engaged in hauling fodder with a team, and plaintiff was injured while his companion was endeavoring to force the horses past the carcass of a horse on defendant railroad company's right of way near a highway, at which the horses were frightened, the relation of master and servant, or joint undertakers, existed between plaintiff and his companion, so that plaintiff was chargeable with the negligence of the latter.—Louisville & N. R. Co. v. Armstrong, 105 S. W. 473.

[m] (Neb. 1896) The driver of a private conveyance is the agent of the passenger so as to charge the latter with the former's negligence in going upon a railroad crossing without first looking and listening for the approach of a train.—Omaha & R. V. Ry. Co. v. Talbot, 48 Neb. 627, 67 N. W. 599.

[n] (N. Y. 1876) A female who accepts an invitation to take a ride with a person in every way competent and fit to manage a horse is not chargeable with his negligence; and contributory negligence upon his part is no defense to an action against a railroad corporation for injuries resulting from a collision.—Robinson v. New York Cent. & H. R. R. Co., 66 N. Y. 11, 23 Am. Rep. 1.

[o] (N. Y. 1898) The fact that a woman who is riding in a carriage at the invitation and as the guest of the driver, a competent and sober man, warns him of danger just before they reach a railway track, does not constitute such an assumption of authority or control as to impute to her liability for his negligence, which contributes to an accident resulting in injury to her.—Bergold v. Nassau Electric R. Co., 30 App. Div. 438, 52 N. Y. Supp. 11.

[p] (N. C. 1907) The negligence of a minor driver of a vehicle belonging to

Digitized by Google

his father in approaching a railroad crossing cannot be imputed to one riding with him, as his guest.—Baker v. Norfolk & S. R. Co., 56 S. E. 553.

III. IN ACCIDENTS CAUSED BY OPERATION OF STREET RAILROADS.

[a] The negligence of the driver of a vehicle in colliding with a street car cannot be imputed to a person riding in the vehicle by invitation of the driver and having no control over the latter.

—(Ark. 1904) Hot Springs St. Ry. Co. v. Hildreth, 72 Ark. 572, 82 S. W. 245;

(Del. 1902) Farley v. Wilmington & N. C. Electric Ry. Co. (Super.) 3 Pen. 581, 52 Atl. 543;

(Ill. 1905) Chicago Union Traction Co. v. Leach, 215 Ill. 184, 74 N. E. 119, affirming judgment (1904) 117 Ill. App. 169;

(N. Y. 1899) Kleiner v. Third Ave. R. Co., 36 App. Div. 191, 55 N. Y. Supp. 394; (1902) Morris v. Metropolitan St. Ry. Co., 170 N. Y. 592, 63 N. E. 1119, affirming judgment (1901) 63 App. Div. 78, 71 N. Y. Supp. 321.

[b] The negligence of a driver of a vehicle is not to be imputed to one who rides with him by invitation and is injured by collision with a street car.

—(Ill. 1907) Eckels v. Muttschall, 82 N. E. 872;

(Md. 1904) United Rys. & Electric Co. v. Biedler, 98 Md. 564, 56 Atl. 813;

(Mo. 1906) Fechley v. Springfield Traction Co., 119 Mo. App. 358, 96 S. W. 421;

(N. J. 1900) Noonan v. Consolidated Traction Co., 64 N. J. Law, 579, 46 Atl. 770;

(N. Y. 1904) Robinson v. Metropolitan St. Ry. Co., 179 N. Y. 593, 72 N. E. 1150, affirming judgment 91 App. Div. 158, 86 N. Y. Supp. 442.

CONTRA, see

(Mass. 1904) Evensen v. Lexington & B. St. Ry. Co., 187 Mass. 77, 72 N. E. 355.

[c] Contributory negligence of the driver of a fire truck, which collided with a street car, is not imputable to a fireman on the truck; he neither having control over the driver nor being under his authority.

—(Ala. 1902) Birmingham Ry. & Electric Co. v. Baker, 132 Ala. 507, 31 South. 618;

(N. Y. 1903) Geary v. Metropolitan St. Ry. Co., 177 N. Y. 535, 69 N. E. 1123, affirming judgment 84 App. Div. 514, 82 N. Y. Supp. 1016.

[d] (Iowa, 1906) In an action against a street railroad for the death of a member of a municipal fire department, who was riding on a hose wagon, in a collision between the wagon and the car, the negligence of the driver of the wagon was not imputable to decedent.—McBride v. Des Moines City Ry. Co., 109 N. W. 618.

[e] (Ky. 1908) Where plaintiff, the rear man on an ice wagon, was injured in a collision with a street car, the negligence of the driver of the wagon would not be imputed to plaintiff, though they were fellow servants of the same master; the driver not being the agent or servant of plaintiff.—Paducah Traction Co. v. Sine, 111 S. W. 356.

[f] (Mass. 1907) Where a person was injured through the negligence of a third person and the concurring negligence of one with whom she was riding as guest, the driver's negligence would not be imputed to her, where in entering and continuing in a conveyance she acted with reasonable caution, and had no ground to suspect incompetency and no cause to anticipate negligence on the part of the driver, and if the impending danger, although in part produced by the driver, was so sudden or of such a character as not to permit or require her to act for her own protection.—Shultz v. Old Colony St. Ry., 193 Mass. 309, 79 N. E. 873.

[g] (Mich. 1904) The negligence of the driver of a fire engine was not imputable to the engineer, who, in the performance of his duty, was riding on the rear end of the engine when it collided with a street car.—McKernan v. Detroit Citizens' St. Ry. Co., 138 Mich. 519, 101 N. W. 812, 11 Detroit Leg. N. 685, 68 L. R. A. 347.

Digitized by Google

[h] (Minn. 1905) The negligence of a husband at the time of a collision with a street car cannot be imputed to his wife, who was riding with him. —Teal v. St. Paul City Ry. Co., 96 Minn. 379, 104 N. W. 945.

[i] (Mo. 1903) A person seated by the driver of a wagon approaching a street railway crossing at a careless speed cannot rely implicitly on the care of the driver, and if he makes no effort to have the speed diminished, and his action contributed to a collision with a street car, he cannot recover for his injuries.—Holden v. Missouri R. Co., 177 Mo. 456, 76 S. W. 973.

[j] (Mo. 1903) Where the driver of an ice wagon had charge of the wagon and the driving, and handed out ice to a boy who rode with him and who delivered the ice to the customers, and the boy had nothing to do with the driving, the negligence of the driver in driving in dangerous proximity to a street railroad track was not imputable to the boy.—Baxter v. St. Louis Transit Co., 106 Mo. App. 337, 78 S. W. 70.

[k] (Mo. 1906) A boy 16 years of age was in a vehicle drawn by a horse driven by his uncle. The boy had no control over the movement of the vehicle. *Held*, that the negligence of the driver, causing a collision with a street car, was not imputable to the boy.—Peterson v. St. Louis Transit Co., 199 Mo. 331, 97 S. W. 860.

[l] (N. Y. 1899) Where it does not appear that plaintiff had any control or management of a wagon driven by his fellow servant, and in which he was riding when the accident occurred, the doctrine that the driver's negligence is to be imputed to him will not apply in an action for damages for injuries from a collision between the wagon and defendant's street car.—Anderson v. Metropolitan St. Ry. Co. (Sup.) 30 Misc. Rep. 104, 61 N. Y. Supp. 899.

[m] (N. Y. 1900) Where plaintiff was injured by collision of a fire engine, on the tender of which he was riding, and a street car, the negligence of the driver of the engine cannot be imputed to him. Judgment (City Ct.) 32 Misc. Rep. 780, 66 N. Y. Supp. 1131, affirmed.—Galligan v. Metropolitan St. Ry. Co. (Sup.) 33 Misc. Rep. 87, 67 N. Y. Supp. 180.

[n] (N. Y. 1901) Plaintiff, proprietress of a school for children, owned and operated a bus for taking the children to and fro between their homes and the school. The horse used therewith and the driver were procured by her from a livery stable keeper; she paying said keeper a certain amount per month for them. *Held*, that the driver was, in the driving of the bus, plaintiff's servant, so that his contributory negligence in a collision with a street car was attributable to her.—Reed v. Metropolitan St. Ry. Co., 58 App. Div. 87, 68 N. Y. Supp. 539.

[o] (N. Y. 1904) In an action against a street railroad company for injuries received in a collision between a wagon in which plaintiff was riding and one of defendant's cars, alleged to have resulted from the negligence of the defendant's motorman, it appeared that the plaintiff was riding gratuitously in the wagon at the time of the collision, on the invitation of the driver, who was also its owner. The driver was engaged in the business of carting ice for the plaintiff and his customers and others, and it did not appear that plaintiff did, or was authorized to, exercise any control over the wagon. *Held*, that the driver was not a servant of plaintiff, and hence the negligence of the driver could not be imputed to plaintiff.—Scarangello v. Interurban St. Ry. Co. (Sup.) 90 N. Y. Supp. 430.

[p] (N. Y. 1905) Plaintiff's testator was injured through a collision between a covered express wagon, in which he was riding, and a car belonging to defendant. Testator had nothing to do with the driving of the express wagon, and was not sitting on the driver's seat, but on a trunk inside the wagon, near the rear end. It did not appear that he was in a position to see the approaching car, or that he did see it. *Held*, in an action for the injuries, that any negligence of the driver of the express wagon was not imputable to testator.—Penna v. Interurban St. Ry. Co. (Sup.) 48 Misc. Rep. 647, 96 N. Y. Supp. 208.

[q] (N. Y. 1906) The negligence of the driver of a team, with which a street car collided through negligence of the motorman, will not be imputed to an occupant of the team injured by the collision, though he and the driver were engaged in a common employment; he not having done or attempted to do

Digitized by Google

anything to influence the driver.—Scheib v. New York City Ry. Co., 115 App. Div. 578, 100 N. Y. Supp. 986.

[r] (N. Y. 1907) Where the servant was riding on a truck driven by his master at the time of the servant's injury in a collision between the truck and one of defendant's street cars, the negligence of the master, if any, was not imputable to the servant.—Doctoroff v. Metropolitan St. Ry. Co. (Sup.) 55 Misc. Rep. 216, 105 N. Y. Supp. 229.

[s] (N. Y. 1908) Where plaintiff's intestate, while riding as a mere passenger in an automobile and having nothing to do with the management or control of the machine, was injured in a collision between the machine and defendant's street car, he was not chargeable with the negligence of the driver of the machine. Judgment (1907) 119 App. Div. 487, 104 N. Y. Supp. 95, affirmed.—Ward v. Brooklyn Heights R. Co., 83 N. E. 1134.

[t] (N. Y. 1908) Where plaintiff was riding with the driver of a furniture truck at the time plaintiff was injured in a collision between the truck and one of defendant's street cars, plaintiff was not chargeable with the negligence of the driver, but was bound to show that he exercised the care the situation demanded.—Caminez v. Brooklyn, Q. C. & S. R. Co. (Sup.) 111 N. Y. Supp. 384.

IV. In Accidents Caused by Defective Street or Highway.

[a] Where, at the time plaintiff was injured by reason of a defect in a street or highway, he was riding with another at the latter's invitation, but had no control over the driver in the management of the team, in the absence of negligence on plaintiff's part, the negligence of the driver, if any, could not be imputed to plaintiff.

—(Kan. 1896) City of Leavenworth v. Hatch, 57 Kan. 57, 45 Pac. 65, 57 Am. St. Rep. 309;
(Minn. 1886) Follman v. City of Mankato, 35 Minn. 522, 29 N. W. 317, 59 Am. Rep. 340;
(N. H. 1887) Noyes v. Town of Boscawen, 64 N. H. 361, 10 Atl. 690, 10 Am. St. Rep. 410;
(Wash. 1903) Shearer v. Town of Buckley, 31 Wash. 370, 72 Pac. 76.

[b] The negligence of one who drives a vehicle over a defective street cannot be imputed to a person riding with him by invitation, and ignorant of the defects.

—(Ill. 1895) City of Carmi v. Ervin, 59 Ill. App. 555;
(Ky. 1905) Bevis v. Vanceburg Telephone Co., 89 S. W. 126, 28 Ky. Law Rep. 142;
(N. Y. 1904) Mack v. Town of Shawangunk, 98 App. Div. 577, 90 N. Y. Supp. 760.

[c] Contributory negligence of the driver of a private conveyance, in which a person is voluntarily riding at the time of receiving an injury from a defective highway, is imputable to the person so injured, so as to prevent a recovery.

—(Mont. 1894) Whittaker v. City of Helena, 14 Mont. 124, 35 Pac. 904, 43 Am. St. Rep. 621;
(Wis. 1879) Otis v. Town of Janesville, 47 Wis. 422, 2 N. W. 783.

[d] (Ga. 1907) In an action for injuries to a wife while riding with her husband, by an alleged defect in a bridge, the court properly charged that the husband's knowledge would not affect the wife's right to recover.—City of Cedartown v. Brooks (App.) 59 S. E. 836.

[e] (Ind. 1902) Where a traveler, riding with another as his guest on a dark night along an unlighted street, with an equal opportunity to discover and avoid danger, and with equal knowledge that they were driving at a reckless speed, is injured by collision with a water hydrant at its proper place in the street, he is guilty of such negligence as precludes a recovery against the city.—City of Vincennes v. Thuis, 28 Ind. App. 523, 63 N. E. 315.

[f] (Minn. 1901) Where plaintiff was injured by being thrown from a buggy driven by another in which she was journeying, by reason of the defective condition of the street, she was not engaged in joint enterprise with the driver,

Digitized by Google

so that his negligence was imputable to her.—Cunningham v. City of Thief River Falls, 84 Minn. 21, 86 N. W. 763; Adams v. Same, 84 Minn. 30, 86 N. W. 767.

[g] (Minn. 1902) Plaintiff, a young woman, was a member of a picnic party consisting of young men and women. The latter furnished the lunches, and the former the transportation, an omnibus drawn by four horses, as to the hiring or driving of which the women had nothing to do. The conveyance was overturned, and plaintiff injured by the negligence of the city as to one of its streets and the contributory negligence of a man who was driving. *Held*, that his negligence could not be imputed to plaintiff.—Koplitz v. City of St. Paul, 86 Minn. 373, 90 N. W. 794, 58 L. R. A. 74.

[h] (Neb. 1906) One who was injured by reason of a defective bridge while riding in a private vehicle may recover from a county otherwise liable, notwithstanding the negligence of the driver which may have contributed to the injury; the injured party being free from negligence and having no authority or control over the driver.—Loso v. Lancaster County, 109 N. W. 752.

[i] (N. D. 1895) One who, at her own request, was riding in a buggy with another, who owned and controlled the horse and conveyance, and whose capacity to drive there was no reason to question, was not imputable with the driver's negligence in attempting to drive past an obstruction in the street.—Ouverson v. City of Grafton, 5 N. D. 281, 65 N. W. 676.

[j] (Wis. 1878) The driver of a private conveyance is the agent of the person in such conveyance, so that his negligence, contributing to the injury complained of by such person, as caused by a defective highway, will defeat the action.—Prideaux v. City of Mineral Point, 43 Wis. 513, 28 Am. Rep. 558.

(161 Fed. 900.)

In re FAULKNER.

(Circuit Court of Appeals, Eighth Circuit. May 4, 1908.)

No. 87.

BANKRUPTCY—PROOF OF CLAIM—SUFFICIENCY OF PROOF—AMENDMENT AFTER EXPIRATION OF YEAR.

Within a year after an adjudication in bankruptcy a creditor filed a paper, denominated an "application for sale of collateral," with the referee. Such paper was signed and sworn to, and set out certain notes given by the bankrupt to the creditor, alleged that they were due and unpaid, and also described certain securities given as collateral to such notes, and asked an order for their sale, which was granted. An order was subsequently made confirming the sale and applying the proceeds upon the notes. *Held* that, as such paper contained all the statements essential to a proof of claim, it was amendable after the expiration of the year for filing claims, when the amount due on the claims was ascertained by the sale of the collateral, and that, as so amended, the creditor was entitled to have it considered as his proof of claim for the balance due him.

Philips, District Judge, dissenting.

Petition to Revise Proceedings of the District Court of the United States for the District of Kansas, in Bankruptcy.

The question involved in this petition to revise is whether two certain claims of the petitioner, Faulkner, against the estate of Charles J. Devlin, bankrupt, should have been allowed and permitted to participate in the assets of the estate of the bankrupt. The referee and the judge of the District Court for the District of Kansas ruled adversely to the petitioner, and that is the ruling we are asked to revise. Devlin was adjudicated a bankrupt on July 7, 1905, and some efforts followed to secure a settlement with his creditors. These efforts proved ineffectual, and shortly before the year expired after the date of the adjudication within which claims could be proven against the estate

Digitized by Google

(Bankr. Act July 1, 1898, c. 541, § 57n, 30 Stat. 561 [U. S. Comp. St. 1901, p. 3444]), on June 20, 1906, the petitioner filed with the referee a paper, signed and sworn to by him, as follows:

"Application for sale of Collateral. Now comes E. O. Faulkner, and shows to this court that he is the holder of two certain obligations, one of seventy-five hundred dollars ($7,500) indorsed by C. J. Devlin, of which a copy is hereto attached, with all indorsements thereon and made a part of this application, and which obligation was duly protested and C. J. Devlin held as an indorser thereon. Under the terms of the said obligation, marked 'Exhibit A,' the applicant was to receive $7,500, payable February 17, 1906, with 7 per cent. interest payable semiannually. The said obligation was personally delivered by the said C. J. Devlin to this applicant, and at the time of the delivery the said Devlin, as collateral security for the said obligation, turned over to this applicant and placed in his possession 10 first mortgage gold bonds of the Marquette Third Vein Coal Company, being bonds 177 to 186, inclusive, upon which there were attached and still remain the coupons of July 1, 1905, and all subsequent coupons. Said bonds draw interest at 5 per cent. annually. This applicant has received no money from the said Marquette Third Vein Coal Company, J. S. Wylie, or from the said C. J. Devlin in payment of the said obligation marked 'Exhibit A,' and the same is wholly due and unpaid; nor has any interest been paid upon the said bonds. Applicant further says that the said obligation for which the said collateral was pledged was for an actual loan of money in the ordinary course of business, and was in all respects bona fide, and the deposit of the said collateral was made at a time when your petitioner had no reason to believe and did not believe that the said coal company or the said C. J. Devlin were insolvent, if, indeed, they were at that time. Your petitioner further says that at Topeka, Kan., on June 14, 1904, the bankrupt C. J. Devlin, made, executed, and delivered to him his own certain promissory note in the sum of twenty-five hundred dollars ($2,500), a copy of which is hereto attached, marked 'Exhibit B,' and made a part hereof. At the time of the delivery of the said note to the applicant as collateral security for the payment of said note certificate No. 449 of the Bank of Topeka, Kan., representing 25 shares in said bank, of the par value of $2,500, and also as further collateral certificate No. 278 of the First National Bank, Topeka, Kan., representing 5 shares in said bank, of the par value of $100 each. Nothing has been paid upon the said promissory note marked "Exhibit B,' and the same is wholly due and unpaid, and the applicant says that the said obligation marked 'Exhibit B' was for a sum of money actually loaned in the ordinary course of business, which was in all respects bona fide, and the deposit of the said collateral was made at a time when the applicant had no reason to believe and did not believe that the said Devlin was insolvent, if, indeed, he was at that time. The applicant further says that the value of the said Marquette Third Vein Coal Company bonds are 90 per cent. flat. The market value of the bank stock of the Bank of Topeka is worth 100 cents on the dollar or upwards. The bank stock of the First National Bank of Topeka is of unknown market value to this applicant. The applicant asks that he be given permission to sell the foregoing collateral at public sale under reasonable terms and conditions to the party who will pay the highest cash price therefor, and that if the proceeds of the sale exceed in amount the sum due on the said obligations that such surplus be applied to the payment of other obligations held by this applicant against C. J. Devlin, but which do not appear in the foregoing application, and your petitioner asks for such other relief as he may be entitled to in law."

On July 5, 1906, the referee made a finding and order, the concluding parts of which are as follows:

"(3) There is due to the said Faulkner from the said Devlin the following sums: $7,500, with interest at 7 per cent. from February 17, 1905, and $2,500, with interest at 7 per cent. from June 14, 1904. As a conclusion of law the referee finds that the said Faulkner is entitled to sell said collateral in payment of the obligations of the said Devlin. It is therefore ordered that E. O. Faulkner has permission to sell said collateral at a price not less than three-fourths of the value as above fixed, and apply the same upon the said indebtedness. It is further ordered that the said sales take place at the front

Digitized by Google

door of the Central National Bank of Topeka, Kan., upon Saturday, July 14, 1906, at 11 o'clock a. m., and that report be made of said sale for the purpose of confirmation and distribution of the funds, and that when said sale is confirmed the title to the said collateral so sold shall pass to the purchaser."

Pursuant to the terms of the order the collateral was sold for the aggregate sum of $7,700, and a report of sale was made to the referee. On July 18, 1906, the sale was confirmed by the referee, and $7,600 out of the proceeds were ordered to be credited upon the note of $7,500 and interest, and $100 were ordered to be credited upon the note of $2,500. Afterwards, and on the same day, the petitioner filed with the referee his three affidavits, one of which is as follows: "At Topeka, in the county of Shawnee and state of Kansas, came E. O. Faulkner, of said county and state, and made oath and said: That the said Chas. J. Devlin, the above-named bankrupt, at and before the filing of the petition in said matter, was and still is justly indebted to the said deponent in the sum of seventy-five hundred dollars. That the consideration of said debt is as follows: Borrowed money drawing 7 per cent. interest from February 17, 1905, as shown by a note of which a copy is hereunto attached, marked 'A,' and made a part thereof. Judgment has been rendered thereon in this court. That no part of said debt has been paid, except by sale of collateral as hereinafter set forth, leaving due July 5, 1906, $625, for which said sum, or any part thereof, this deponent says that he has not, nor has any person by his order, or to his knowledge or belief, for his use, had or received any manner of satisfaction or security whatsoever, except as hereinafter set forth by the sale of said collateral."

There was another affidavit of like general tenor relating to the $2,500 note and disclosing a balance due the petitioner thereon of $2,660. The third affidavit so filed detailed the proceedings already referred to by which the collateral had been sold and the proceeds applied upon the notes, and, after setting forth the efforts made by creditors to bring about a settlement with the bankrupt, continues thus: "That affiant took no steps concerning his claim and collateral, expecting that some plan might be devised by the said creditors' committee to carry out the result they sought"—and he then prayed "that this application may be considered as amendatory and supplemental to his claim filed July 5, 1905, and that the residue of said claim against the estate of said C. J. Devlin be liquidated and allowed as above set forth." It further appeared in the affidavit that the bankrupt had died since the adjudication, and that no discharge had been granted to him, and no dividend declared in the estate.

The trustees objected to the allowance of the balance due the petitioner upon the claims, and moved to expunge them, for the reason that they were not filed within one year from the date of the adjudication. The referee sustained the motion of the trustees and made an order disallowing the claims, and the district judge, on a petition for review before him, approved his action and made an order accordingly.

Eugene F. Ware (Ralph Nelson and E. H. Ware, on the brief) for petitioner.

John S. Dean and A. A. Hurd, for respondent.

Before SANBORN and ADAMS, Circuit Judges, and PHILIPS, District Judge.

ADAMS, Circuit Judge (after stating the facts as above). Section 57 of the bankruptcy act (Act July 1, 1898, c. 541, 30 Stat. 561 [U. S. Comp. St. 1901, p. 3444]) provides that:

"Proof of claims shall consist of a statement under oath in writing signed by a creditor setting forth the claim, the consideration therefor and whether any and if so what securities are held therefor and whether any and if so what payments have been made thereon and that the sum claimed is justly owing from the bankrupt to the creditor."

Digitized by Google

It matters not what the paper filed with the referee on July 5, 1905, was styled. Scrutiny of it discloses that it contained every essential statement required by section 57 to constitute proof of a claim, and fully and accurately informed the court of the amount of petitioner's claims and the securities held for their payment. The referee by his order made a finding of the exact sums due the petitioner, as well as the amount of interest thereon, and ordered the collateral sold and the proceeds to be applied on "said indebtedness," and that report of sale be made to him for confirmation. All this was done within the year following the date of the adjudication, and it cannot be denied that it constituted a complete scheme by the execution of which the balance due the petitioner after application of the proceeds of sale of the collateral could be ascertained from the court records. No further act on the part of the petitioner was necessary to definitely fix the balance due him. Notwithstanding this, however, he, after the year expired, out of abundant precaution made a résumé of the proceedings taken and the result thereof, and definitely stated the same, and formally asked for an allowance of the balance so found to be due him, in order that he might participate pro rata with other unsecured creditors in the assets of the bankrupt's estate. This was denied, and his claim was expunged. We think this was wrong. The limitation of time within which proofs of claim should be made must necessarily be observed. Such disposition of bankruptcy cases that creditors may expeditiously realize what they may is important and necessary; but the substance of things, and not the forms merely, should be observed. Bankruptcy proceedings are equitable in their nature, and should be as far as possible conducted on broad lines to accomplish the ultimate purpose of distributing the assets of a bankrupt pro rata among his creditors. Atchison, T. & S. F. Ry. Co. v. Hurley, 82 C. C. A. 453, 153 Fed. 503, 508.

In this case everything necessary to determine the balance due the petitioner was done before the year expired within which proof of claims could be made. All the statements required by section 57 had been made, the debt had been judicially determined and stated, the collateral had been ascertained, an upset price fixed, a sale ordered, and provision had been made for the application of the proceeds of sale to the satisfaction of the debt pro tanto. The working out of this scheme necessarily and accurately resulted in the amount due the petitioner. "Id certum est quod certum reddi potest." Assuming, however, but not deciding, that the proceedings taken and orders made did not constitute technical proof of petitioner's claims within the year, as required by section 57, we have no doubt they constituted such substantial showing of it as warranted the amendment of the original proof of claim as made by the petitioner in his affidavits filed July 18, 1906. Loveland on Bankruptcy (3d Ed.) § 92, where many supporting authorities are cited, lays down as an accepted principle that the courts should be liberal in awarding amendments to subserve the ends of justice, and says that:

"An amendment may be allowed at any stage in the proceedings as justice may require."

Digitized by Google

This court held, in Re Plymouth Cordage Co., 68 C. C. A. 434, 135 Fed. 1000, that the fact that the petition contained no averment that the alleged bankrupt was not a wage earner or farmer is remediable by amendment, and in Taft Co. v. Century Savings Bank, 72 C. C. A. 671, 141 Fed. 369, 372, that even jurisdictional facts may be supplied by an amendment of the petition after an appeal to this court. The Court of Appeals for the Second Circuit, in Re Roeber, 62 C. C. A. 122, 127 Fed. 122, held that a petition filed within a year after adjudication, containing averments that there was due and owing to the petitioner a certain sum of money for the payment of which a certain fund then in court was security, which was obviously intended to secure an appropriation of that fund only, contained the substance of a proof of claim, which was amendable after the year expired, although the petition as filed was not sworn to by the claimant and was otherwise technically defective. Judge Lacombe, speaking for the court, said:

"Bankruptcy courts have the usual power of courts of justice, upon motion and for good cause, to allow amendments. All parties were advised of the claim within the year. There is no dispute that the amount claimed is justly owing from the bankrupt. The amendment was in furtherance of justice, and within a legitimate exercise of the power of amendment, under the authorities."

In Buckingham v. Estes, 63 C. C. A. 20, 128 Fed. 584, the Court of Appeals for the Sixth Circuit considered a case where a petition had been filed within a year after the adjudication of bankruptcy to establish a resulting trust in some land standing in the name of the bankrupt, and also for an accounting concerning rents received by him. The case resulted in a decree as prayed for, but the rents were not ascertained until after the year expired when proof was made in usual form. Objection was made to its allowance on the ground that the proof was made too late, but the court held that the original petition stated the substance of a claim, and that it was amendable after the year expired, when the amount actually due had been ascertained. Judge Lurton, speaking for the court, said:

"It would be a narrow construction of sections 57 and 57n which would not regard a claim so presented and litigated in a bankrupt proceeding as 'proven' within the limitation of the section. A claim 'proven' within the year is amendable after the lapse of the year, and the court below probably regarded her petition as a 'statement under oath, in writing, signed by a creditor, setting forth the claim,' etc., and therefore subject to amendment, to comply with the further formalities of section 57. In this the court did not err."

Hutchison v. Otis, 190 U. S. 552, 555, 23 Sup. Ct. 778, 47 L. Ed. 1179, is cited.

None of the cases, supra, presented so complete a proof of debt, such an accurate compliance with the requirements of section 57 within the permissible year, as is disclosed by the record in this case. Both reason and authority we think unite in favor of permitting Faulkner to make formal proof of the balance due him as undertaken by him. The learned district judge erred in not permitting him to do so. Accordingly the orders of the referee disallowing the claims, and the order of the district judge made on September 16, 1907, approving and con-

Digitized by Google

firming the orders of the referee, must be set aside, with directions given to the bankruptcy court to consider the amended claims as made, and, if found valid, to allow them.

It is so ordered.

PHILIPS, District Judge, dissents.

(161 Fed. 905.)

SWAN et al. v. WILEY, HARKER & CAMP CO.

(Circuit Court of Appeals, Second Circuit. March 10, 1908.)

No. 159.

SHIPPING—CHARTER PARTY—DEMURRAGE.

Under a charter party requiring the charterer to discharge the vessel at New York with "customary dispatch" the lay days for discharging began to run when the vessel reached the berth designated by the charterer, although she was obliged to wait her turn to enter, there being no proof of any custom of the port to require her to wait her turn or that the charterer should be allowed any particular time in case the berth was full.

[Ed. Note.—For cases in point, see Cent. Dig. vol. 44, Shipping, § 582.

Demurrage, see notes to Harrison v. Smith, 14 C. C. A. 657; Randall v. Sprague, 21 C. C. A. 337; Hagerman v. Norton, 46 C. C. A. 4.]

Appeal from the District Court of the United States for the Southern District of New York.

Hyland & Zabriskie (Nelson Zabriskie, of counsel), for appellants.

Wing, Putman & Burlingham (James Forrester, of counsel), for appellees.

Before LACOMBE, COXE, and WARD, Circuit Judges.

WARD, Circuit Judge. This is a libel for demurrage by the owners of the barkentine Herbert Fuller against the charterers. The charter party, made between the master of the first part and the charterers of the second part, contains the following clause:

"It is agreed that the lay days for loading and discharging shall be as follows (if not sooner dispatched), commencing from the time the vessel is ready to receive or discharge cargo. For loading, thirty-five thousand feet per day, Sundays and holidays excepted and customary dispatch discharging, and that for each and every day's detention by default of the said party of the second part or agent $69.70/100 dollars per day, day by day, shall be paid by the said party of the second part, or agent, to the said party of the first part, or agent."

We are saved the necessity of inquiring what is customary dispatch in discharging by the admission in the answer that it is at the rate of 35,000 feet per day, which would make the time for discharging, having reference to the amount of lumber carried, 15½ days. Nothing is said about excepting Sundays and holidays, but the parties appear to have acted on the theory that they should be excepted during the running of the lay days. The effect of the provision in the charter party is that the charterer agrees to receive the cargo as delivered within reach of the vessel's tackles within the period of 15½ days, and

Digitized by Google

that he will pay demurrage day by day for any delay beyond that time, caused by his own default. Carver on Carriage of Goods by Sea, § 608.

The first question is, when was the vessel ready to discharge cargo so that the lay days began to run? Was it on March 10th, when she was ready to go into her berth had it been clear, as the libelant contends, or March 14th, when she actually did get in, as the respondents claim? March 8th the vessel arrived at Red Hook, reported, and was ordered to a slip at 149th street, Harlem. She proceeded the next day to that place, but was obliged to lie outside another vessel at the bulkhead until March 14th before she could get into her berth. Although the vessel only undertook to deliver at the port of New York, no particular place being named, still it was her duty to discharge at such a berth as the charterer might designate. It was likewise the duty of the charterer to name a proper berth—that is, one into which she could get—and, if delay was caused by its not doing so, the loss should fall upon it. No custom was proved that a vessel should wait her turn if the berth were full, or that any particular time should be allowed the charterer in that case, and the weight of testimony on that subject is against the existence of any such custom. For these reasons we think the lay days began to run March 10th.

The charterer was entitled to 15½ days, Sundays and holidays, upon the apparent understanding of the parties, being excepted, before incurring any liability for demurrage. The District Judge found that the discharge was delayed during the running of the lay days by the blocking of the wharf, but held that the vessel was not at fault on this account, so that no further consideration need be given the subject. In addition to the exception of Sundays and holidays, he gave the charterer the benefit of time lost by bad weather (although nothing was written or said about such exception) five days in all, making the lay days terminate in the first half of March 31st. From that time the charterers' liability for demurrage began. The discharge continued uninterrupted either by bad weather or by blocking of the wharf until April 8th, and the libelant was rightly awarded demurrage for each of these days.

The decree is affirmed, with interest and costs.

(161 Fed. 906.)

ANDERSON v. NEWHALL.

(Circuit Court of Appeals, Second Circuit. March 10, 1908.)

No. 146.

1. CUSTOMS DUTIES—BAY RUM—PORTO RICO.

Foraker Act April 12, 1900, c. 191, § 3, 31 Stat. 77, authorized, on articles from Porto Rico, coming into the United States, the imposition of a tax equal to the internal revenue tax imposed in the United States "upon the like articles of merchandise of domestic manufacture." *Held* as to Porto Rican bay rum that, as there is no internal revenue tax, eo nomine, upon domestic bay rum, it is not subject to this provision, notwithstanding that a tax is provided for "distilled spirits."

Digitized by Google

2. SAME—"DISTILLED SPIRITS"—BAY RUM.

Bay rum is not within the enumeration of "distilled spirits," defined in section 3248, Rev. St. (U. S. Comp. St. 1901, p. 2107), as "ethyl alcohol, * * * including all dilutions and mixtures of this substance."

[Ed. Note.—For other definitions, see Words and Phrases, vol. 3, pp. 2129, 2130.]

In Error to the Circuit Court of the United States for the Southern District of New York.

These proceedings were brought in behalf of Charles W. Anderson, United States internal revenue collector for the Second district of New York, plaintiff in error and defendant below, against E. Harold Newhall, defendant in error and plaintiff below. The case involves the following provisions of law:

"That on and after the passage of this act, all merchandise coming into the United States from Porto Rico * * * shall be entered at the several ports of entry upon payment of fifteen per centum of the duties which are required to be levied * * * upon like articles of merchandise imported from foreign countries; and in addition thereto, upon articles of Porto Rican manufacture coming into the United States and withdrawn for consumption or sale upon payment of a tax equal to the internal revenue tax imposed in the United States upon the like articles of merchandise of domestic manufacture." Extract from Foraker Act April 12, 1900, c. 191, § 3, 31 Stat. 77.

"Distilled spirits, spirits, alcohol, and alcoholic spirit, within the true intent and meaning of this act, is that substance known as ethyl alcohol, * * * including all dilutions and mixtures of this substance." Extract from section 3248, Rev. St. (U. S. Comp. St. 1901, p. 2107).

"There shall be levied and collected on all distilled spirits on which the tax prescribed by law has been paid, a tax of seventy cents on each proof gallon." Extract from section 3251, Rev. St. (U. S. Comp. St. 1901, p. 2108).

"All products of distillation, by whatever name known, which contain distilled spirits or alcohol, on which the tax imposed by law has not been paid, shall be considered and taxed as distilled spirits." Section 3254, Rev. St. (U. S. Comp. St. 1901, p. 2111).

The opinion filed by the court below reads as follows:

HOUGH, District Judge. It is provided by the act of April 12, 1900, c. 191, § 3, 31 Stat. 77, commonly known as the "Foraker Bill," that "upon articles of merchandise of Porto Rican manufacture [there shall be assessed] a tax equal to the internal revenue tax imposed in the United States upon the like articles of merchandise of domestic manufacture." The plaintiff, having imported from Porto Rico certain bay rum, has been compelled, after due protest, to pay a tax, not upon the bay rum, but upon the alcohol therein contained, the Treasury Department holding that, while no "internal revenue tax is imposed on bay rum as such, a tax is imposed upon the spirits therein contained." Int. Rev. Dec. 404, of 1901. The statutes imposing the tax here in question are asserted to be Rev. St. § 3248 (U. S. Comp. St. 1901, p. 2107), and section 48 of chapter 349 of Act Aug. 27, 1894, 28 Stat. 563 (U. S. Comp. St. 1901, p. 2109), amending Rev. St. § 3251 (U. S. Comp. St. 1901, p. 2108). It being admitted that there is no internal revenue tax upon bay rum as such, and that bay rum is an article of merchandise, and also a manufactured article of merchandise, it appears to me that the plain language of the Foraker bill requires a direction in favor of the plaintiff.

The act first above quoted from is the last statute on the subject, and what it plainly requires must be observed. It may be true that it was the purpose of that act to produce equality between American and Porto Rican producers; but, if apt words have not been used for that purpose, the assumed existence of the purpose furnishes no reason for straining the meaning of the words that were employed. The words are to be taken not only in their plain, but in their commercial, meaning; and it is not to be doubted that when a merchant speaks of bay rum he means a thing which is commercially wholly different from the "distilled spirits, spirits, alcohol and alcoholic spirits" attempted to be defined by Rev. St. § 3248. It follows that as there is no in-

Digitized by Google

ternal revenue in the United States upon bay rum as "bay rum," there is no tax upon the like article when of Porto Rican manufacture, and imported into the United States from that island.

Turning to the contention of the defendant, I cannot agree that bay rum is either a dilution or a mixture of distilled spirits, within the meaning of section 3248. If it is, it would follow that a long list of other articles commercially known by distinctive names should be regarded as "mixtures" of distilled spirits because liquor in some form is found in them.

As to section 3251 as amended, the operative words are that "there shall be levied * * * on distilled spirits that * * * may be * * * produced in the United States" a certain tax. It is certainly straining this statute to make it applicable to the alcohol in Porto Rican bay rum. It is fully satisfied by considering as taxable the article commercially known as "distilled spirits" which may be produced by any process from, for example, bay rum. It is no answer to say, as has been asserted by the commissioner of internal revenue, that the discovery of such practices would be "obviously difficult and in many cases impossible." The question is not whether discovery of unlawful transactions is difficult, but what is the law. It is sufficient to add that I entirely agree with the remarks of Thomas, J., in Newhall v. Jordan (C. C.) 149 Fed. 586, E. D. N. Y., opinion filed December 6, 1906.

Verdict is directed for the plaintiff in the sum of $506.22, with interest thereon from May 8, 1906, to May 21, 1907.

Winfred T. Denison, Asst. U. S. Atty. (Francis W. Bird, Asst. U. S. Atty., on the brief), for plaintiff in error.

John David Lannon, for defendant in error.

Before LACOMBE, COXE, and WARD, Circuit Judges.

PER CURIAM. The sole question presented by this writ of error is whether bay rum manufactured in Porto Rico and imported from that island, in April, 1906, was liable to taxation as distilled spirits under the provisions of section 3 of the Foraker Act (Act April 12, 1890, c. 191, 31 Stat. 77), taken in connection with sections 3248, 3251, and 3254 of the United States Revised Statutes.

The Foraker act provides that "articles of merchandise of Porto Rican manufacture" coming into the United States and withdrawn for consumption or sale shall be subject to "a tax equal to the internal revenue tax imposed in the United States upon the like articles of merchandise of domestic manufacture." It would seem that under this provision of the law the duty of the internal revenue collector was plain, namely, to ascertain what tax was imposed on domestic bay rum, and, if none were imposed, permit the Porto Rican bay rum to be withdrawn free of tax. Instead of doing so, the collector ascertained the constituent ingredients of the importation, found that alcohol predominated, and imposed a tax thereon as "distilled spirits." It is conceded that bay rum is an old and well-known article of commerce used exclusively as a toilet preparation, wash, or cosmetic, and is never sold or used as a beverage. It is also conceded that there is no internal revenue tax, eo nomine, upon bay rum of domestic manufacture. No fraud is charged or suggested regarding the importation in controversy, which was brought here to be used as bay rum has always been used—as a cosmetic or toilet water.

The fact that the alcohol in the bay rum may be used for other purposes, if true, would not justify a construction of the law which is

Digitized by Google

plainly antagonistic to its express provisions. We think, however, that the contention that distilled spirits imported from Porto Rico may evade the tax under the guise of bay rum, is more apparent than real. It is true that by an elaborate process the alcohol may be separated from the other ingredients composing bay rum, but there is testimony that it retains the odor of bay, and cannot be used as ordinary alcohol is used.

Again, the segregating process involves redistillation, which would subject the product to the internal revenue tax, if not to forfeiture. If the law is to be strained to cover all articles from which alcohol may be obtained by distillation, it would be a hazardous undertaking to import molasses from Porto Rico—rum being a distilled spirit made from fermented molasses.

As is pointed out in the brief for defendant in error—"The remedy for fraudulently distilling alcohol from bay rum is the identical remedy for fraudulently distilling it from rye, corn, molasses or anything—it is the criminal prosecution of the alleged distiller." It is unnecessary to pursue the subject further, as it was discussed in all its aspects in the opinion delivered in the case of Newhall v. Jordan, 149 Fed. 586, which was approved and followed by the judge of the Circuit Court in the case at bar.

The judgment is affirmed.

(161 Fed. 909.)

THE BENCLIFF.

SAMUEL v. HORSLEY LINE, Limited.

(Circuit Court of Appeals, Third Circuit. May 11, 1908.)

No. 34.

1. SHIPPING—STEVEDORES' WAGES—CHARTER PARTY—CONSTRUCTION.

A charter provided that the charterer had the option of providing stevedores for discharging cargo at port of discharge, steamer paying for the same at current rate of 40 cents, and to provide cranes and winches with full necessary steam or hand power to work the same if required by the charterer, ship to load and discharge as rapidly as possible by night as well as by day when required to do so by charterer. The unloading was done by the charterer's nominees by day and night; brokers representing both the ship and the charterer. In the account rendered the brokers charged the ship 40 cents a ton for unloading and an additional bill of $210.90 for night work by the stevedores; the celerity of the discharge being such as to also entitle the charterer to $1,000 for discharge money. *Held* that, if the charterer elected to discharge both by day and night, the ship was only bound to furnish steam for the winches and pay the day discharge rate, and was not liable for extra pay to the stevedores for night work.

2. ADMIRALTY—LIBEL—AMENDMENT.

Where a libel in form ad personam was answered, defended, and decided as such, it was not error for the court to refuse to permit respondent to shift his ground of defense after decision so as to claim that an action in rem was the proper remedy.

Appeal from the District Court of the United States for the Eastern District of Pennsylvania.

Digitized by Google

Henry Flanders, for appellant.

Convers & Kirlin, Henry R. Edmunds, and Charles R. Hickox, for appellee.

Before DALLAS, GRAY, and BUFFINGTON, Circuit Judges.

BUFFINGTON, Circuit Judge. This was a libel in personam filed by the owners of the steamship Bencliff, the appellee, to recover back from Samuel, the appellant, a bill for stevedore wages which the Bencliff had paid him under protest. The parties entered into a charter party, whereby the Bencliff was to proceed to Bilbao, Spain, and there load for Samuel a cargo of ore for delivery at any one of four United States ports he might specify. The charter provided:

"Charterer has the option of providing stevedores for discharging the cargo at port of discharge, steamer paying for the same at the current rate of * * * 40 cents, if discharged at * * * Perth Amboy * * * steamer to provide cranes and winches with full necessary steam or hand power to work same both in loading and discharging if required by charterer. * * * Ship is to load and discharge as rapidly as possible (if required) by night as well as by day, when required to do so by charterer. * * * The captain to apply to and employ charterer's nominees at * * * port of discharge."

On arrival at Perth Amboy, the selected port of discharge, the unloading was done by Pim, Forwood & Kellock, the charterer's nominees, by day and night. In an account rendered, the brokers charged the ship the current rate of 40 cents per ton stipulated for in the charter and an additional bill of $210.90 for night work by the stevedores. The celerity of discharge was such that Samuel was allowed about $1,000 for discharge money. The captain of the Bencliff paid the $210.90, and on his libel to recover the same the court below entered a decree in his favor. From such decree Samuel appealed.

After careful examination we find no reason to differ from the conclusion reached by that court. While it is true that, as provided by the charter, both charterer and vessel had the same brokers, yet under the proofs we are satisfied that they acted as Samuel's agent in discharging this cargo. The charter, which was of Samuel's own draft, gave him the option to discharge and fixed the price the ship should in such case allow him at 40 cents per ton. This rate per ton was in no way different than if a lump sum had been named. Whether Samuel discharged by day or by night, what he paid stevedores, and whether his bargain with them was for a lump sum or per ton, was no concern of the ship. The mode of discharge, if Samuel exercised his option, was for him to determine. If he chose to discharge by night, he could require the ship to permit such night discharge and furnish steam for the winches. If he incurred greater expense by night work, he could recoup his expenses by the discharge money he thereby earned. The option to discharge being manifestly inserted by Samuel for his own benefit, and the discharge having been so conducted as to inure to his gain, the brokers who directed the work are presumed to have acted therein as his agents. The Turgot, 11 Pro. Div. 21.

The Bencliff's captain testifies he did not authorize the employment of the stevedores at night, and the brokers' clerk says that:

Digitized by Google

"Samuel instructed us to require the ship to discharge at night as well as by day and instructed us to deduct the extra charge for stevedores' night work from the freight."

Moreover, the account rendered by the brokers indicates it was for disbursements made by them as Samuel's agents. As stated, the ship, if required, was bound to provide winch facilities, but the account shows the stevedore firm of Brady & Gioe, who furnished the night work, also furnished winchmen, and for them the ship was charged in the account stated. Now, if this account was one rendered by the ship, through its broker, against the charterer, a charge for a winchman, which the ship was bound to furnish, would not have entered therein. The fact that such charge is in the account shows that Samuel, and not the ship, hired and paid the winchman, and in the account rendered by his broker against the ship he demanded and received allowance therefor from the ship. The court made no mistake in holding that the brokers in discharging the ship were acting as Samuel's agents.

Nor do we think it committed error in refusing, after its opinion was rendered, to allow the respondent to shift his ground of defense. The libel was in form ad personam. It had been answered, defended, and decided as such. If this amendment, whereby the defense was sought to be raised that an action in rem was the proper remedy, had been allowed and succeeded, all the time used and expense incurred by the libelant through the respondent's misleading course would have gone for naught. Had this been done, the power of amendment which courts of admiralty concededly have (The Charles Morgan, 115 U. S. 75, 5 Sup. Ct. 1172, 29 L. Ed. 316) would have been misapplied.

The decree of the court is therefore affirmed, at appellant's cost.

Digitized by Google

(161 Fed. 657.)

CHICAGO GREAT WESTERN RY. CO. v. McDONOUGH.

(Circuit Court of Appeals, Eighth Circuit. April 27, 1908.)

No. 2,405.

1. APPEAL AND ERROR—PRACTICE—ASSIGNMENTS OF ERROR.

The practice of filing interminable assignments of error tends to defeat the purpose of the rule requiring such assignments, and is not to be approved.

2. TRIAL—CHARGE TO JURY—TO BE CONSIDERED AS A WHOLE RATHER THAN IN FRAGMENTS.

In examining the charge, for the purpose of ascertaining its correctness in point of law, the whole scope and bearing of it must be taken together. It is wholly inadmissible to take up single or detached passages, and to decide upon them without attending to the context, or without incorporating such qualifications and explanations as naturally flow from the language of other parts.

[Ed. Note.—For cases in point, see Cent. Dig. vol. 46, Trial, §§ 703–717.]

3. SAME—CHARGE TO JURY—GENERAL EXCEPTION UNAVAILING.

A general exception to a considerable portion of the charge cannot be regarded as presenting a specific objection to a lesser portion, which in fairness to the trial court should have been specially called to its attention, in order that the appropriate correction might be made.

[Ed. Note.—For cases in point, see Cent. Dig. vol. 46, Trial, § 689.]

4. SAME—RELATIVE WEIGHT OF AFFIRMATIVE AND NEGATIVE TESTIMONY—INSTRUCTION.

The rule that affirmative testimony is to be preferred to negative is not absolute, and whether or not in any particular case it shall be called to the attention of the jury is so largely in the discretion of the trial judge that the refusal to do so is not ordinarily reversible error.

5. MASTER AND SERVANT—ASSUMPTION OF RISK—DEFECTIVE MACHINERY—SERVANT NOT REQUIRED TO EXERCISE CARE TO DISCOVER DANGERS.

In determining whether a servant assumed the risk of injury incident to the use of a boiler negligently permitted by the master to become unfit and unsafe for use, the true test is, not whether the servant exercised care to discover dangers, but whether they were known to him, or were so patent as to be readily observable by him.

[Ed. Note.—For cases in point, see Cent. Dig. vol. 34, Master and Servant, §§ 574–600.

Assumption of risk incident to employment, see note to Chesapeake & O. R. Co. v. Hennessey, 38 C. C. A. 314.]

6. APPEAL AND ERROR—EXPERT EVIDENCE—QUALIFICATIONS OF WITNESS.

Whether or not a witness tendered as an expert possesses the requisite qualifications rests largely in the discretion of the trial court, and its decision thereon ought not to be disturbed unless it can be said that it was clearly erroneous.

[Ed. Note.—For cases in point, see Cent. Dig. vol. 3, Appeal and Error, § 3852.]

7. EVIDENCE—EXPERT EVIDENCE—HYPOTHETICAL QUESTIONS.

Hypothetical questions propounded to an expert witness are not objectionable merely because the evidence tending to establish the facts assumed therein is contradicted.

[Ed. Note.—For cases in point, see Cent. Dig. vol. 20, Evidence, §§ 2368–2375.]

8. NEGLIGENCE—STANDARD OF REASONABLE CARE—PRACTICE OF OTHERS—EVIDENCE—INSTRUCTION.

The controlling standard or test of reasonable or ordinary care is what a reasonably prudent person would ordinarily have done in the like cir-

Digitized by Google

cumstances, rather than the prevailing practice of others engaged in the same business. The practice of others, even though not a general or prevailing one is some evidence of what could have been done, and so has a material bearing upon whether the requisite care was exercised in what was actually done; and an instruction which treats what a reasonably prudent person would ordinarily have done in the like circumstances as the controlling standard or test of reasonable or ordinary care, and also treats the prevailing practice of others engaged in the same business as evidence only of that standard, and directs that such practice be considered with all the other evidence bearing upon the subject in fixing upon that standard, is not objectionable as permitting the jury to find that the conduct in question was negligent, even though it conformed to the prevailing practice of others, because that practice was not in itself the legal standard, but, as indicated in the instruction, was evidence only thereof.

[Ed. Note.—For cases in point, see Cent. Dig. vol. 37, Negligence, §§ 6, 371–377.]

9. STEAM—INJURIES FROM PRODUCTION OR USE—EVIDENCE OF OTHER SIMILAR ACCIDENTS.

In an action for injuries sustained through a boiler explosion, where the gravamen of the charge was that the defendant had negligently failed to exercise reasonable care in maintaining the boiler in a reasonably safe condition, evidence of recurring explosions, not otherwise explained, occurring in the course of its prior use, when the conditions were substantially the same, was admissible as bearing upon its tendency to become impaired by the particular use to which it was subjected, the defendant's knowledge of that tendency, and the precautions which, in the exercise of reasonable or ordinary care, should have been taken thereafter in inspecting and testing it to determine whether it was in reasonably safe condition for use; but such evidence was not admissible for any other purpose.

10. SAME—EVIDENCE OF CONDITIONS AFTER ACCIDENT.

Evidence of the condition, shortly after an accident, of the instrumentality which caused it, is admissible as bearing upon its condition at the time of the accident, or just prior thereto, when it appears that there has been no intervening change.

11. TRIAL—PRACTICE—MOTION TO STRIKE OUT EVIDENCE SOME OF WHICH IS UNOBJECTIONABLE.

Upon a motion to strike out all evidence relating to a specified subject, some of which is unobjectionable, the court, while at liberty to select or separate what is objectionable from what is unobjectionable, and to strike out the former, is not obliged to do so, but may respond to the motion in the terms in which it is made.

[Ed. Note.—For cases in point, see Cent. Dig. vol. 46, Trial, § 248.]

(Syllabus by the Court.)

In Error to the Circuit Court of the United States for the Northern District of Iowa.

Thomas D. Healy (A. G. Briggs, John L. Erdall, M. F. Healy, and Robert Healy, on the brief), for plaintiff in error.

Sylvester Flynn and Robert M. Wright (J. W. Henneberry, on the brief), for defendant in error.

Before VAN DEVANTER and ADAMS, Circuit Judges, and RINER, District Judge.

VAN DEVANTER, Circuit Judge. This case arose out of the explosion of a stationary boiler in the car shops of the Chicago Great Western Railway Company at Oelwein, Iowa, whereby severe and

Digitized by Google

permanent personal injuries were inflicted upon John A. McDonough, the fireman who was attending the boiler at the time. In the Circuit Court he obtained a verdict and judgment against the railway company, and it now insists that error prejudicial to it was committed in the progress of the trial.

There was nothing very unusual about the case as it was presented in the Circuit Court, as respects either the volume of evidence produced or the number of questions of law arising for decision, and yet more than 60 assignments of error are made and seemingly relied upon. All of these have been attentively considered, but we feel constrained to repeat the admonition given in Michigan Home Colony Co. v. Tabor, 72 C. C. A. 480, 141 Fed. 332, that:

> "The practice of filing such a large number of assignments cannot be approved. It thwarts the purpose sought to be subserved by the rule requiring any assignments. It points to nothing. It leaves opposing counsel and the court as much in the dark concerning what is relied on as if no assignments were filed."

And we also repeat the observation made in Shepard v. United States, 87 C. C. A. 486, 494, 160 Fed. 584, 592, that, generally speaking:

> "Such interminable assignments, instead of impressing the court with the thought of an imperfect trial, rather cast discredit upon the worth of any of them."

Of the issues presented by the pleadings it is enough to say that the petition charged that the defendant failed to exercise reasonable care in inspecting the boiler and in otherwise maintaining it in a reasonably safe condition for use, that its water tubes or flues were thereby permitted to become and to remain worn, burned, blistered, and weakened to a degree which made the boiler unfit and unsafe for use, and that by reason thereof the explosion occurred and the plaintiff was injured, and also to say that the answer denied the negligence charged against the defendant, and alleged that the plaintiff contributed to his injuries by his own negligence, and that they resulted from an assumed risk. The plea of contributory negligence was withdrawn from the jury, with the assent of the defendant, because not sustained by any evidence; so it need not be further noticed.

At the close of the evidence the court declined to direct a verdict for the defendant, and error is assigned thereon; but as a careful reading of the evidence set forth in the bill of exceptions satisfies us that the jury reasonably could have found therefrom that the defendant was negligent substantially as charged, that the plaintiff did not assume the extraordinary risks arising out of such negligence (see Chicago, Milwaukee & St. Paul Railway Co. v. Donovan, 87 C. C. A. 600, 160 Fed. 826), and that it was the proximate cause of his injuries, we think the ruling was right.

Several assignments call in question the refusal to give various instructions, and the giving of others, defining the issues presented by the pleadings, the elements of a right of recovery on the part of the plaintiff, the measure of care which the defendant was required to exercise for the plaintiff's protection, the burden of proof, the probative force of the accident itself, and what might rightly be

Digitized by Google

considered in determining the weight to be given to the testimony of the several witnesses. None of these assignments is well grounded; nor is it necessary to take them up in detail here. All that was material and otherwise unobjectionable in the instructions refused was substantially and fairly incorporated in the charge given. It was in the main exceptionally pertinent, plain, full, and accurate. But some portions of it, if separated from the rest, would justly be regarded as objectionable. That, however, is not a fair test of their meaning, for, as was said in Magniac v. Thompson, 7 Pet. 348, 390, 8 L. Ed. 709, and Spring Co. v. Edgar, 99 U. S. 645, 659, 25 L. Ed. 487:

"In examining the charge, for the purpose of ascertaining its correctness in point of law, the whole scope and bearing of it must be taken together. It is wholly inadmissible to take up single and detached passages, and to decide upon them without attending to the context, or without incorporating such qualifications and explanations as naturally flow from the language of other parts of the charge. In short, we are to construe the whole as it must have been understood, both by the court and the jury, at the time when it was delivered."

A reading of the entire charge makes it plain that the faults in the portions covered by these assignments were inadvertent, rather than intentional, and were so fully corrected by the effect of the charge as a whole that the jury could not have been misled or confused by them. They, therefore, afford no ground for complaint. Railroad Co. v. Gladmon, 15 Wall. 401, 409, 21 L. Ed. 114; Evanston v. Gunn, 99 U. S. 660, 668, 25 L. Ed. 306; Baltimore & Potomac R. R. Co. v. Mackey, 157 U. S. 72, 86, 15 Sup. Ct. 491, 39 L. Ed. 624. Besides, if the defendant entertained any fear that the jury would be misled or confused by that which was faulty, it should, in fairness to the court, have specially called attention thereto, in order that the appropriate correction could be made. Baltimore & Potomac R. R. Co. v. Mackey, supra; Choctaw, Oklahoma & Gulf Ry. Co. v. Tennessee, 191 U. S. 326, 332, 24 Sup. Ct. 99, 48 L. Ed. 201; McDermott v. Severe, 202 U. S. 600, 610, 26 Sup. Ct. 709, 50 L. Ed. 1162. This was not done, but instead a general exception was taken to each of several considerable portions of the charge, covering matter that was unobjectionable along with that which was faulty.

Among the instructions requested was one to the effect that, if the witnesses for the defendant, who testified affirmatively to the making of certain inspections and tests of the boiler, and the witnesses for the plaintiff, whose testimony upon that question was of a negative character, were equally credible, the testimony of the former was entitled to the greater weight; and complaint is made because it was refused. The existence of the rule upon which the request was predicated and the propriety of calling it to the attention of the jury, when there is warrant therefor in the evidence, are not open to question in this jurisdiction. Stitt v. Huidekopers, 17 Wall. 384, 394, 21 L. Ed. 644; Denver & R. G. Co. v. Lorentzen, 24 C. C. A. 592, 594, 79 Fed. 291; Rhodes v. United States, 25 C. C. A. 186, 189, 79 Fed. 740. But the rule is not absolute. Chicago & N W. Ry. Co. v. Andrews, 64 C. C. A. 399, 404, 130 Fed. 65; Baltimore & O. R. Co. v. Baldwin, 75 C. C. A. 211, 144 Fed. 53. And whether or not in

Digitized by Google

any particular case it shall be called to the attention of the jury is so largely in the discretion of the trial judge that the refusal to do so is not ordinarily reversible error. Denver & R. G. R. Co. v. Lorentzen, supra; Olsen v. Oregon, etc., Co., 9 Utah, 129, 140, 33 Pac. 623. Here some of the testimony for the plaintiff, although negative in character, was so substantial that we cannot say that the refusal was error.

In furtherance of its claim that the plaintiff's injuries resulted from an assumed risk, the defendant preferred several requests for instructions bearing upon that subject, each of which was constructed upon the theory that the risks assumed by a servant include such as arise out of defective appliances or machinery negligently provided by the master, if the servant knows of the defect, or "by the exercise of ordinary care" ought to know of it. These were refused, and the jury were instructed, in effect, that, if the boiler had been negligently permitted to become unfit and unsafe for use as charged, and its condition was known to the plaintiff, or was plainly observable by him, he then, but not otherwise, assumed the risks incident to its continued use in that condition. These rulings are assigned as error; but we think the Circuit Court took the right view of the question, for the true test, in respect of risks arising out of the master's negligence, is not whether the servant exercised care to discover dangers, but whether they were known to him, or were so patent as to be readily observable by him. Texas & Pacific Ry. Co. v. Archibald, 170 U. S. 665, 671, 18 Sup. Ct. 777, 42 L. Ed. 1188; Choctaw, Oklahoma & Gulf R. R. Co. v. McDade, 191 U. S. 64, 68, 24 Sup. Ct. 24, 48 L. Ed. 96; Choctaw, Oklahoma & Gulf R. R. Co. v. Holloway, 191 U. S. 334, 337, 24 Sup. Ct. 102, 48 L. Ed. 207; Texas & Pacific Ry. Co. v. Swearingen, 196 U. S. 51, 62, 25 Sup. Ct. 164, 49 L. Ed. 382; Missouri, Kansas & Texas Ry. Co. v. Wilhoit, 87 C. C. A. 401, 160 Fed. 440; Kirkpatrick v. St. Louis & San Francisco Ry. Co., 87 C. C. A. 35, 159 Fed. 855.

It is complained that one Saddler, a witness for the plaintiff, was permitted to qualify as an expert, in respect of the tests to which boilers should be subjected, by stating that he was qualified to testify upon that subject, and was permitted to so testify when it plainly appeared that he was not qualified. The first part of the complaint has reference to the following in his testimony:

"Q. Well, is your knowledge, from reading and observation and your experience as a boiler maker, such as to enable you to determine what tests boilers should be subjected to generally? A. I think it is."

There was nothing objectionable in this. It was only preliminary or precautionary, and was not made the test of his qualification. He was also required to state the extent of his reading, observation, and experience, and it was in the light of that testimony that he was held to be qualified. The second part of the complaint has reference to the fact that, while he stated that he had had 12 years of experience in the actual construction, inspection, and testing of different types of boilers, both locomotive and stationary, he also stated that he had not come in contact with any of the same type as the one which ex-

Digitized by Google

ploded, and that his knowledge of its construction and principle of operation was confined to what was disclosed at the trial and to what he had read in a book obtained from the town library and then in the courtroom. Whether or not, in the light of these statements, and of the differences between the boiler in question and those which had come under his observation—and the record makes it plain that he accurately understood these differences—he was qualified to testify as an expert, upon the subject to which his attention was directed, was a matter which rested largely in the discretion of the trial court, and its decision thereon ought not to be disturbed, unless we can say that it was clearly erroneous. Spring Co. v. Edgar, 99 U. S. 645, 658, 25 L. Ed. 487; Montana Ry. Co. v. Warren, 137 U. S. 348, 353, 11 Sup. Ct. 96, 34 L. Ed. 681; Chateaugay Iron Co. v. Blake, 144 U. S. 476, 484, 12 Sup. Ct. 731, 36 L. Ed. 510; Gila River R. R. Co. v. Lyon, 203 U. S. 465, 475, 27 Sup. Ct. 145, 51 L. Ed. 276. We cannot so say. Indeed, a careful examination of the testimony given by the witness satisfies us that he was qualified.

As bearing upon the frequency with which, in the exercise of reasonable care, the boiler should have been cleaned and inspected, the plaintiff was permitted to give in evidence certain opinions of experts elicited by hypothetical questions in which it was assumed that in such cleaning as had actually occurred prior to the explosion it had been found that some of the tubes or flues, especially those nearest to the fire, were obstructed or choked with incrustations to such an extent as to prevent the free passage through them of the water drill and the air hammer, appliances used in cleaning them; and it is urged that this was error, because there was no proper evidence upon which to base the assumption upon which the opinions were given. The contention involves a misconception of what evidence was produced, as a brief reference to some of it will show. A witness, who had been the assistant engineer at the defendant's Oelwein shops at and prior to the time of the explosion, testified:

"Mud and scale are the obstructions that are found in the flues. This mud and scale comes from impurities deposited in the water. It is hardest in the front set, which is most directly exposed to the fire. * * * Q. Do you know whether or not there was any trouble in cleaning out any of the flues? A. Yes; I do. Q. And what was the trouble? A. There seemed to be some obstruction that prevented the water cleaner from passing freely through the tubes. Q. What tubes were these—the tubes in the front set, or the tubes in the rear set or the middle set? A. I couldn't take my oath as to what particular tubes they were—flue or flues. When the obstruction is least serious the water drill or water cleaner is used, and when this does not answer the air hammer is used. * * * A boiler can be washed out in two or three days. * * * The condition of the boiler, as to whether it is clogged, determines the length of time necessary. * * * If the water cleaner won't remove the scales, and the incrustations are too solid to be removed, then the air hammer is used."

And another witness, who was one of the defendant's boiler washers prior to the explosion, testified:

"Q. Now, what can you say as to the circulating tube; that is, the tube that runs in the form of an arc or circle, and connects the two upper drums? A. The upper circulating tubes, or the lower ones? Q. The lower ones. A. Well, it was most generally always pretty well clogged up. Q. How did

Digitized by Google

you clean that? A. With the air hammer. * * * Q. Did you leave any of those circulating tubes without cleaning them? A. No, sir. Q. When you say that they would be filled, or partly filled, you mean that they were in that condition when you began the work? A. Yes, sir."

True, there was evidence tending to contradict part of this; but that did not affect the plaintiff's right to elicit the opinions of experts upon the hypothesis of the truth of what his evidence tended to prove. Jackson v. Burnham, 20 Colo. 532, 39 Pac. 577; Louisville, etc., Co. v. Falvey, 104 Ind. 409, 413, 3 N. E. 389, 4 N. E. 908; Orient Ins. Co. v. Leonard, 57 C. C. A. 176, 120 Fed. 808.

One of the questions to which much evidence was addressed was whether or not, in the exercise of reasonable care, the boiler should have been subjected to the hydraulic test more frequently than was done. This test was applied in 1898 or 1899 when the boiler was installed, in 1901 following general repairs, and possibly again two years before the accident in question. To sustain the affirmative of the question, the plaintiff introduced the testimony of experts to the effect that, when the tubes or flues of a boiler become incrusted as before described, the fire and flame to which they are subjected in ordinary use have a tendency to burn, blister, and weaken them, and therefore to increase the occasion for inspecting and testing them; that the hydraulic test was a known and practical one, applicable alike to all types of stationary boilers, and was more efficient than other tests; that it should have been applied once in each year, and whenever there were circumstances tending to excite suspicion as to the safety of the boiler; and that such was the practice of the Chicago & Northwestern Railway Company, and possibly of some other owners of stationary boilers. The defendant excepted to the admission of the evidence of the practice of the Chicago & Northwestern Railway Company, and now contends that, while evidence of a general practice of that character among boiler owners would have been admissible, it was not permissible to show anything short of a general practice. In our opinion the evidence was properly admitted. The Chicago & Northwestern Railway Company had long owned and operated many stationary boilers in the various shops connected with its extensive railroad, several of which were in the same region as the shops of the defendant, and the fact that the practice stated was followed by that company was some evidence of what could have been done by the defendant, and so had a material bearing upon whether it exercised reasonable care in what was actually done. This is illustrated, as we think, in Washington, etc., R. R. Co. v. McDade, 135 U. S. 554, 574, 10 Sup. Ct. 1044, 34 L. Ed. 235, where, in quoting approvingly from Myers v. Hudson Iron Co., 150 Mass. 125, 138, 22 N. E. 631, 633, 15 Am. St. Rep. 176, it was said:

"The plaintiffs were allowed to show that other machinery or appliances than those used by the defendant would have been safer; for example, a strap brake, a friction V, so called, or a reversible engine. In order to aid the jury in determining whether the defendant had exercised reasonable care in providing and maintaining the machinery actually in use, it was competent to show what other kinds of machinery or appliances were used elsewhere, and might have been used in shaft No. 1. Wheeler v. Wason Manuf. Co., 135 Mass. 294, 298. It does not follow from the introduction of such evidence that

Digitized by Google

the defendant was bound to use the very safest, or newest, or any particular, machinery or appliances; but, as 'reasonable care' is a relative term, the jury might properly consider what could be done to secure safety, and the evidence was competent."

The defendant did not question that there was a general practice among owners of stationary boilers to subject them to the hydraulic test when they were installed and following general repairs; but it introduced the testimony of several witnesses to the effect that this practice did not include the application of such test at other times, and that it was not so applied in the shops of ten or more railroad and other companies with which they had been connected. Some of these witnesses, however, conceded that to have so applied it was practicable, would have disclosed any serious impairment of the resisting power of the boiler, and would not have strained or injured it, if it was in reasonably safe condition. In that connection the defendant requested that the following instruction be given:

"Evidence as to custom has been received to throw light upon the question of what method, system or custom as to tests and inspection are ordinarily and usually exercised by ordinary prudent persons operating steam boilers. You are told that the standard of care to be applied, in order to determine whether or not defendant is negligent, cannot be measured by the custom and practice of a single employer so operating steam boilers, or made to depend upon the custom and practice of such single employer. The defendant was bound only to exercise such reasonable care and prudence as an ordinarily prudent person, operating such steam boilers in his business, would exercise under like circumstances; and if you find such care was exercised. you cannot find the defendant negligent for failure to adopt such system of inspection as a single employer has adopted, if that system was not in general use and not usually employed by ordinarily careful and prudent persons under like circumstances."

The request was refused, and the following instruction was given:

"As bearing upon this question of inspection, and the failure to inspect is one of the charges that the plaintiff makes against the defendant, you are to consider all the testimony in the case bearing upon it. There has been a great deal of it. It is your province to determine, and in doing so you are to consider all the facts and all the evidence that is shown here before you, and determine whether or not the defendant has exercised that degree of care in so doing that a reasonable and prudent person, under the circumstances and surroundings that existed there at Oelwein at that time, would have exercised. * * * While the conduct of the other companies is not necessarily conclusive here, because the conditions may vary somewhat from the conditions surrounding this situation at Oelwein, still it is proper for you to consider what they do in determining whether the defendant in this case has exercised that degree of care that the law required. * * * There is no definite rule which will determine the number of times that the boiler or the flues in the boiler should be cleaned, or what particular tests should be applied to them to determine whether or not they were in a reasonably safe condition. That depends upon the circumstances of the particular situation in this case, what was the character of the water that was used in those boilers, what was the amount of sediment or deposit that is left in them, and what was the character of that sediment when it was subjected to the fire; and from the character and quality of the water and the sediment that it produced, and the nature of that sediment and all the other facts shown by the evidence, you will say what would have been the frequency of the cleaning of the boiler that a reasonable and prudent person would ordinarily have done to have kept it in a reasonably safe condition for use, and whatever such a person would have done under the circumstances of the situation there at Oelwein the defendant was required to do and no more and no less. * * * If you should find that

Digitized by Google

this explosion * * * was because of some latent defect in the flue, some hidden defect there, that could not be discovered by ordinary care and reasonable diligence, why the defendant would not be liable. * * * The defendant is not required to furnish the best and safest appliances that can be obtained in the market. It is required to furnish only those that a reasonable and prudent person would furnish as applicable to the purpose for which they were to be used and the circumstances under which they were to be used."

It is said that the action of the court in this matter was error, because it permitted the jury to test the character of the defendant's conduct, in respect of the application of the hydraulic test, by the practice of the Chicago & Northwestern Railway Company alone, and because it permitted them to find that the defendant was negligent, even though they believed from the evidence that its conduct conformed to the prevailing practice among boiler owners. The contention must fail. It rests upon a misconception of the true import of the instruction given, and also confuses the controlling standard of reasonable or ordinary care with what is only evidence thereof. Instead of being permitted to test the character of the defendant's conduct by the practice of the Chicago & Northwestern Railway Company alone, the jury were required to test it by what a reasonably prudent person would ordinarily have done in the like circumstances, as disclosed by all the evidence, including that relating to the conduct or practice of other boiler owners; and the test so prescribed, rather than the usual conduct or prevailing practice of others, was the controlling standard of reasonable or ordinary care. What was done by others, even though usually done, was evidence only of that standard, and was to be considered and weighed with the other evidence, and not to the exclusion thereof. A particularly apt and comprehensive statement of the law on this subject is found in Prof. Wigmore's recent treatise on Evidence, where it is said (volume 1, § 461):

"The distinction is in itself a simple one: (1) The conduct of others evidences the tendency of the thing in question; and such conduct—e. g., in using brakes on a hill, felt shoes in a powder factory, railings around a machine, or in not using them—is receivable with other evidence showing the tendency of the thing as dangerous, defective, or the reverse. But this is only evidence. The jury may find from other evidence that the thing was in fact dangerous, defective, or the reverse, and that its maintenance was or was not negligence in spite of the above evidence. (2) Meanwhile the substantive law tells them what the standard of conduct for negligence is; and this standard is a fixed one, independent of the actual conduct of others. To take that conduct as furnishing a sufficient legal standard of negligence would be to abandon the standard set by the substantive law, and would be improper. This conduct of others, then, (1) is receivable as some evidence of the nature of the thing in question, because it indicates what is the influence of the thing on the ordinary person in that situation; but (2) it is not to be taken as fixing a legal standard for the conduct required by law. This distinction is patent enough, but it is sometimes judicially ignored. Such evidence is sometimes improperly excluded on the erroneous supposition that the mere reception of it implies that it is to serve as a legal standard of conduct. The proper method is to receive it, with an express caution that it is merely evidential, and is not to serve as a legal standard."

And such is plainly the effect of the decisions of the Supreme Court of the United States. Grand Trunk R. R. Co. v. Richardson, 91 U. S. 454, 469, 23 L. Ed. 356; Wabash Railway Co. v. McDaniels, 107

Digitized by Google

U. S. 454, 461, 2 Sup. Ct. 932, 27 L. Ed. 605; Northern Pacific R. R. Co. v. Mares, 123 U. S. 710, 719, 721, 8 Sup. Ct. 321, 31 L. Ed. 296; Texas & Pacific Ry. Co. v. Behymer, 189 U. S. 468, 470, 23 Sup. Ct. 622, 47 L. Ed. 905.

In the McDaniels Case it was said by Mr. Justice Harlan:

"If the general practice of such corporations in the appointment of servants is evidence which a jury may consider in determining whether, in the particular case, the requisite degree of care was observed, such practice cannot be taken as conclusive upon the inquiry as to the care which ought to have been exercised. A degree of care ordinarily exercised in such matters may not be due care, or reasonable care, or proper care, and therefore not ordinary care within the meaning of the law."

In the Mares Case the following instruction, given at the request of the plaintiff over the objection of the defendant, was fully approved:

"Ordinary or due care in such cases is not merely such care as other railroad companies exercise under like circumstances, for other railroad companies may be careless. Ordinary care in the selection or retention of servants in such cases implies that degree of diligence and precaution which the exigencies of the particular service reasonably require—that is, such care as, in view of the consequences that may result from negligence on the part of employés, is fairly commensurate with the perils or dangers likely to be encountered."

In the Behymer Case, where error was alleged because of a refusal to rule that the defendant's liability for injuries sustained by the plaintiff, in being thrown from a freight train of which he was brakeman by a sudden jerk thereof, "depended on whether the freight train was handled in the usual and ordinary way," it was said by Mr. Justice Holmes:

"Instead of that, the court left it to the jury to say whether the train was handled with ordinary care; that is, the care that a person of ordinary prudence would use under the same circumstances. This exception needs no discussion. The charge embodied one of the commonplaces of the law. What usually is done may be evidence of what ought to be done; but what ought to be done is fixed by a standard of reasonable prudence, whether it usually is complied with or not."

And in the recent case of Shandrew v. Chicago, Milwaukee & St. Paul Railway Co., 73 C. C. A. 430, 434, 142 Fed. 320, 324, it was said by Judge Adams, in speaking for this court:

"What other railroad companies did is not in itself a standard of care for the defendant, but is evidence only of that standard. It is evidence that the jury may consider under proper instructions in determining whether this defendant exercised ordinary care; that is, such care as other prudent persons engaged in the same business ordinarily exercised. The Supreme Court of the United States well expressed this thought in the case of Texas & Pacific Railway Co. v. Behymer. * * * From these observations it appears that the proof of what other railroads did under similar circumstances was properly treated in these instructions as evidence only of the standard of that ordinary care which the law required the defendant to observe."

Tested by the result of these decisions, the instruction given accurately stated what consideration should be given to the practices of other boiler owners, including the Chicago & Northwestern Railway Company.

Digitized by Google

The explosion in question occurred in June, 1904, and resulted from the bursting of one of the tubes or flues nearest the fire, when the pressure was only normal, or the usual working pressure. Over the defendant's objection, evidence was admitted of a similar explosion in 1900, something over a year after the boiler was installed, of two others in the fall of 1901, and of still another in the fall of 1903. The admissiblity of this evidence is one of the questions presented by the assignments of error. It was admitted as tending to show some notice to the defendant of the probable length of time that the tubes or flues could be used with reasonable safety, in the conditions surrounding their use in that boiler, and as bearing upon the precautions which, in the exercise of reasonable or ordinary care, should have been taken thereafter in inspecting and testing them to determine whether they were in reasonably safe condition to be used; and the jury were plainly instructed that it could be considered for that purpose, and none other, and particularly that it could not be regarded as evidence of any negligence at the times of the prior explosions. Considering the restricted purpose for which the jury were permitted to consider it, we entertain no doubt that it was properly admitted. What is reasonable or ordinary care in the inspection and testing of a boiler depends in part upon its tendency to become impaired by use, because to be reasonable or ordinary the care must be proportionate to the danger; and as the tendency to impairment results from natural laws, and usually is continuous, the observed exhibitions thereof in the past are generally indicative of what may be expected in the future. In consequence, due regard for them must be had in what is done to make the future use reasonably safe, and when the reasonableness of what is so done becomes the subject of inquiry they have a material bearing thereon. Recurring explosions, such as were shown at the trial, when there is no other known cause for them, are indicative of a pronounced and dangerous tendency to impairment, to which the care to be exercised in future inspection and testing must be proportionate. As quite apposite, we quote from Dr. Wharton's work on Evidence (volume 1, §§ 40, 41), wherein, after a reference to the general rule which excludes evidence of other independent, though similar, acts of negligence, it is said:

"But when a party is charged with the negligent use of a specific agency, and when the case against him is that he did not use care proportionate to the danger, then the question becomes material whether he knew, or ought to have known, the extent of the danger. On such an issue as this it is relevant for the party aggrieved to put in evidence of disconnected acts, of which it was the duty of the defendant to have been cognizant, and which, if he were cognizant of them, would have advised him of the extent of the danger, and would have made it his duty to take precautions which would, if faithfully applied, have prevented the injury sued for."

An instructive and leading case upon the subject is Morse v. Minneapolis & St. Louis Ry. Co., 30 Minn. 465, 471, 16 N. W. 358, 361, where recovery was sought for injuries sustained in the derailment of an engine which was alleged to have been caused by a defective switch, and where the plaintiff was permitted, for the purpose of showing the defective character and dangerous tendency of the switch,

Digitized by Google

to prove that other engines and cars had left the track at the same point. In holding this evidence admissible for the purpose stated, it was said by the late Judge Mitchell:

"It is, of course, not competent for the purpose of showing independent acts of negligence; but we think on principle it is clearly admissible when it tends to show that the common cause of these accidents is a dangerous or unsafe thing. It would be certainly competent to prove by an expert that, at a time either before or after the accident, when the instrument claimed to have caused it was in the same condition as when the accident complained of occurred, he examined and experimented with it, and found it capable of producing like results. Hence there seems no reason for excluding ordinary experience, when confined within the same limits and for the same purpose. These effects are in the nature of experiments to show the actual condition of the instrument. Upon any issue as to the condition or safety of any work of human construction designed for practical use, evidence showing how it has served, when put to the use for which it was designed, would seem to bear directly upon the issue. It is sometimes objected that this presents new and collateral issues of which a defendant has no notice. In a certain sense every item of evidence material to the main issue introduces a new issue; that is, it calls for a reply. In no other sense does it make a new issue. Its only importance is that it bears on the main issue, and, if it does, it is competent. Evidence of similar accidents resulting from the same cause has often been held competent for the purpose referred to. Kent v. Town of Lincoln, 32 Vt. 591; Quinlan v. City of Utica, 11 Hun (N. Y.) 217; Willey v. Portsmouth, 35 N. H. 303; Chicago v. Powers, 42 Ill. 169, 89 Am. Dec. 418; Piggott v. Eastern Cos. R. Co., 3 C. B. 229; House v. Metcalf, 27 Conn. 631; Hill v. P. & R. R. Co., 55 Me. 438, 92 Am. Dec. 601; Darling v. Westmoreland, 52 N. H. 401, 13 Am. Rep. 55. But to render such evidence competent it must appear, or at least the evidence must reasonably tend to show, that the instrument or agency whose condition is in issue was in substantially the same condition at such times as it was at the time when the accident complained of occurred."

True, this view is rejected by some of the courts; but the reasoning upon which it is founded is sustained by controlling decisions of the Supreme Court of the United States, and by many other satisfactory decisions. Grand Trunk R. R. Co. v. Richardson, 91 U. S. 454, 470, 23 L. Ed. 356; District of Columbia v. Arms, 107 U. S. 519, 524, 2 Sup. Ct. 840, 27 L. Ed. 618; Vicksburg, etc., R. R. Co. v. Putnam, 118 U. S. 545, 553, 7 Sup. Ct. 1, 30 L. Ed. 257; Texas & Pacific Ry. Co. v. Watson, 190 U. S. 287, 289, 23 Sup. Ct. 681, 47 L. Ed. 1057; Chicago, etc., Co. v. Gilbert, 3 C. C. A. 264, 52 Fed. 711; Gulf, etc., Co. v. Johnson, 4 C. C. A. 447, 54 Fed. 474; Central Vermont R. R. Co. v. Soper, 8 C. C. A. 341, 353, 59 Fed. 879; Chicago, etc., Co. v. Netolicky, 14 C. C. A. 615, 622, 67 Fed. 665; Wabash Screen Door Co. v. Black, 61 C. C. A. 639, 645, 126 Fed. 721; McCarragher v. Rogers, 120 N. Y. 526, 24 N. E. 812; Findlay Brewing Co. v. Bauer, 50 Ohio St. 560, 35 N. E. 55; City of Bloomington v. Legg, 151 Ill. 9, 37 N. E. 696, 42 Am. St. Rep. 216; Frohs v. City of Dubuque, 109 Iowa, 219, 80 N. W. 341; Colorado, etc., Co. v. Rees, 21 Colo. 435, 440, 42 Pac. 42; Pacheco v. Judson Mfg. Co., 113 Cal. 541, 45 Pac. 833; Yates v. City of Covington, 119 Ky. 228, 83 S. W. 592; Myers v. Hudson Iron Co., 150 Mass. 125, 131, 138, 22 N. E. 631, 15 Am. St. Rep. 176, 1 Wigmore, Ev. § 458.

But it is urged that this evidence was not admissible, because the conditions at the times of the prior explosions were not substantially

Digitized by Google

the same as those at the time of the explosion in question. If the premise be correct, the conclusion undoubtedly follows. Is the premise correct? Primarily, it is well to observe that sameness in every detail is not necessary, but only similarity in essential conditions; that is, in such as reasonably might be supposed to affect the tendency in question. 1 Wigmore, Ev. § 442. The changes relied upon are (1) that following the later of the two explosions in 1901 the tubes nearest the fire were all taken out and replaced by new ones, and (2) that in 1902 the source from which water was secured for the boiler was changed, and thereafter the water was subjected to filtration before it entered the boiler. As both changes were effected before the explosion in the fall of 1903, it is plain that they produced no dissimilarity between the conditions at the time of that explosion and those at the time of the succeeding one in 1904, when the plaintiff was injured. All the explosions occurred in the tubes nearest the fire, where, according to the undisputed evidence, the tendency to impairment was the greatest. These had been in use something over a year at the time of the explosion in 1900, and all but a few of them had been in use something over two years at the time of the explosions in 1901. Obviously, the removal of the old tubes and the substitution of new ones, following these explosions, produced for a time a substantial change in the conditions, because it eliminated the prior use to which the old tubes had been subjected. But it had ceased to be operative, in any substantial sense, at the time of the explosions in 1903 and 1904; for the new tubes, which were like the old ones, had then been subjected to the same kind and amount of use as had the old ones at the times of the earlier explosions.

We pass, therefore, to the other change. The only way in which it could have materially altered the conditions was in preventing or lessening the incrustation of the tubes. But the evidence, including that for the defendant, tended strongly to establish that it did not have any appreciable effect in that regard; that thereafter, as before, the incrustations in the tubes nearest the fire were not infrequently "like granite or crockery—that is, harder, you might say, than iron or steel"—and as much as one-sixteenth of an inch in thickness, which was one-half the thickness of the tubes; and that the filtration, while removing some of the sediment from the water, had but little effect upon other impurities, which, under the influence of the great heat to which the water was subjected, attached themselves to the tubes in the form of these hard and particularly objectionable incrustations. We cannot say, therefore, that this change was sufficiently substantial to render the evidence of the earlier explosions inadmissible; and we more readily give effect to this conclusion because the jury were instructed that, in determining whether the defendant had exercised reasonable care in cleaning and testing the boiler, they should consider, in connection with the other evidence bearing thereon, the character of the water that was used, and the amount and nature of the sediment or deposit that it left in the tubes when subjected to the fire, which, of course, required them to consider any improvement in that respect that may have resulted from changing the source from which the water was secured and subjecting it to filtration.

Digitized by Google

Finally, it is complained that error was committed in admitting, and afterwards in refusing to strike out, evidence showing the removal and condition of 11 of the tubes or flues immediately following the explosion in question. As respects the evidence of their removal, it is enough to say that it was not offered or admitted as an admission or confession that the tubes were defective, or that the defendant had been in any manner negligent, but only as a mere incident in showing their condition; some of the witnesses having examined them as they were being removed, and others after their removal was accomplished. Besides, the fact of their removal was shown by the defendant in the same incidental way. As respects the rulings in respect of the evidence of their condition, the facts are these: When plaintiff's counsel indicated his purpose to offer such evidence, the court interposed:

"Well, I understand it is for the purpose of showing the condition of the flues at the time of the accident."

And plaintiff's counsel replied:

"Yes, sir; it is for the purpose of showing the condition of the flues, so far as we can, at the time of the accident."

Plaintiff's counsel then inquired of a witness, who was present when the flues were removed:

"Will you describe the condition of the flues that were taken out? I allude now to the condition when they were taken out."

Whereupon defendant's counsel objected that this was "seeking to elicit evidence to establish negligence by a condition found subsequent to the explosion." The objection was overruled, the defendant excepting, and, without any further objection, testimony was elicited from that witness and others tending to show that some of the flues were slightly warped, that the one which burst and caused the explosion was reduced in thickness at the place of the rent or rupture, and that it and others were pitted, blistered, and burned. Subsequently the defendant requested that all of this evidence be stricken out, because it related to "a condition subsequent to the accident," and because the disturbance wrought by the explosion made it of no value for the purpose for which it was offered. The request was denied, the defendant excepting, and, in its charge to the jury, the court referred to this evidence, saying that it—

"was admitted for the purpose of more accurately and clearly showing you the actual condition of those flues at the time of that accident, and for no other purpose, and you will consider it for that alone, and not as evidence of neglect on the part of the defendant company. There is also testimony which tends to show that the explosion itself might have affected or changed the actual condition of the flues or the boiler at the time of the explosion. You have heard that testimony, and, like the other testimony in the case, it is for you to say to what extent those flues were injured by the effect of the explosion itself. And from all the testimony you will say what was the actual condition of those flues at the time just prior to the explosion which resulted in the injury of Mr. McDonough. The testimony was admitted for that purpose, and will be considered for that purpose alone."

It is not here seriously insisted that the evidence that the flue which burst and others were pitted, blistered, and burned was inadmissible,

Digitized by Google

and, if it were, we would have to hold otherwise. It was made perfectly plain that the explosion could not have wrought any change in that respect, and therefore that, if that was their condition immediately following the explosion, it must also have been their condition just prior to the explosion. There was, however, substantial evidence which tended quite persuasively to show that the reduced thickness of the flue which burst and the warping of others could as well be attributed to the force of the explosion as to anything which had occurred in their prior use; and it may be that it would not have been error to have stricken out the evidence of their being in that condition. 6 Thompson, Neg. § 7870. But in our opinion the defendant is not in a position to complain that this evidence was admitted or that it was not stricken out. The objection interposed when the after condition of the flues was about to be shown was not tenable, because it was nothing less than an assertion that no evidence of that character was admissible for the purpose indicated, which was not the case, as the authorities amply show. Droney v. Doherty, 186 Mass. 205, 71 N. E. 547; Creamery Package Mfg. Co. v. Hotsenpiller, 159 Ind. 99, 64 N. E. 600; 1 Wigmore, Ev. § 437. And the motion to strike out was in terms directed against "all evidence" of that character, and so covered that relating to the pitted, blistered, and burned condition of some of the flues, as well as that which it is now said was objectionable. To have sustained the motion in the terms in which it was made would undoubtedly have been error, and yet the court was not bound to do more than to respond to it as made. As has been well said:

"Courts of justice are not obliged to modify the propositions submitted by counsel, so as to make them fit the case. If they do not fit, that is enough to authorize their rejection." Elliott v. Piersol, 1 Pet. (U. S.) 328, 338, 7 L. Ed. 164.

But this does not mean that the court is not at liberty, on such a motion, to select or separate objectionable evidence from what is unobjectionable, and to strike out the former, but only that it is not obliged to do so. Elliott v. Piersol, supra; Moore v. Bank of Metropolis, 13 Pet. (U. S.) 302, 310, 10 L. Ed. 172; United States v. McMasters, 4 Wall. (U. S.) 680, 682, 18 L. Ed. 311; Smith v. Brown, 8 Kan. 609, 619; Louisville, etc., Co. v. Falvey, 104 Ind. 409, 416, 3 N. E. 389, 392, 4 N. E. 908; Jones v. State, 118 Ind. 39, 20 N. E. 634; Davis v. Hopkins, 18 Colo. 155, 32 Pac. 70. It follows that the instruction relating to the evidence of the after condition of the flues put that matter before the jury in as favorable a light for the defendant as, in the circumstances, it was entitled to demand.

In what has been said it has been assumed, for present purposes only, that the evidence of the reduced thickness of the flue which burst and of the slight warping of others might well have been stricken out; but we would not be understood as holding that, if that had been properly requested, the refusal to do so would have been reversible error. See Holmes v. Goldsmith, 147 U. S. 150, 164, 13 Sup. Ct. 288, 37 L. Ed. 118. That question is not here, and requires no further notice.

We find no error in the record, and the judgment is affirmed.

Digitized by Google

(161 Fed. 672.)

MORRIS v. UNITED STATES.*

(Circuit Court of Appeals, Eighth Circuit. March 17, 1908.)

No. 2,677.

1. CRIMINAL LAW—NATURE OF OFFENSE—FELONY OR MISDEMEANOR.

There are no crimes or offenses cognizable in the federal courts outside of maritime or international law or treaties except such as are created and defined by act of Congress, and where the statute designates and denounces a crime of the character or class which at common law was regarded as a felony, without naming it as a misdemeanor, it is to be classed as a felony, but not if it is termed by the statute a misdemeanor. If the statute adopts a state statute as to an offense made a felony by the state law, it may be so treated by the federal courts.

[Ed. Note.—For cases in point, see Cent. Dig. vol. 14, Criminal Law, §§ 29-31.]

2. INDICTMENT AND INFORMATION—JOINDER OF OFFENSES—OFFENSES OF SAME CLASS.

The offenses created by the Oleomargarine Act Aug. 2, 1886, c. 840, 24 Stat. 209 (U. S. Comp. St. 1901, p. 2228), were unknown to the common law, and are all merely statutory misdemeanors and of the same class regardless of the various penalties prescribed, and charges under its different provisions may be joined in the same indictment under Rev. St. § 1024 (U. S. Comp. St. 1901, p. 720).

[Ed. Note.—For cases in point, see Cent. Dig. vol. 27, Indictment and Information, §§ 419, 420.]

3. JURY—COMPETENCY OF JURORS IN FEDERAL COURTS—PRIOR SERVICE.

Rev. St. § 812 (U. S. Comp. St. 1901, p. 627), which provides that "no person shall be summoned as a juror in any Circuit or District Court more than once in two years and it shall be sufficient cause of challenge to any juror called to be sworn in any case that he has been summoned and attended said court as juror at any term of said court held within two years prior to the time of such challenge" as modified by Act June 30, 1879, c. 52, § 2, 21 Stat. 43 (U. S. Comp. St. 1901, p. 624), by reducing the time to one year, prescribes the rule of procedure in the federal courts to the exclusion of any state statute or rule, and under such provisions it is not ground of challenge to a juror that he has served as a juror within one year unless it was in the same court.

4. INTERNAL REVENUE—PROSECUTION FOR CARRYING ON BUSINESS WITHOUT PAYING SPECIAL TAX—ISSUES AND BURDEN OF PROOF.

In a prosecution for carrying on a business without having paid the internal revenue tax required by statute it is sufficient for the government to prove that defendant carried on the business at a certain time and place and payment of the tax is a matter of defense, which if relied on must be proved by defendant.

[Ed. Note.—For cases in point, see Cent. Dig. vol. 29, Internal Revenue, § 149.]

5. INDICTMENT AND INFORMATION—MODE OF MAKING OBJECTIONS—OBJECTING TO INTRODUCTION OF EVIDENCE.

The practice of attacking the sufficiency of an indictment by objecting to the introduction of any evidence thereunder is not recognized in the federal courts.

6. CRIMINAL LAW—WRIT OF ERROR—FORMAL DEFECTS—CURATIVE STATUTE.

The objection that an indictment in a federal court fails to show on its face that the grand jury which returned it came from the district in which it was found is one to a matter of form only and under Rev.

---

*Rehearing granted as to the sufficiency of the eighth count of the indictment.

Digitized by Google

St. § 1025 (U. S. Comp. St. 1901, p. 720), does not render the indictment insufficient, at least when first raised in an appellate court.

[Ed. Note.—For cases in point, see Cent. Dig. vol. 15, Criminal Law, § 2627.]

7. INTERNAL REVENUE—INDICTMENT FOR VIOLATION OF OLEOMARGARINE ACT—SUFFICIENCY—"MANUFACTURER."

An indictment for carrying on the business of a manufacturer of oleomargarine without having paid the special tax therefor, based on the amendment to section 3 of the oleomargarine act added by Act May 9, 1902, c. 784, § 2, 32 Stat. 194 (U. S. Comp. St. Supp. 1907, p. 636), which provides that any person that sells, vends, or furnishes oleomargarine for the use and consumption of others "except to his own family table without compensation," and who shall color the same to resemble butter, shall be deemed a manufacturer, need not negative such exception which is in fact mere surplusage, since it does not exempt from the operation of the statute anything which would otherwise be within it.

[Ed. Note.—For other definitions, see Words and Phrases, vol. 5, pp. 4346, 4358.]

8. SAME.

An indictment in the language of section 4 of the oleomargarine act of August 2, 1886, c. 840, 24 Stat. 209 (U. S. Comp. St. 1901, p. 2229), charging that the defendant at a certain time and place did unlawfully "carry on the business of a manufacturer of oleomargarine without having first then and there paid the special tax therefor as required by law," states all the elements of the offense and is sufficiently specific in the absence of a motion for a bill of particulars showing whether the defendant is charged with being a manufacturer in the ordinary sense under the original act or as defined in the amendment of May 9, 1902, c. 784, § 2, 32 Stat. 194 (U. S. Comp. St. Supp. 1907, p. 636).

9. SAME.

An indictment for a violation of section 6 of the oleomargarine act of August 2, 1886, c. 840, 24 Stat. 210 (U. S. Comp. St. 1901, p. 2230), by packing oleomargarine in packages which had previously been used for that purpose considered, and *held* sufficient.

10. SAME.

An indictment for using for packing oleomargarine stamped packages which had previously contained oleomargarine in violation of section 13 of the oleomargarine act of August 2, 1886, c. 840, 24 Stat. 211 (U. S. Comp. St. 1901, p. 2232), which prohibits such use, and provides that "any person who fraudulently gives away or accepts from another, or who sells, buys or uses for packing oleomargarine any such stamped package," shall be guilty of a criminal offense is good, at least after verdict, although it does not charge that such packages were "fraudulently" used.

Sanborn, Circuit Judge, dissenting.

In Error to the District Court of the United States for the Eastern District of Missouri.

Shepard Barclay (Thomas T. Fauntleroy, on the brief), for plaintiff in error.

Jesse W. Barrett, Special Asst. U. S. Atty.

Before SANBORN and ADAMS, Circuit Judges, and PHILIPS, District Judge.

PHILIPS, District Judge. The plaintiff in error (hereinafter, for convenience, designated the defendant) was indicted and convicted on various counts for the violation of certain provisions of the stat-

Digitized by Google

ute respecting the manufacture and sale of oleomargarine. Act Aug. 2, 1886, c. 840, 24 Stat. 209; volume 2, p. 2228, c. 7b, U. S. Comp. St. 1901. Some of the counts on which convictions were had were predicated of the amendment to section 3 of said act. 32 Stat. 194, approved May 9, 1902, c. 784, § 2 (U. S. Comp. St. Supp. 1907, p. 636). The eighth count on which conviction was had was under section 6 of said chapter 7b. The tenth count on which the defendant was convicted was based upon another provision of the statute, hereinafter adverted to. The penalty imposed by the statute for the offenses embraced within the first five counts of the petition on which convictions were had is a fine, without imprisonment. The penalty imposed by section 6 of the act, on which the eighth count was founded, is a fine of not more than $1,000, and imprisonment not more than two years. Under the tenth count of the indictment the statute authorizes a fine of not more than $100 and imprisonment not more than one year. On each of the said first five counts, the court imposed a fine of $1,000. On the eighth count, the sentence was a fine of $1,000 and imprisonment in the United States penitentiary at Ft. Leavenworth for two years. On the tenth count, the sentence was a fine of $100 and 24 hours in jail.

At the opening of the trial, counsel for the defendant moved that the district attorney be required to elect upon which of the counts he would prosecute. The denial of this motion is assigned for error. The contention made is that the several offenses are so incongruous in law as not to admit of their joinder in the same indictment under the provisions of section 1024, Rev. St. (U. S. Comp. St. 1901, p. 720). The assumption of counsel is that all the counts, save the eighth, are for misdemeanors, while the eighth is a felony. If, however, all the offenses charged constitute only misdemeanors under the federal statute, they would be "of the same class of crimes or offenses," being violations of the same statute "defining butter,, also imposing a tax upon and regulating the manufacture, sale, etc., of oleomargarine"; and as such, it was permissible to join the several offenses in one indictment, setting forth the different acts in separate counts. Pointer v. U. S., 151 U. S. 396, 400, 14 Sup. Ct. 410, 411, 38 L. Ed. 208. The only limitation, which is addressed largely to the discretion of the trial court, upon such joinder of several offenses in one indictment is that their multiplication ought not to be so great as to tend "to confound the accused in his defense, or to prejudice him as to his challenges in the matter of being held out to be habitually criminal to the distraction of the attention of jury." In such case, the court might confine the indictment to so many of the offenses as would prevent such prejudice. McElroy v. U. S., 164 U. S. 80, 17 Sup. Ct. 31, 41 L. Ed. 355.

It is conceded that, inasmuch as the defendant could be sentenced under the eighth count to imprisonment in the penitentiary, the offense is an infamous crime, within the purview of the fifth amendment to the federal Constitution. Mackin et al. v. United States, 117 U. S. 348, 6 Sup. Ct. 777, 29 L. Ed. 909. It does not follow, however, that such result designates the offense a felony so as to take it out of "the same class of crimes or offenses" as those embraced in the

Digitized by Google

other counts of the indictment, which are admittedly mere misdemeanors.

Without reviewing the authorities, as this would be but a work of supererogation, the following summary may be regarded as the settled law within the federal jurisdiction: (1) There are no crimes or offenses cognizable in the federal courts, outside of maritime or international law or treaties, except such as are created and defined by acts of Congress; (2) where the statute designates and denounces a crime of the character or class which at common law was regarded as a felony without naming it as a misdemeanor, such as burglary, robbery, et id omne genus, which at common law had a well-defined meaning as a felony, these are classed as felonies; (3) although the offense proscribed by the state may at common law come within the category of a felony, yet if termed by the statute a misdemeanor, it is not to be regarded in federal procedure as a felony; (4) when Congress adopts a state statute or law as to an offense made a felony by the state law, it may be so treated by the federal court. Ex parte Wilson, 114 U. S. 417, 5 Sup. Ct. 935, 29 L. Ed. 89; Bannon et al. v. United States, 156 U. S. 464, 15 Sup. Ct. 467, 39 L. Ed. 494; Reagan v. United States, 157 U. S. 301, 15 Sup. Ct. 610, 39 L. Ed. 709; Considine v. United States, 112 Fed. 342, 50 C. C. A. 272; Hume v. United States, 118 Fed. 689, 698, 55 C. C. A. 407. Offenses proscribed under the oleomargarine act were unknown to the common law. They are solely the creatures of the act of Congress. As they are not designated as felonies by the statute, they are only statutory misdemeanors, entitling the defendant to only three peremptory challenges to the trial jury. Considine v. United States, supra. This assignment of error, therefore, must be overruled.

Error is assigned to the action of the court in overruling the defendant's challenge to certain jurors. The regular panel having been exhausted, the following occurred in making inquiries of the talesmen: Defendant's counsel asked, "Have any of you served upon a jury within the past year?" to which some of the jurors replied in the affirmative; who were then challenged for cause, "on the ground that they had served as jurors within the past year." The challenge was overruled, the court adding:

> "Let the record show that these jurors have not served within twelve months. They cannot serve more than once in twelve months in any case, except during the present term of this court, they being members of the jury at this term."

The meaning of this was that the jurors had been in attendance at that term of court, and had, perhaps, been discharged, which did not disqualify them on the ground that they had been jurors within the 12 months preceding, within the meaning of the statute. Thereupon, counsel for the defendant said:

> "Our contention is that they are not entitled to serve under the ruling of the Missouri Supreme Court."

From which it is manifest counsel conceived that the provisions of the state statute respecting the qualifications of jurors obtained in this respect in the federal courts. In other words, if a juror had served on a

Digitized by Google

state jury within the year next preceding, he would be disqualified from serving within that year on a jury in the federal court. This is a misconception of the law. It is the well-recognized rule that where Congress has spoken touching a matter of procedure or regulation within its constitutional competence, it is exclusive of any state statute or regulation of the subject-matter. Conn. Mut. Life Ins. Co. v. Schaefer, 94 U. S. 458, 24 L. Ed. 251; White v. Wansey, 116 Fed. 347, 53 C. C. A. 634; Travis v. Ins. Co., 104 Fed. 486, 43 C. C. A. 653. This rule has been held to apply to the matter of impaneling jurors. Walker et al. v. Collins et al., 50 Fed. 737, 1 C. C. A. 642; Pointer v. U. S., 151 U. S. 397, 14 Sup. Ct. 410, 38 L. Ed. 208; Ex parte Fisk, 113 U. S. 713, 5 Sup. Ct. 724, 28 L. Ed. 1117. Congress has spoken on this subject. Section 812, vol. 1, Comp. St. 1901, p. 627, declares that:

"No person shall be summoned as a juror in any Circuit or District Court more than once in two years, and it shall be sufficient cause of challenge to any juror called to be sworn in any case that he has been summoned and attended said court as juror at any term of said court held within two years prior to the time of such challenge."

By the amendment of June 30, 1879, c. 52, § 2, 21 Stat. 43 (U. S. Comp. St. 1901, p. 624), the two years' provision was reduced to one year. Clearly enough, the statute has exclusive reference to the like service performed in the United States court, for it distinctly says the qualification shall extend "to any juror called to be sworn in any cause that he has been summoned and attended said court." Evidently, the term "said court" refers back to the Circuit or District Court of the United States where the jurors are called to serve. He who complains of an erroneous ruling must make that error appear affirmatively. The question asked and answered should have been followed up with the further inquiry as to whether or not the juror had been summoned and attended within the year preceding in that court. This objection, therefore, was rightly overruled.

Complaint is made of the action of the court in ruling that it devolved upon the defendant to show that he had paid the tax as a manufacturer of oleomargarine, if he so claimed. The government introduced the witness Buehrman, the deputy collector of revenue, at St. Louis, who testified that the defendant had made application for what is termed a license as a retailer of oleomargarine at certain places covered by the indictment. To this evidence, counsel for the defendant first objected on the ground that "there is no statement on which one of the different sorts of license the party engaged in that business was referred to." After some further colloquy between counsel and the court as to what he desired to argue, counsel said:

"He (the witness) is asked whether he ever made an application, and the question of the sort of application is what is concerned in this indictment. Our point is, that there is no allegation in this indictment that brings him within the terms of this section."

Thereupon the district attorney said:

"I have no intention at this time to ask Mr. Buehrman anything except to identify the stand at No. 117 Union Market and whether this man took it

Digitized by Google

out, to show his connection with the premises as a retail dealer and not as a manufacturer."

Thereupon, the applications were shown to counsel for the defendant who objected thereto, "because they did not relate to the matter charged in the indictment. It applies to a retail dealer." Thereat, the court said:

"It will be admitted for the purpose that it will tend to establish that he was engaged in business at that place. It is not for the purpose of proving that he is guilty of any offense. It will be admitted for that purpose only."

Afterward, before the conclusion of the evidence on the part of the government, this witness was recalled by the district attorney. In answer to the inquiry of the court as to what he wished to prove by the witness now, the district attorney answered, "just to prove the fact, which of course is the defense which will be set up, that this man never had a license." The court said that the government need not prove that. Counsel for defendant said that what he wanted the witness for was to have him produce the papers which he had formerly as a witness. The court said, "Whenever you want to make him your witness, you can do so;" upon counsel answering that he did not care to do that, the court said, "If you want to recall him to cross-examine him on what he testified to yesterday you may do so;" and that in view of the evidence which had been brought out, he would instruct the jury that they need not regard the application made. Thereat, counsel for the defendant said that he excepted, because he was entitled to show that the defendant was a retail dealer. The court said, "You may prove that by him." This colloquy discloses that the court distinctly stated to defendant's counsel that he might cross-examine the witness as to the issue made in chief, which counsel declined to do. He now complains especially of the remark by the court, "You may prove that by him." The contention made is that this was an invitation by the court to have the defendant, against his wishes, go upon the witness stand. We do not think this a fair implication. It purported nothing more than this: If the defendant has paid the tax, he can show the fact, not by going upon the stand as a witness and testifying thereto, but by merely exhibiting the receipt, presumptively in his possession. If lost or destroyed, he could show the fact of its issue by the proper book in the collector's office, which was in the building where the court was sitting. It has been the universal rule in the federal courts in proceedings by indictment for failure to pay the revenue tax to the government, authorizing the carrying on of the business by the defendant, for the government to show in the first place that the defendant had engaged in the business at a certain time and place, leaving him to produce his receipt for the tax, if he have one. This rule is expressed in Greenleaf on Evidence, vol. 1, § 79, as follows:

"Where the subject-matter of the negative averment lies peculiarly within the knowledge of the other party, the averment is taken as true, unless disproved by that party. Such is the case in civil or criminal prosecutions for a penalty for doing an act which the statutes do not permit to be done by any persons, except those who are duly licensed therefor; as, for selling liquors, exercising a trade or profession, and the like."

Digitized by Google

Accordingly, it is the recognized rule that "Licenses are intrinsic matters of defense and must be shown by the party claiming under them." Wharton, Crim. Evidence (8th Ed.) § 332; State v. Lipscomb, 52 Mo. 33; State v. Hathaway, 115 Mo. 36, 21 S. W. 1081; Blackman v. Commonwealth, 124 Pa. 578, 17 Atl. 194.

The sufficiency of the allegations of the indictment is assailed in argument, especially the counts charging that the defendant carried on the business of a manufacturer of oleomargarine without having paid the required government tax. As these counts are alike, with the exception of the dates of the commission of the offense and the places where the business was conducted, it will be sufficient to present the first count which, after the caption, is as follows:

"The grand jurors of the United States, impaneled, sworn and charged at the term aforesaid of the court aforesaid, on their oath present that heretofore, to wit, between the 1st day of October, 1905, and the 1st day of November, 1906, Johnson R. Morris, at the division and district aforesaid, and within the jurisdiction of said court, did then and there unlawfully, at the premises known as No. 1117 St. Ange avenue, in the city of St. Louis, Missouri, carry on the business of a manufacturer of oleomargarine without having first then and there paid the special tax therefor as required by law, contrary to the form of the statute in such case made and provided, and against the peace and dignity of the United States."

Section 4 of the statute which defines the offense is as follows:

"That every person who carries on the business of a manufacturer of oleomargarine without having paid the special tax therefor, as required by law, shall, besides being liable to the payment of the tax, be fined," etc.

No motion to quash or demurrer was interposed to any of the counts of the indictment. When the trial began counsel for defendant objected to the introduction of any evidence, "because each and all of the counts fail to state in a proper manner any charge which would constitute an offense against the laws of the United States." This method of attacking the sufficiency of an indictment is not recognized in this jurisdiction. Shepard v. United States, 87 C. C. A. 486, 160 Fed. 584; United States v. Harmon (D. C.) 45 Fed. 419; 1 Wharton, Crim. Law (7th Ed.) 519, 524, 525; State v. Risley, 72 Mo. 609. The only questions raised in the motion in arrest of judgment touching the sufficiency of the indictment are, (1) that the indictment does not state any offense against the laws of the United States, and (2) that each count of the indictment fails to state the facts constituting a crime or offense against the laws of the United States. These objections are no broader than their terms. No specific defect is suggested.

In the brief of counsel, specific objection is made that the indictment on its face does not show that the grand jury came from the district in which the indictment was found. The record and caption do show that the indictment was presented to the court in the Eastern Division of the Eastern District of Missouri, and that the defendant committed the alleged offense in said division of the district. No challenge to the array was made, nor was this objection raised at any time, or any place on the record as it should have been. Caha v. United States, 152 U. S. 221, 14 Sup. Ct. 513, 38 L. Ed. 415. This objection is not specified in the motion in arrest, nor is any such de-

Digitized by Google

fect specified in the assignment of errors. As the objection goes merely to the matter of the form of indictment, if it were conceded to be important, which we do not decide, it was cured by the provisions of section 1025 of the Revised Statutes of the United States (U. S. Comp. St. 1901, p. 720). Especial criticism was made in argument by the learned counsel for the defendant respecting the sufficiency of the counts, which the evidence shows were predicated of the amendment to section 3 of the oleomargarine act. The objections are (1) that the indictment does not negative the exception contained in the statute, to wit, "except to his own family table, without compensation," and (2) the failure to specify that the manufacturing consisted in adding to or mixing with such oleomargarine any artificial coloration that caused it to look like butter of any shade of yellow. Said amendment is as follows:

"And any person that sells, vends, or furnishes oleomargarine for the use and consumption of others, except to his own family table, without compensation, who shall add to or mix with such oleomargarine any artificial coloration that causes it to look like butter of any shade of yellow, shall also be held to be a manufacturer of oleomargarine within the meaning of said act and subject to the provisions thereof."

That is to say, this amendment was added to section 3, of the original oleomargarine act of August 2, 1886.

The exception is peculiar, if not a misconception. Clearly enough, it has no relation to the act of selling, as it would be a legal absurdity to speak of a person selling, or vending "for his own family table," as the law expects a man to provide for his own table. And it would be more absurd to speak of a person selling an article without compensation, as the term "sell" implies for a consideration. The exception, therefore, has exclusive reference to the word "furnished." It would challenge our conception of the constitutional powers of Congress for it to undertake to tax a person as a manufacturer of oleomargarine whose housewife, as a matter of fancy or taste, should color white oleomargarine so as to give it the hue of yellow butter, for the sole use of the family table. Even as applied to the state, in the exercise of its police power in the matter of regulation of oleomargarine, it has exclusive reference to its sale within the state. Mr. Justice Harlan, in Plumley v. Mass., 155 U. S. 468, 15 Sup. Ct. 156, 39 L. Ed. 223, speaking of the oleomargarine act of the state of Massachusetts, said:

"If any one thinks that oleomargarine not artifically colored so as to cause it to look like butter is as palatable or is as wholesome for the purpose of food as pure butter, he is at liberty under the statute to manufacture in that state, or to sell it there in such manner as to inform the customer of its real character. He is only forbidden to practice in such matters a fraud upon the general public. The statute seeks to suppress false pretenses and to permit fair dealing in the sale of an article of food. It compels the sale of oleomargarine for what it really is by preventing its sale for what it is not."

In United States v. De Witt, 9 Wall. 41, 19 L. Ed. 593, it was held that the provision of the internal revenue act of March 2, 1867, c. 169, § 29, 14 Stat. 484, which undertook to make it a misdemeanor punishable to mix for sale naptha and illuminating oils or to sell or to offer such mixture for sale, etc., was a mere police regulation

Digitized by Google

within the exclusive jurisdiction of the state respecting its internal affairs. The sole justification for the regulation by Congress of such matters is that it comes within the taxing power as a means for raising internal revenue for support of the general government. The tax in question is for carrying on the business of a manufacturer and vender of oleomargarine, and the fee or tax is to license the party, in so far as the general government is concerned, to engage in such business. The requirement respecting labeling, packing, etc., is intended to protect the buyer from being deceived as to what he is really purchasing, and to prevent devices to avoid paying the tax. The statute in question (section 3), declares that "every person who manufactures oleomargarine for sale shall be deemed a manufacturer of oleomargarine," and "every person who sells oleomargarine in less quantities than ten pounds at one time shall be regarded as a retail dealer in oleomargarine." Clearly enough, this indicates that he alone was to be regarded as a manufacturer of oleomargarine who manufactures for sale. Congress is in no wise concerned in what the private citizen may use on his family table, or how he shall prepare it. Evidently, the exception in question was interpolated through an over-zealous regard for the reserved rights of the citizen. But it excepted from the operation of the statute nothing for which the defendant could have been prosecuted as for the violation of a federal statute. And, therefore, it may be treated as mere surplusage, and disregarded in framing an indictment, upon the section for carrying on the business of a manufacturer of oleomargarine without having paid the government tax.

Be this as it may, this objection should be overruled on the authority of Ledbetter v. United States, 170 U. S. 606, 611, 18 Sup. Ct. 774, 776, 42 L. Ed. 1162, which was an indictment against the defendant for carrying on the business of a retail dealer in liquor without having paid the government tax. In discussing the provision contained in section 18 of the statute in question, in defining a retail dealer in liquor, the court adverted to the fact that said section contained an exception as to persons who sell or offer for sale spirits, wine, etc., "otherwise than as hereinafter provided in less quantities than five wine gallons at the same time, shall be regarded as a retail dealer in liquors." It was conceded that the words "otherwise than as hereinafter provided," introduced an exception into the general words of the definition, which suggested a doubt as to whether the words being a part of the section, in the enacting clause, should not have been negatived by the indictment. After saying that the words of the exception probably referred to wholesale liquor dealers, brewers, or others who are either exempt from taxation or pay a different tax, the court said:

"Upon the other hand, when it is averred in the language of section 16 that the defendant carried on the business of a retail liquor dealer without payment of a special tax, the description, though brief, was comprehensive, although section 18 may be referred to as defining the offense with more particularity. But we do not think it necessary to charge the offense in the language of the definition. If Congress had not defined a retail liquor dealer, it would be proper to resort to a dictionary for a definition of this term; but

Digitized by Google

it is no more necessary in one case than in another to charge the offense in the language of the definition."

The foregoing decision also meets the general objection as to the sufficiency of the counts of the indictment in question, in simply charging that the defendant carried on the business of a manufacturer of oleomargarine. The indictment in that case, like the one at bar, followed the words of the statute, that the defendant "did then and there willfully, etc., carry on the business of a retail liquor dealer without having paid the special tax thereunder as required by law." The objection was there made that the indictment should have set out the acts done which constituted the violation of the statute. While conceding that it might be a proper course in framing the indictment to so specialize, it held that the allegation in the language of the statute creating the offense was sufficient. The court said:

"The cases wherein it is held that an indictment in the exact language of the statute is not sufficient are those wherein the statute does not contain all of the elements of the offense as in United States v. Carll, 105 U. S. 611, 26 L. Ed. 1135, where a statute against passing counterfeit money failed to aver the scienter; but where the statute sets forth every ingredient of the offense, an indictment in its very words is sufficient, though that evidence be more fully defined in some other section." U. S. v. Gooding, 12 Wheat. 460, 473, 6 L. Ed. 693; U. S. v. Wilson, Baldw. 78, 119, Fed. Cas. No. 16,730; Hess v. State, 5 Ohio, 5, 22 Am. Dec. 767; Harrington v. State, 54 Miss. 490, 494. Notwithstanding the cases above cited, in our courts the general rule still holds good that upon an indictment for a statutory offense, the offense may be described in the words of the statute and it is for the defendant to show that greater particularity is required by reason of the omission from the statute of some element of the offense. Where the statute completely covers the offense, the indictment need not be made more complete by specifying particulars elsewhere obtained."

The more serious trouble in respect to the allegations of the different counts arises out of the fact that said amendment of 1902 adds another and different manner of constituting a manufacturer of oleomargarine. So it might well be said by a defendant, charged in general terms with carrying on the business of a manufacturer, that it does not reasonably advise him in advance as to which of said statutes it was the purpose of the prosecutor to invoke. This question could not be raised in advance by demurrer, as the indictment on its face would be good under section 4 of the original statute. The clear course for the defendant in such situation to pursue, for his proper protection against unpreparedness and surprise, is by timely motion to compel the prosecutor to furnish him with a bill of particulars. This was aptly and comprehensively expressed by Judge Van Devanter in Rinker v. United States, 151 Fed. 759, 81 C. C. A. 383, as follows:

"When an indictment sets forth the facts constituting the essential elements of the offense with such certainty that it cannot be pronounced ill upon motion to quash or demurrer, and yet is couched in such language that the accused is liable to be surprised by the production of evidence for which he is unprepared, he should in advance of the trial, apply for a bill of the particulars; otherwise, it may properly be assumed as against him that he is fully informed of the process of the case which he must meet upon the trial."

See, also, Putnam v. United States, 162 U. S. 689, 16 Sup. Ct. 923, 40 L. Ed. 1118; Dunbar v. United States, 156 U. S. 192, 15 Sup. Ct.

Digitized by Google

325, 39 L. Ed. 390; Durland v. United States, 161 U. S. 306, 16 Sup. Ct. 508, 40 L. Ed. 709; Dunlop v. United States, 165 U. S. 491, 17 Sup. Ct. 375, 41 L. Ed. 799; Tubbs v. United States, 105 Fed. 59, 44 C. C. A. 357.

Unquestionably the safer course, and the one just to the defendant, for the framer of an indictment under the statute in question to pursue, is by proper averments to clearly indicate on which provision of the statute the indictment is founded. But if the pleader employs the language of said section 4 in framing the indictment, the defendant may not stand mute, as to this, and take the chance of an acquittal, and then, after conviction, be heard for the first time to say he was not sufficiently advised as to the specific charge he was called upon to meet.

The eighth count of the indictment was predicated of section 6 of the oleomargarine act. Without quoting it in full, it is sufficient, for the purpose of this case, to say that it provides regulation for the packing of oleomargarine, prescribing penalties for packing in any other manner. Among such requirements is that the package or receptacle shall be new, not before used for such purpose, without any reference to whether there are stamps, marks, or brands on it. The failure to observe this specific requirement constitutes the offense denounced by the sixth section. The indictment charges that at a given time and place, the defendant "did then and there unlawfully pack colored oleomargarine in firkins, tubs, and other wooden packages, which had theretofore been used for that purpose, he, the said Johnson R. Morris, then and there at the time of so packing the said colored oleomargarine in said packages, which had theretofore been used for that purpose, well knowing that said packages had theretofore been used for the purpose of packing colored oleomargarine, contrary to the form of the statute," etc. Without stating the criticisms made by counsel for the defendant, it is sufficient to say that the charge made was so direct as to leave no reasonable doubt in the mind of the defendant as to what the offense was which he was called to answer. Nurnberger v. United States, 84 C. C. A. 377, 156 Fed. 721; Shepard v. United States, supra.

The tenth count of the indictment was evidently predicated of the last clause of section 13 of the act. The whole section is as follows:

"Sec. 13. That whenever any stamped package containing oleomargarine is emptied, it shall be the duty of the person in whose hands the same is to destroy utterly the stamps thereon; and any person who willfully neglects or refuses so to do shall for each such offense be fined not exceeding fifty dollars, and imprisoned not less than ten days nor more than six months. And any person who fraudulently gives away or accepts from another, or who sells, buys, or uses for packing oleomargarine, any such stamped package, shall for each such offense be fined not exceeding one hundred dollars and be imprisoned not more than one year."

The charge in the indictment is based upon the subdivision of the last clause which inhibits the use for packing oleomargarine in any such stamped package. After laying the time and venue, it charges that the defendant, "did then and there unlawfully, knowingly, and willfully use for packing oleomargarine twenty-five certain stamped pack-

Digitized by Google

ages which had theretofore been packed with colored oleomargarine and stamped denoting the payment of the special tax of ten cents per pound upon colored oleomargarine, as required by law. He, the said Johnson R. Morris, then and there at the time of so packing the oleomargarine in said twenty-five stamped packages, then and there well knowing that the said twenty-five stamped packages had theretofore contained colored oleomargarine and had been emptied of said colored oleomargarine," etc. The only criticism made upon the charge deserving of consideration is the omission of the word "fraudulently" employed in the first part of said clause. It is, in the first place, doubtful if this term was intended to qualify any other act than that of giving away or accepting from another any such package, to which act it would have some intelligible application. As it is not repeated when it comes to the act of selling, buying, or using such package, it must be supplied by implication. The two acts of giving away a stamped package and using it are quite different. The using of such tub unlawfully, knowingly, and willfully, is itself an act harmful to the government independently of the intent with which it is done. Aside, however, from this, the omission of the word "fraudulently" in the indictment was not raised, if at all, until after verdict, under the general phraseology of the motion in arrest of judgment. When the defendant was charged with unlawfuly, knowingly, and willfully doing the particular act, he was certainly advised of the nature and character of the offense with which he was charged. The omission of the descriptive term "fraudulently" is cured after verdict by the provision of section 1025 of the statute. Clement v. United States, 149 Fed. 305, 79 C. C. A. 243; Stearns v. United States, 152 Fed. 901, 82 C. C. A. 48; Dunbar v. United States, 156 U. S. 192, 15 Sup. Ct. 325, 39 L. Ed. 390; Rosen v. United States, 161 U. S. 30, 16 Sup. Ct. 434, 40 L. Ed. 606; Evans v. United States, 153 U. S. 590, 14 Sup. Ct. 934, 38 L. Ed. 830; Shepard v. United States, 87 C. C. A. 486, 160 Fed. 584.

The cumulative sentences imposed upon the defendant are severe; but as the several punishments are within the limitations of the statute we cannot on this writ of error modify or mitigate them. The severity of them finds its extenuation in the fact that the evidence shows the defendant systematically, for a considerable time prior to the indictment, engaged in the business of buying in Chicago white oleomargarine, amounting to over $100,000 worth, on which the tax was only ¼ per cent., shipping it to St. Louis, where it was distributed to his several houses or places of business and subjected by him, or under his direction, to a coloring process, giving it the hue of yellow butter, on which the tax was ten cents, whereby he defrauded the Government out of large sums of revenue.

Finding no reversible error in the record, the judgment of the District Court must be affirmed.

SANBORN, Circuit Judge (dissenting). In Ledbetter v. United States, 170 U. S. 606, 18 Sup. Ct. 774, 42 L. Ed. 1162, the Supreme Court held that an indictment which charged in the words of the statute that the defendant did unlawfully carry on the business of a re-

Digitized by Google

tail liquor dealer without having paid the special tax therefor was sufficient when there was only one way under the statutes in which he could be a retail liquor dealer, and that way was declared by the statute to be by selling or offering for sale foreign or domestic distilled spirits or malt liquors otherwise than as therein provided in less quantities than five gallons at the same time. But the court also said at page 610 of 170 U. S. and page 775 of 18 Sup. Ct. (42 L. Ed. 1162):

"We have no disposition to qualify what has already been frequently decided by this court, that where the crime is statutory it must be charged with precision and certainty, and every ingredient of which it is composed must be clearly and accurately set forth, and that even in the cases of misdemeanors the indictment must be free from all ambiguity, and leave no doubt in the minds of the accused and the court of the exact offense intended to be charged. United States v. Cook, 17 Wall. 168, 174, 21 L. Ed. 538; United States v. Cruikshank, 92 U. S. 542, 562, 23 L. Ed. 588; United States v. Carll, 105 U. S. 611, 26 L. Ed. 1135; United States v. Simmons, 96 U. S. 360, 24 L. Ed. 819; United States v. Hess, 124 U. S. 483, 8 Sup. Ct. 571, 31 L. Ed. 516; Pettibone v. United States, 148 U. S. 197, 13 Sup. Ct. 542, 37 L. Ed. 419; Evans v. United States, 153 U. S. 584, 14 Sup. Ct. 934, 38 L. Ed. 830."

If, as in the Ledbetter Case, the statute had prescribed a single way by which a defendant could constitute himself a manufacturer of oleomargarine a charge of carrying on the business of a manufacturer of oleomargarine would undoubtedly have been sufficient to sustain a conviction upon the proof that the defendant pursued that way, but the statutes applicable to the case at bar provided, "manufacturers of oleomargarine shall pay $600. Every person who manufactures oleomargarine for sale shall be deemed a manufacturer of oleomargarine." Section 3. "That every person who carries on the business of a manufacturer of oleomargarine without having paid the special tax therefor as required by law shall, besides being liable to the payment of the tax, be fined not less than one thousand and not more than five thousand dollars." Section 4. Act of 1886, c. 840, 24 Stat. 209 (U. S. Comp. St. 1901, p. 2229). "And any person that sells, vends or furnishes oleomargarine for the use or consumption of others, except to his own family table, without compensation, who shall add to or mix with such oleomargarine any artificial coloration that causes it to look like butter of any shade of yellow, shall also be held to be a manufacturer of oleomargarine within the meaning of said act and subject to the provisions thereof." Act of May 9, 1902, § 2, 32 Stat. 193 (U. S. Comp. St. Supp. 1907, p. 636).

Here were two distinct offenses punishable by like penalties, (1) carrying on the business of manufacturing oleomargarine out of the raw materials of which it is composed without paying the special tax, and (2) carrying on the business, without paying the special tax, of coloring and selling oleomargarine which had theretofore been manufactured out of the raw materials by others. The charge in each of the first six counts of the indictment was that the defendant did unlawfully "carry on the business of a manufacturer of oleomargarine." There was no proof that he ever manufactured oleomargarine, but there was some evidence that he colored oleomargarine which others had previously manufactured, and sold it. At the close of the trial

Digitized by Google

counsel for the defendant requested the court to instruct the jury to return a verdict in his favor on each of these counts, upon the ground that there was no evidence to sustain them. The court denied this request as to all except the fourth count and charged the jury that if they found that the defendant colored and sold oleomargarine without paying the special tax they might find him guilty. To these rulings the defendant excepted.

The following declarations of the law upon this subject are extracted from the opinions of the Supreme Court in the cases which are cited and reaffirmed in the Ledbetter Case. "No essential element of the crime can be omitted without destroying the whole pleading. The omission cannot be supplied by intendment or implication, and the charge must be made directly and not inferentially, or by way of recital. * * * The doctrine invoked by the solicitor general that it is sufficient in an indictment upon a statute to set forth the offense in the words of the statute does not meet the difficulty here. Undoubtedly the language of the statute may be used in the general description of an offense, but it must be accompanied with such a statement of the facts and circumstances as will inform the accused of the specific offense coming under the general description with which he is charged." United States v. Hess, 124 U. S. 483, 487, 8 Sup. Ct. 571, 573, 31 L. Ed. 516. "It is an elementary principle of criminal pleading that, where the definition of an offense, whether it be at common law or by statute, 'includes generic terms, it is not sufficient that the indictment shall charge the offense in the same generic terms as in the definition, but it must state the species—it must descend to particulars.' 1 Arch. Cr. Pr. and Pl. 291. The object of the indictment is, first, to furnish the accused with such a description of the charge against him as will enable him to make his defense, and avail himself of his conviction or acquittal for protection against a further prosecution for the same cause; and, second, to inform the court of the facts alleged, so that it may decide whether they are sufficient in law to support a conviction, if one should be had. For this, facts are to be stated, not conclusions of law alone. A crime is made up of acts and intent; and these must be set forth in the indictment with reasonable particularity of time, place, and circumstances." United States v. Cruikshank, 92 U. S. 542, 558, 23 L. Ed. 588. "A rule of criminal pleading, which at one time obtained in some of the circuits, and perhaps received a qualified sanction from this court in United States v. Mills, 7 Pet. 138, 8 L. Ed. 636, that an indictment for a statutory misdemeanor is sufficient if the offense be charged in the words of the statute, must, under more recent decisions, be limited to cases where the words of the statute themselves, as was said by this court in United States v. Carll, 105 U. S. 611, 612, 26 L. Ed. 1135, 'fully, directly and expressly, without any uncertainty or ambiguity, set forth all the elements necessary to constitute the offense intended to be punished.' The crime must be charged with precision and certainty, and every ingredient of which it is composed must be accurately and clearly alleged. United States v. Cook, 17 Wall. 168, 174, 21 L. Ed. 538; United States v. Cruikshank, 92 U. S. 542, 558, 23 L. Ed. 588. 'The fact that the statute in question, read in the light of the common law,

Digitized by Google

and of other statutes on the like matter, enables the court to infer the intent of the Legislature, does not dispense with the necessity of alleging in the indictment all the facts necessary to bring the case within that intent.' United States v. Carll, 105 U. S. 611, 26 L. Ed. 1135." Evans v. United States, 153 U. S. 584, 587, 14 Sup. Ct. 934, 38 L. Ed. 830.

The offenses of which the defendant was found guilty under counts 1, 2, 3, 5, and 6 of the indictment were that he colored and sold oleomargarine which had been manufactured by others. The averment of the indictment that the defendant did "carry on the business of a manufacturer of oleomargarine" was a sufficient charge that he manufactured oleomargarine out of the raw materials, that he made oleomargarine out of substances which were not oleomargarine before he manufactured it out of them, for this is the common, ordinary, and rational meaning of the words of the allegation. But did the averment that the defendant did "carry on the business of a manufacturer of oleomargarine" charge him with the offense of which he was convicted, the offense of purchasing oleomargarine which had been manufactured by others, of coloring it and of selling it without paying the special tax? The elements of the latter offense were coloring and selling oleomargarine which had been made by others, the elements of the offense charged in the indictment were transforming the raw materials into oleomargarine—manufacturing oleomargarine. If the indictment had used the words of the statute of 1902, which described and first made the coloring and vending of oleomargarine without paying the special tax an offense, it would probably have been sufficient, but it used the words of the statute of 1886, which in no way set forth or intimated the charge of any other offense than manufacturing oleomargarine. In my opinion these counts of this indictment do not fall under the rule in Rinker v. United States, 151 Fed. 755, 759, 81 C. C. A. 379, 383, that "when an indictment sets forth the facts constituting the essential elements of the offense with such certainty that it cannot be pronounced ill upon motion to quash or demurrer, and yet is couched in such language that the accused is liable to be surprised by the production of evidence for which he is unprepared, he should, in advance of the trial, apply for a bill of particulars; otherwise it may properly be assumed as against him that he is fully informed of the precise case which he must meet upon the trial"; because the indictment does not set forth any of the facts constituting the essential elements of the offense of which this defendant was convicted, and because these counts of the indictment are not ambiguous, because they clearly set forth another offense of which there was no proof, they charge the offense of manufacturing oleomargarine, and they neither aver nor intimate the offense of coloring and vending oleomargarine manufactured by others, or any of the essential elements of that offense. Neither the indictment nor the words of the statute used therein "fully, directly and expressly, without any uncertainty or ambiguity, set forth all the elements necessary to constitute the offense intended to be punished." Evans v. United States, 153 U. S. 587, 14 Sup. Ct. 936, 38 L. Ed. 830; nor was it "accompanied with such a statement of the facts and circumstances as will inform

Digitized by Google

the accused of the specific offense coming under the general description with which he is charged." United States v. Hess, 124 U. S. 483, 487, 8 Sup. Ct. 571, 573, 31 L. Ed. 516. The Supreme Court in the Ledbetter Case said:

"Where the crime is a statutory one it must be charged with precision and certainty, and every ingredient of which it is composed must be clearly and accurately set forth."

The ingredients of the offense of which the defendant was convicted were coloring oleomargarine and selling it without paying the special tax. None of these ingredients were either set forth, or averred, or suggested by the indictment.

As I read and understand the first six counts of this indictment in the light of the opinions of the Supreme Court to which reference has been made, the defendant was clearly charged thereby with manufacturing oleomargarine out of the raw materials without paying the special tax and there was no proof of that offense. He was convicted of coloring and selling oleomargarine, and there was no charge of that offense. Proof without averment is as futile as averment without proof, and the court below, in my opinion, should have instructed the jury to return a verdict for the defendant on counts 1, 2, 3, 5, and 6 of the indictment, and the judgments below upon them should be reversed, and a new trial should be granted.

(161 Fed. 687.)

FEDERAL LEAD CO. v. SWYERS.

(Circuit Court of Appeals, Eighth Circuit. April 27, 1908.)

No. 2,679.

1. MASTER AND SERVANT—INJURIES TO SERVANT—ASSUMED RISK.

Plaintiff, when injured, was between 19 and 20 years old, sound in body and mind, and had been in defendant's service for 13 months, performing the same duties, which consisted in part of mounting a platform near the roof of defendant's factory and oiling the boxes of a shaft, soaping a belt running over a pulley, and tending to the machinery operated there. On the shaft two pulleys were keyed, over one of which a sprocket chain was operated, and just beyond the shaft and substantially parallel with it was a cable. Plaintiff, while on the platform attending to his duties of oiling the machinery and soaping the belt, undertook to restore the cable, which had worked off the sheave, and in doing so reached over the shaft. His feet slipped on the platform, and in some way he was caught by the revolving shaft or pulleys and injured. Plaintiff was familiar with the situation, and during his entire employment had been on the platform several times every day. He appreciated the danger of replacing the cable while standing on the platform, and took precautions to prevent falling by reason of the slippery condition of the platform, or being entangled in the shaft or pulleys while reaching over them. *Held*, that plaintiff assumed the risk.

[Ed. Note.—For cases in point, see Cent. Dig. vol. 34, Master and Servant, §§ 574–600.

Assumption of risk incident to employment, see note to Chesapeake & O. R. Co. v. Hennessey, 38 C. C. A. 314.]

2. SAME—STATUTES.

Rev. St. Mo. 1899, §§ 6433, 6434 (Ann. St. 1906, pp. 3217, 3218), requiring dangerous machinery in factories to be guarded, and prohibiting the

Digitized by Google

employment of minors or women to work between the fixed or traversing part of any machine while in motion by action of mechanical power, does not deprive the master of the defense of assumed risk in an action for injuries to an employé by the master's alleged violation of such sections.

[Ed. Note.—For cases in point, see Cent. Dig. vol. 34, Master and Servant, §§ 544–546.]

3. SAME—APPLICATION OF DOCTRINE—COMMON LAW.

Rev. St. Mo. 1899, § 4151 (Ann. St. 1906, p. 2250), declares that the common law of England and all statutes and acts of Parliament made prior to the fourth year of the reign of James I, of a general nature and not local to the kingdom, nor repugnant to or inconsistent with the Constitution of the United States and of the state of Missouri, or the statutes of that state, shall be the rule of action and decision in that state, any law or custom of usage to the contrary notwithstanding. *Held*, that such section was sufficient to make the doctrine of assumed risk in an action against a master for injuries to a servant applicable as a part of the common law of Missouri, though such doctrine first received judicial utterance in 1837, the principle having existed prior to the reign of James I.

4. COURTS—FEDERAL COURTS—RULES OF DECISION—INTERMEDIATE COURTS OF APPEAL.

The decisions of the Missouri Courts of Appeal, while entitled to respectful consideration, are not the decisions of the highest judicial tribunal of the state, which are alone binding on the federal courts in their construction of local statutes.

[Ed. Note.—For cases in point, see Cent. Dig. vol. 13, Courts, § 950.

Conclusiveness of judgment between federal and state courts, see notes to Kansas City, Ft. S. & M. R. Co. v. Morgan, 21 C. C. A. 478; Union & Planters' Bank of Memphis v. City of Memphis, 49 C. C. A. 468.]

5. WORDS AND PHRASES—"REQUIRE."

The word "require" means to demand; to ask as of right and by authority; to insist on having; to exact.

[Ed. Note.—For other definitions, see Words and Phrases, vol. 7, pp. 6122, 6125.]

6. MASTER AND SERVANT—INJURIES TO SERVANT—AGE.

Where a servant was between 19 and 20 years old, sound in body and mind, at the time he was injured, and possessed of the knowledge and experience of an adult, he was chargeable with the consequence of such knowledge, and the fact that he was under 21 years of age was not material in determining whether he assumed the risk of the dangers he involuntarily encountered in the operation of defendant's machinery.

[Ed. Note.—For cases in point, see Cent. Dig. vol. 34, Master and Servant, §§ 601–609.]

In Error to the Circuit Court of the United States for the Eastern District of Missouri.

Robert A. Holland, Jr. (James A. Seddon, on the brief), for plaintiff in error.

Edward A. Rozier (B. H. Boyer, on the brief), for defendant in error.

Before SANBORN and ADAMS, Circuit Judges, and PHILIPS, District Judge.

ADAMS, Circuit Judge. This was an action in the nature of trespass on the case by a servant for damages resulting from negligence of the master. The defenses were the general issue, contributory negligence, and assumption of risk. The verdict and judgment

Digitized by Google

below, from which the defendant prosecutes error, were in favor of the plaintiff. Ten different specifications of negligence are found in the petition, three of which only require consideration by us. It is charged (1) that defendant failed to exercise reasonable care in providing plaintiff a place to work in and machinery to work with, and thereby violated a primary duty imposed upon the master by the common law; (2) that plaintiff was required to work dangerously near to belting, shafting, gearing, and drums which were not guarded as required by a statute of Missouri; (3) that plaintiff was required to work between the fixed or traversing parts of a machine while in motion, in violation of a statute of Missouri, and that as a result of the foregoing the plaintiff sustained an injury. The statutes just referred to are sections 6433, 6434, Rev. St. Mo. 1899 (Ann. St. 1906, pp. 3217, 3218). They are as follows:

"Sec. 6433. The belting, shafting, gearing and drums, in all manufacturing, mechanical and other establishments in this state, when so placed as to be dangerous to persons employed therein or thereabout while engaged in their ordinary duties, shall be safely and securely guarded when possible; if not possible, then notice of its danger shall be conspicuously posted in such establishments.

"Sec. 6434. No minor or woman shall be required to clean any part of the mill, gearing or machinery in any such establishment in this state, while the same is in motion, or work between the fixed or traversing parts of any machine while it is in motion by the action of steam, water or other mechanical power."

Plaintiff at the time of his injury was between 19 and 20 years old, sound in body and mind, had been in the service of defendant for 13 months before he was injured, and during all that time had been performing the same duties. These duties consisted in part of mounting the platform located near the roof of defendant's factory or mill for the purpose of oiling the boxes of a shaft, soaping a belt running over a pulley located near by, and otherwise attending to the machinery operating there. The platform was 22 feet long and 3 feet wide, without a railing. The power shaft for running the machinery below, consisting of elevators, jigs, and rolls for handling and crushing ores, ran horizontally near to and a little above the platform. On this shaft were keyed two pulleys, about 18 inches apart, over one of which a belt and over the other a sprocket chain operated. Just beyond the shaft, and running substantially parallel with it, a cable used for hauling ores up an incline for treatment in the mill was in operation. This cable occasionally worked off the sheave over which it ran and needed replacement.

The testimony tends strongly to show that the duty of watching the cable and replacing it when necessary devolved upon another person; but there is evidence that plaintiff esteemed it his duty, and had frequently performed it, to reach over the shaft while standing on the platform and, when necessity required it, replace the cable on the sheave. The shaft ran parallel with and about two feet higher than the platform, and it was necessary to reach over it at a point about midway between the pulleys in order to manipulate the cable. On the occasion in question Swyers, while on the platform attending to his duties of oiling the machinery and soaping the belt, under-

Digitized by Google

took to restore the cable, which had worked off the sheave, to its proper place on the sheave. In doing so he reached over the shaft, his feet slipped on the platform, and in some way he was caught by the revolving shaft or pulleys and injured. There was evidence tending to show that the platform was slippery, the shaft slightly bent, and the boxes through which it passed loose.

The plaintiff, testifying in his own behalf, frankly admitted that he had been familiar for 13 months with the full situation disclosed by the proof as just stated. During all this time he had been on the platform several times a day in the discharge of his duties. He knew well the relative location and physical condition of the platform, shaft, pulleys, and cable, and fully realized each and every peculiarity or defect now claimed by him to have existed. He fully appreciated the danger of replacing the cable on the sheave while standing on the platform, and admitted that he had always been on guard and had taken watchful precautions to prevent falling by reason of the slippery condition of the platform or being entangled in the revolving shaft or pulleys while reaching over them. He testified that the condition of things existing at the time of his injury had prevailed and had been fully known and appreciated by him for a long time theretofore. With these undisputed facts, admitted to be true by plaintiff, there can be no question, under the firmly established doctrine of this court, that he assumed the risk and danger of the injury which befell him, unless the statutes of Missouri released him therefrom. The rule governing this matter has frequently been stated, and recently in the case of Kirkpatrick v. St. Louis & San Francisco Railroad Co., 87 C. C. A. 38, 159 Fed. 858, has been restated as follows:

> "If the risks and dangers which caused his [the servant's] death were the usual and ordinary risks and dangers of the employment, he assumed them, provided they were known to and appreciated by him. St. Louis Cordage Co. v. Miller, 61 C. C. A. 477, 126 Fed. 495, 511, 63 L. Ed. 551, and cases cited. If, on the other hand, they were not the usual and ordinary risks and dangers, but arose from negligent defects in appliances or a negligent method of operating them required by the master, then he assumed all risks and dangers arising from such defects and such operation, if they were known to him, or if they were plainly observable by him."

The present case in any or all of its aspects falls so well within the doctrine of assumption of risk just stated that, except for the statutes, no claim of defendant's liability is seriously made. This brings us to the only remaining question: Do the statutes cut off the defense of assumption of risk? In St. Louis Cordage Company v. Miller, supra, Glenmont Lumber Co. v. Roy, 61 C. C. A. 506, 126 Fed. 524, Denver & R. G. R. Co. v. Norgate, 72 C. C. A. 365, 141 Fed. 247, 6 L. R. A. (N. S.) 981, and American Linseed Co. v. Heins, 72 C. C. A. 533, 141 Fed. 45, we, after exhaustive consideration, have repeatedly answered this question in the negative. A reference to those cases will disclose that the authorities in this country and England were carefully and critically examined, compared, and considered, and no pains spared in the effort to reach the right conclusion. In such circumstances we deem it unprofitable and unwise to open up

Digitized by Google

the subject or enter upon a reconsideration of the doctrine there announced, and, notwithstanding the able and insistent argument of learned counsel for plaintiff, must decline to do so; but, as they have invited our attention to certain matters supposed not to have been considered before, we will take them up.

It is said that the defense of assumption of risk rests in a common-law principle expressed by the maxim "volenti non fit injuria," and that this principle first received judicial sanction in England in the case of Priestly v. Fowler, 3 M. & W. 1 (in 1837), and therefore was never adopted in Missouri, where this cause of action arose, and is not now the law in that state. This contention would probably surprise the learned judges of the Supreme Court of Missouri, who have repeatedly recognized and applied that principle in the administration of civil justice in that state. However that may be, the adoption of the common law of England by section 4151, Rev. St. Mo. 1899 (Ann. St. 1906, p. 2250), does not in terms or by necessary implication limit it to such law as might have been judicially declared prior to the fourth year of the reign of James I. That section is:

"The common law of England and all statutes and acts of Parliament made prior to the fourth year of the reign of James the First, and which are of a general nature, not local to that kingdom, which common law and statutes are not repugnant to or inconsistent with the Constitution of the United States, the Constitution of this state, or the statute laws in force for the time being, shall be the rule of action and decision in this state, any law, custom or usage to the contrary notwithstanding."

Principles of right are never born of a judicial utterance. They exist before the utterance, and the fact of their existence affords the sole ground for their recognition and employment in the administration of remedial justice. Moreover, section 4151 does not purport to fix the time when "the common law," as distinguished from "statutes and acts of Parliament," was required to be known or recognized in England in order to become the rule of action in Missouri.

Our attention is next called to three cases in the Kansas City Court of Appeals (Stafford v. Adams, 113 Mo. App. 717, 88 S. W. 1130; Nairn v. National Biscuit Co., 120 Mo. App. 144, 96 S. W. 679; McGinnis v. Printing Co., 122 Mo. App. 227, 99 S. W. 4) wherein that court decided, in substance, that the defense of assumption of risk was not available to a manufacturing company which, by its failure to conform to the requirements of the factory acts in question, had caused injury and damage to an employé. While those decisions, by reason of the learning and ability of the distinguished judges who pronounced them, are entitled to our respectful consideration, they are not the decisions of the highest judicial tribunal of the state (Const. Mo. art. 6, § 3, and amendment of 1884, § 2) construing local statutes, which alone are binding upon federal courts (Leffingwell v. Warren, 67 U. S. 599, 17 L. Ed. 261; Post v. Supervisors, 105 U. S. 667, 26 L. Ed. 1204, Bucher v. Cheshire Railroad Co., 125 U. S. 555, 8 Sup. Ct. 974, 31 L. Ed. 795), and, inasmuch as we had deliberately placed a different construction upon acts in question before those cases were promulgated, we are not inclined to now recede from it.

Digitized by Google

We are again asked to say that, even if the defense of assumption of risk may prevail in a case predicated upon a violation of section 6433, requiring the guarding of belting, shafting, gearing, and drums, it cannot prevail in a case predicated upon section 6434, providing that a minor or woman shall not be required to work between the "fixed or traversing parts of a machine." We think it is extremely doubtful if the facts of this case bring it within the contemplation of section 6434. This court took occasion in the recent case of National Candy Company v. Miller, 160 Fed. 56, to comment upon the meaning of that section, and Philips, District Judge, speaking for the court, said:

> "Precisely what is meant by the fixed or traversing parts of a machine is difficult to define."

Assuming, however, that it means, as there suggested, "between the fixed and traversing parts of a machine," and that the Legislature meant that minors or women should not be required to work in a place of distraction between the parts of a machine which are fixed and those which are movable with traversing action, we are still in grave doubt whether the work which Swyers was engaged in when injured was of that character. He was quite a distance away from the machines used by defendant for the purpose of crushing and concentrating ores. He was engaged at the top of the building, about the shaft and belt designed to carry the power to the machines. Was this between the fixed and traversing parts of a machine? No evidence was introduced to show how, mechanically speaking, it could be so, and certainly it is not so clear to the judicial mind that we can conclusively take judicial cognizance that it was so. However, let us assume, as counsel have assumed, that it was. The statute in question (section 6434) is not only doubtful, as suggested by Judge Philips, supra, but appears to be so worded as to naturally suggest a certain freedom of action and choice by the servant. It is not in terms a command prohibiting the master from permitting a minor or woman to work between the fixed and traversing parts of a machine. It says:

> "No minor or woman shall be required to * * * work between the fixed or traversing parts of a machine."

As commonly understood and employed, the word "require" means "to demand," "to ask as of right and by authority," "to insist on having," "to exact;" and these meanings have the sanction of lexicographers. See Webster's and Century Dictionaries. If a servant, uncontrolled by any insistence of the master, voluntarily and of his own choice takes work between the parts of a machine in question, as the plaintiff in this case did, it is doubtful if he is required to do so within the meaning of the statute. If the Legislature had intended to absolutely prohibit the doing of such work, and to subject the master to the civil liability attendant thereon, as well as to the fine and imprisonment denounced by section 6450 (Ann. St. 1906, p. 3220) for its violation, it would have been an easy matter to employ appropriate language to clearly express that intent, such as, "No servant shall be permitted, allowed, suffered,"

Digitized by Google

etc., to do so. These observations are made with the hope that the Supreme Court of Missouri will appreciate the embarrassment evidenced by them and soon place a definitive construction upon the statute in question, and thus make its meaning certain and authoritative. For the purposes of this case, however, we assume, without deciding, that the work of a minor between the fixed and traversing parts of a machine is prohibited by the statute.

Learned counsel for plaintiff argue that as the basis of the doctrine of the Miller and Norgate Cases is knowledge by the servant that the machine was not guarded as required by the statute, or, in other words, knowledge of some positive observable fact, that doctrine can have no application to this case, in which a minor is involved and in which knowledge of the fact that he is a minor is all that can be imputed to him; and the question is asked: "How can a minor assume the risk of being a minor?" The age, experience, and intelligence of the plaintiff afford a complete demonstration that the mere fact that he had not reached the age of legal majority is of no importance in this case. He had the knowledge, experience, and discretion of an adult, and must be held to their consequences. It is not correct, we think, to say that all that can be imputed to the plaintiff is knowledge of the fact that he was a minor. The record discloses long length of service by him for the defendant in the same position he occupied when injured, perfect familiarity with the condition, defective, dangerous, or otherwise, of the machinery and appliances about which he was working, and an unusually acute appreciation of the risk and danger incident thereto. He knew what he was doing, and where and in what relation to the machines or machinery he was working. No one could have known more accurately about those things than he. His daily experience with the machinery for 13 months at least precludes the legal possibility of any contention that he did not understand its construction or operation, and his own admission estops him from denying that he did not appreciate the danger of working with or near it. If he was required to work between the fixed or traversing parts of a machine, within the meaning of section 6434, he knew it as well if not better than anyone. The doctrine of the Miller and Norgate Cases in our opinion is strictly applicable to a servant seeking to hold the master liable for violating the provisions of this section of the law. By voluntarily accepting and continuing for a year or more in service of the kind assumed to be prohibited, and with the knowledge and appreciation of the risks and danger connected with it as shown by the proof, he assumed the risk of so doing.

The conclusions already announced dispose of this case without the necessity of passing on other questions presented by the assignment of errors.

The judgment below must be reversed, and the cause remanded to the Circuit Court, with direction to grant a new trial; and it is so ordered.

Digitized by Google

JACOBS v. UNITED STATES.

(Circuit Court of Appeals, First Circuit. April 29, 1908.)

No. 747.

1. INDICTMENT AND INFORMATION—MATTERS REQUIRING PROOF—RECITALS IN INDICTMENT.

The rule applied that recitals in an indictment that certain details of the offense charged were to the grand jurors unknown do not require the prosecution to prove on the trial that they were in fact so unknown, nor is the fact that a witness at the trial discloses a knowledge of such facts evidence to the contrary of such recitals.

[Ed. Note.—For cases in point, see Cent. Dig. vol. 27, Indictment and Information, § 530.]

2. WITNESSES—RE-EXAMINATION—DISCRETION OF COURT.

The rule applied that under the federal practice, permitting the re-examination of witnesses in a criminal case with respect to matters not brought out in cross-examination is within the discretion of the trial court.

[Ed. Note.—For cases in point, see Cent. Dig. vol. 50, Witnesses, § 930.]

3. BANKRUPTCY—OFFENSES AGAINST BANKRUPT LAW—EVIDENCE—COMPETENCY.

On the trial of a bankrupt who was a dealer in jewelry, charged in the indictment with having concealed from his trustee certain jewelry, it was not under the circumstances error to admit evidence of the amount and value of defendant's stock in trade a few days prior to the filing of the petition in bankruptcy, and also a short time afterward, where the jury were properly instructed and cautioned in reference to such testimony.

4. SAME.

On such trial proofs of claims filed against the defendant's estate in bankruptcy not shown to have been examined or approved by him were not admissible as admissions as to the amount of property he had purchased prior to his bankruptcy, and to be accounted for.

5. WITNESSES—COMPETENCY—HUSBAND AND WIFE—CONFIDENTIAL CHARACTER OF COMMUNICATION.

On the trial of a criminal case, the admission of the testimony of the divorced wife of defendant as to the contents of a lost paper, which had been handed to her by defendant while she was still his wife, during a consultation between them and others relating to matters out of which the prosecution arose, was not reversible error, where it did not appear from the record that the communication was confidential, or that the paper was not read by the others present.

[Ed. Note.—For cases in point, see Cent. Dig. vol. 50, Witnesses, §§ 739, 740.]

6. SAME—DEFENDANT IN CRIMINAL CASE—PRIVILEGE.

On the trial of a bankrupt for a criminal offense, it was error to permit the prosecuting attorney, on the cross-examination of defendant as a witness, to read from a copy of his examination before the referee in the bankruptcy proceedings, and to interrogate him thereon for the purpose of impeachment, under Bankr. Act July 1, 1898, § 7a (9), c. 541, 30 Stat. 548 (U. S. Comp. St. 1901, p. 3424).

In Error to the District Court of the United States for the District of Massachusetts.

Elbridge R. Anderson (Charles W. Bartlett and Arthur Smith, on the brief), for plaintiff in error.

Asa P. French, U. S. Atty., and Guy A. Ham, Asst. U. S. Atty.

Digitized by Google

Before COLT, PUTNAM, and LOWELL, Circuit Judges.

PUTNAM, Circuit Judge. The plaintiff in error was convicted on an indictment based on that portion of the twenty-ninth section of the bankruptcy act of July 1, 1898 (chapter 541, 30 Stat. 544 [U. S. Comp. St. 1901, p. 3418]), which punishes a bankrupt who has "knowingly and fraudulently concealed while a bankrupt from his trustee any of the property belonging to his estate in bankruptcy." He assigned 41 alleged errors, covering 13 printed pages of the record. A number of his propositions are so clearly contrary to law, and have been so thoroughly settled, that we ought not to have been troubled with them. Among these is the claim with regard to an allegation in the indictment as to which the grand jury reported that the details were unknown to them. The plaintiff in error maintains that the burden rested on the United States to show that they were in fact so unknown, when it has been twice held otherwise by the Supreme Court in cases not brought to our attention by either party. Coffin v. United States, 156 U. S. 432, 451, 15 Sup. Ct. 394, 39 L. Ed. 481, and Frisbie v. United States, 157 U. S. 160, 167, 15 Sup. Ct. 586, 39 L. Ed. 657. Another proposition is the exception taken to the re-examination of witnesses with reference to matters not brought out in cross-examination; while, if anything is settled in federal practice, it is that the direction of the examination of witnesses in such particulars is within the discretion of the trial court. As to the first proposition, we may add that it is clear that the mere fact that a witness is called at the trial who then discloses that he knows that which the grand jury reported unknown to them, is not evidence to the contrary of the allegation of the indictment. It is merely subsequent matter. As to the second proposition, we may also add that, with reference to every topic which is ordinarily controlled by the discretion of the court, there may be such an abuse of discretion that an exception lies; but no attempt at a showing of that character is made here. Like well-known rules dispose of all exceptions based on the fact that the court allowed re-examination of the witnesses for the United States after they had been cross-examined.

There are two counts in the indictment; one alleging that the bankrupt concealed from his trustee a diamond brooch, and the second the concealment of "certain jewelry," a more particular description of which is said to have been to the grand jurors unknown. The traverse jury returned a verdict on each count, finding Jacobs guilty on each; and, so far as anything is shown in the record, he was sentenced on both.

The record shows that the bankrupt had been a jeweler in Worcester, and that his stock consisted of jewelry, and more particularly of diamonds. Therefore any evidence with reference to his stock in trade, although not more particularly described, may well be regarded to have related to "jewelry" as that word is used in the second count.

One alleged error called to our attention relates to the testimony of a witness in regard to the amount and the value of the stock found in Jacob's store about the 15th day of October; the petition in bank-

Digitized by Google

ruptcy having been filed on the 3d day of September. Subject to the objection of Jacobs, this witness, who made an appraisal of the stock at the date named, was permitted to testify what he then found, and also to estimate the value of it, which he did at from $2,000 to $3,000. Each branch of this proof was objected to on the ground that it was immaterial what was found at that late date. On the other hand, the United States offered the testimony saying that they would show that, just prior to the bankruptcy, there was a much larger amount of stock on hand of great value; and on that assurance the testimony was admitted. Subsequently, the United States introduced a witness who testified that, on the 16th day of August, Jacobs took him outside his shop, and showed him the goods in the window, and said that the stock was worth about $15,000. Of course such a comparison of values is a very dangerous class of testimony, and very apt to mislead; but, as the court is to be presumed to have fully cautioned the jury in reference to it, we see no possible ground on which it could be entirely excluded under the second count in view of the description of the property which that count alleges to have been concealed, and of the fact that the stock wholly consisted of jewelry.

Another alleged error relates to the testimony of the witness who had the conversation with Jacobs in August. The conversation as a whole was objected to as immaterial, but what we have already said disposes of this. During the course of the conversation, as the witness testified, Jacobs showed him some promissory notes, claiming to own them, and he also testified in reference to prices which Jacobs paid for certain goods. These were objected to; but, as the objections and exceptions were both general, they do not, under the circumstances, and especially under the practice in this court, require our attention because, so far as we can discover, the conversation as to these topics was immaterial and could not have been prejudicial.

Another topic brought to our attention by the plaintiff in error is covered by the following extract from the record:

"William Nelson, recalled, testified that he had all the papers connected with the bankruptcy proceedings in the case of the defendant, Jacobs, except what had been put in evidence; that he had 23 proofs of claims besides those that were marked in evidence. (Twenty-three proofs of claims are offered in evidence.)

"Objected to on the ground that proofs of these individual claims were not competent to prove anything so far as the ownership of property was concerned, or whether property was in the hands of the bankrupt or not at any time either before or after the date of the bankruptcy. They were offered as admissions of the defendant as to ownership or possession of property.

"The Court: I rule that proofs of claims are admissible, because they are a part of the record of the bankruptcy proceedings.

"Mr. Anderson: And will your honor save my exception?

"The Court: Your exception is saved.

"Mr. Anderson: And to each one of them. I understand I must be particular about them.

"Twenty-three proofs of claims were marked 'Exhibit 7,' which may be referred to at the hearing on this bill."

The purpose of admitting the proofs of claims was evidently in line with the testimony which we have just considered; that is, with the view of showing that the bankrupt had purchased prior to his

Digitized by Google

bankruptcy a large amount of goods. This, we understand, is what was meant by the expression in the course of the discussion that they were offered as admissions on the part of the bankrupt as to ownership or possession of property. We can conceive of no other purpose for which they were admitted, and we assume that we are right in that particular. Clearly, unless some special reason is shown to the contrary, these proofs were strictly inter alios, mere declarations of third persons; and the admission of them was a plain violation of the rule relative to the use of that class of evidence. It is claimed, however, by the United States, that it was the duty of Jacobs, under the statutes in bankruptcy, to examine the claims when offered in proof, and to advise if they were not correct. This, however, is only a partial statement, and what is omitted is fatal to the proposition. It is true that section 7 of the act of July 1, 1898 (30 Stat. 548, c. 541 [U. S. Comp. St. 1901, p. 3424]), provides that, in the case of any person having to the knowledge of the bankrupt proved a false claim, he (the bankrupt) shall disclose that fact to his trustee; but it also further provides that he shall not be required "to examine claims except when presented to him unless ordered by the court or a judge thereof for cause shown." There is no evidence in the record of any such presentation to Jacobs of the claims in question, or that he had any actual knowledge of what was proved against the estate, or that he had ever been requested in any way to take any part in reference thereto. Consequently, the admission of this evidence was clearly erroneous and prejudicial. It relates, however, only to the second count, because it was only as to the second count that a comparison could be useful as between the amount of assets which the bankrupt had prior to the bankruptcy and what was turned over to his trustee. The United States claim that the plaintiff in error opened the door for this evidence; but, as the case results, it is not necessary that we should determine this proposition.

An important question arises from the fact that she who had been the wife of the bankrupt, but had been divorced from him before the trial, testified against him. Among other things, she testified to an interview occurring before the divorce. There were present, besides the witness and the bankrupt, the bankrupt's brother and his wife. It is evident that the gathering of the four was an open consultation between them as to the method of meeting certain proceedings against the bankrupt which were anticipated, and, so far as we understand the record, these proceedings included the probability of the indictment now pending before us. At any rate, the nature of the conference was a joint consultation of the character which we have described. The plaintiff's former wife testified that during the conference the bankrupt gave her a slip containing questions that were likely to be asked her as a witness, and proposed answers. This paper was kept for several weeks and then destroyed or lost. She was asked by the prosecuting attorney what she could remember as to its contents. This was objected to on the ground that the paper was a communication given by the husband to the wife, and therefore inadmissible. The testimony asked for was admitted, and an exception saved. The ob-

Digitized by Google

jection stated that the paper was not read in the presence of any third person, but the record does not show whether it was so read or not. The passing of it by the bankrupt to his wife was a part of the occurrences during the joint consultation of the four persons. The rule is clear that communications between a husband and wife are ruled out only when they are confidential. Chase's Stephens' Digest of the Law of Evidence (2d Ed.) 278. The rule is also stated incidentally to the same effect in Stein v. Bowman, 13 Pet. 209, 222, 10 L. Ed. 129, and Hopkins v. Grimshaw, 165 U. S. 342, 349, 17 Sup. Ct. 401, 41 L. Ed. 739. Therefore the contents of the paper in question could not be excluded unless it was a matter in confidence between the husband and the wife as that rule is usually understood. Whether it was a matter in confidence between the husband and the wife was, of course, a question to be passed on in the first place by the presiding judge, who must, in the first place, determine whether or not the evidence was admissible or otherwise. His ruling on a question of that character where the facts were clearly doubtful would not be set aside by an appellate tribunal. Inasmuch as the rule of law is such a common one, and so well known, and as the objection was of such a character as to clearly call the attention of the presiding judge to whatever propositions were in issue, we must assume that his ruling involved a finding by him that the delivery of the paper from the husband to the wife was a mere incident to the general consultation between the four parties, and therefore not at all in confidence. There was no such preliminary examination in form, although it might have been insisted on by the bankrupt, and we have therefore nothing to show that the paper was not, in fact, read to the other persons to the interview, or read by them, or to show that it was at all confidential. Therefore this ruling of the learned trial judge must stand.

The most important question in the case arose as follows: Previous to his trial, Jacobs had been examined as a bankrupt. The seventh section of the bankruptcy act of July 1, 1898, provides: "But no testimony given by him"—that is, the bankrupt—"shall be offered in evidence against him in any criminal proceeding." The bankrupt offered himself as a witness. On the cross-examination, a book was produced called the "sales book," which we understand to have been a book kept by the bankrupt in his business as a jeweler, though this is not clear to us. From that book apparently some leaves had disappeared, and apparently there was a claim that this was the result of mutilation by the bankrupt. After he had been somewhat inquired of by the prosecuting attorney in reference to this book, the question was put: "Well, you gave an altogether different description about that, about what happened to that book, didn't you, before the referee?" This was objected to in a proper and clear manner, on the ground that, under the statutory provision which we have cited, it was not lawful to use the examination in these proceedings. The question was admitted, and exceptions were saved to that entire line of interrogation. Following it up, quite a list of questions was asked the bankrupt as to his examination before the referee. The following is illustrative: "Do you remember a question like this: What became of those ac-

Digitized by Google

counts?" The bankrupt was compelled to answer. Apparently, from the way in which these questions were put, the prosecuting attorney had in his hands the examination before the referee, and read from it in the presence of the jury.

In answer, the United States make two replies: One is that the examination—that is, the paper itself—was not put in evidence, which is true; and the second is that the questions put to the bankrupt on cross-examination come within the general rule with reference to the protection of the fifth amendment to the Constitution, which is waived when an accused person voluntarily offers himself as a witness, in accordance with Fitzpatrick v. United States, 178 U. S. 304, 315, 20 Sup. Ct. 944, 44 L. Ed. 1078, and Sawyer v. United States, 202 U. S. 150, 165, 26 Sup. Ct. 575, 50 L. Ed. 972. The difference, however, between the two positions is fundamental. The waiver of the constitutional provision concerns merely the personal conduct and condition of the witness. He offers himself as a witness, and therefore puts himself in the position of any other witness so far that he may be examined with reference to anything pertinent to the case and admissible in evidence therein. Of course, the cross-examination of one witness may, for the purpose of testing his character, run out into a line of questions which would not be relevant when put to another witness; but a line of questions of the same class might be put to the second witness and be relevant. Here the issue is not with reference to the conduct and situation of the witness himself, but with reference to the conduct and situation of the prosecuting attorney with regard to something prohibited by the statute, and which could not be testified to by any other witness.

Running this out practically, the essential distinction becomes plainer. The United States say that they proceeded as they did for the purpose of testing the credibility of Jacobs as a witness. In the federal courts, when it is desired to contradict a witness or determine his credibility by putting in proof of a prior contradictory conversation, or a contradictory letter or document of any kind, it is necessary to first interrogate the witness in reference thereto. Of course, this does not apply to the full extent where a party is testifying in his own behalf, because there the letter, document, or conversation can be introduced for the purpose of contradicting the party in interest, and showing that his case is in fact otherwise than as stated by him, and, indeed, independently of any statement he makes on the stand. It is not claimed here, however, that under the statute the examination before the referee could be introduced for either of those purposes. Therefore, as the preliminary examination could not have been followed up in the usual way by the subsequent introduction of the written examination, the cross-examination was not within any rule of practice and was clearly unlawful.

In short, the matter cannot stand like the waiver of the constitutional guaranty because that waiver, as we have said, relates to evidence which would be admissible if it came from some other person as a witness, while here the alleged waiver related to evidence which would not be.

Digitized by Google

Both parties appealed to Burrell v. Montana, 194 U. S. 572, 24 Sup. Ct. 787, 48 L. Ed. 1122, but the issue here was not raised in that case. There no objection was made to the use of the examination, and the only question was whether the person charged with an offense was entirely exempt from prosecution. If any of the expressions in that opinion would have any proper weight here, they would be against the United States.

The underlying philosophy of the statute in question is that, as a matter of justice to the bankrupt, and also for the interests of creditors, he should be encouraged to testify freely in his examination; but he would have no encouragement thereto if, on being prosecuted for an offense, he could not undertake to absolve himself by his own testimony except at the risk of being tripped or embarrassed by what he had previously sworn to. To permit a course of cross-examination in the method here, whether the documentary evidence taken before the referee was produced in the presence of the jury or not, would be simply to permit an evasion of the statute, because to do so would involve the mischief which the statute intended to guard against, in that the witness might be more harassed and prejudiced than he would be if the whole document had been frankly put into the case.

With reference to this issue, the plaintiff in error has not called our attention to the question whether or not the course pursued by the United States might have been prejudical to him. In fact, his propositions with reference to nearly all, if not all, the numerous issues sought to be raised by assigning 41 alleged erroneous rulings are defective in the same particular. The fact seems to be often overlooked that it is not only necessary to show that a ruling was erroneous, but also to point out something which would raise a presumption that the error was, or might have been, prejudical. In this case the prejudicial nature of the error suggests itself from a perusal of the record, and also by the statement of the prosecuting attorney that the method of examination objected to was for the purpose of testing the credibility of the witness. The proofs as to the first count in the indictment, which related to the diamond brooch, consisted very largely, we might say almost entirely, of the testimony of the bankrupt against that of his divorced wife. The charge of the learned judge, which is printed in the record, shows that he regarded these statements as practically irreconcilable, so that the question was one of veracity. What we see of the record satisfies us that such was the fact. Under these circumstances, the credibility of the bankrupt was a matter of the highest importance; and, in our opinion, the method of cross-examination adopted was calculated to place him in a very unfortunate position before the jury, so far as the necessity of balancing his testimony was concerned; and, consequently, we think this was an error which requires that the judgment and the verdict on both counts should be set aside.

With reference to the numerous other alleged errors, it is only with very great difficulty that we could follow them up one by one, and explain our views in regard to each. Where there are so many assigned as we find here, it becomes physically necessary for us to protect our-

Digitized by Google

selves behind our rules. As we have said in other cases, we ordinarily do so unless we perceive something where serious injustice would be done unless we made a special investigation. In this connection we refer especially to the second subparagraph of paragraph 2 of our rule 24 (150 Fed. xxxiii, 79 C. C. A. xxxiii), which requires, not only that the particular pages where questions arise on the introduction of evidence should be pointed out, but that the party complaining should put his finger on the very spot. In this case, for example, with regard to the question of using the examination before the referee, we were referred in gross to pages 59 to 75 of the record, with nothing to assist us as our rules require. The question involved was so serious a one, however, that, in accordance with what we have said as to our exceptional practice, we followed through those pages until we thought we comprehended the positions of the trial court and of the parties therein. Other instances of the kind, however, we pass by except with the most cursory examination. Again we are met by objections in gross to certain questions put by the prosecuting attorney, to the effect that they were leading questions, which, of course, is of no consequence in the Court of Appeals except in very extreme cases, that they were indefinite, that it was impossible to know what was meant by them, that they suggested to the witness an improper inference, and perhaps other subtopics. It cannot be expected that the court will take a consolidated group of objections like this and divide it up, and sift out the record applicable to each branch thereof.

An omission quite general, and not at all peculiar to this case, arises from the fact, to which we have referred, that parties seem to overlook that it is not sufficient to show that a certain ruling was technically erroneous, but that it must also be shown that it was prejudicial, or, at least, that there is a presumption that it was prejudicial within the liberal rules of the Supreme Court in this respect. With all the various matters brought to our attention, we do not recall that there was a single one as to which it was pointed out to us that the alleged error was prejudicial, or that there was any presumption that it was so. Other propositions were submitted without argument, with the mere statement that they were not waived. This does not require us to give any attention to them. Therefore, on the whole, we can only say, as to the various alleged errors which we have not specifically considered, that our impression is that the District Court was correct in its rulings. It may be that, if the same questions should be carefully presented to us again, we might be compelled to take a different view from that which now presents itself; but, on the whole, we feel justified in trusting to the probability, or, at least, to the possibility, that, on a new trial, they may all disappear.

The judgment and the verdict in the District Court are set aside, and the case is remanded to that court for further proceedings in accordance with law.

Digitized by Google

(161 Fed. 702.)

NICKELL v. UNITED STATES.

(Circuit Court of Appeals, Ninth Circuit. February 3, 1908.)

No. 1,891.

1. CONSPIRACY—INDICTMENT.

Where an indictment for conspiracy to induce certain persons to commit perjury in the making of public land entries alleged that the acts were knowingly done, and that defendants knew that the entrymen were applying to purchase the lands on speculation, and not in good faith, to appropriate the same to their exclusive use and benefit, the indictment was not fatally defective for failure in terms to allege that such acts were "willfully" committed under Rev. St. § 1025 (U. S. Comp. St. 1901, p. 720), providing that no indictment found or presented by a grand jury in any District or Circuit Court of the United States shall be deemed insufficient for any defect in matter of form not tending to defendant's prejudice.

[Ed. Note.—For cases in point, see Cent. Dig. vol. 10, Conspiracy, §§ 88; vol. 27, Indictment and Information, §§ 256–264.]

2. PERJURY—FALSE AFFIDAVITS.

Where an entryman on public lands signed and swore to an affidavit that he entered the land for his individual use and benefit, and not for speculation, when in fact, he intended to immediately transfer the land to another under a pre-existing contract, he thereby committed perjury as defined by Rev. St. § 5392 [U. S. Comp. St. 1901, p. 3653].

[Ed. Note.—For cases in point, see Cent. Dig. vol. 39, Perjury, § 23.

For other definitions, see Words and Phrases, vol. 6, pp. 5305–5310; vol. 8, p. 7751.]

3. SAME—"SUBORNATION OF PERJURY."

Procuring entryman to make such false affidavits constituted subornation of perjury as defined by Rev. St. § 5393 [U. S. Comp. St. 1901, p. 3654].

[Ed. Note.—For other definitions, see Words and Phrases, vol. 7, p. 6720.]

4. SAME—VALIDITY OF CONTRACT.

Defendant and others conspired to defraud entrymen on public lands of the location fees, and, in order to induce them to enter the lands, M. represented to them that he was the agent of a fictitious corporation of whom a fictitious person was president, which corporation desired to purchase the land, and would do so from the entrymen, either for a specified amount, or in accordance with an estimate of timber thereon. Pursuant to such conspiracy, defendants induced the entrymen to sign and swear to entry affidavits declaring that the entrymen were purchasing the land for their own benefit, and not for speculation, and that they had no contract or agreement to transfer the same after they had contracted to convey the land to such corporation. *Held* that, since M. would have been personally liable on such contracts under the rule that one who holds himself out as an agent of a nonexisting principal is personally liable, the affidavits were in fact false and constituted perjury, though there was no intention on defendant's part at any time to carry them out or purchase the land.

5. SAME—AFFIDAVITS—STONE AND TIMBER ACT—LANDS AND TIMBER.

Under Stone and Timber Act (Act June 3, 1878, c. 151, § 1, 20 Stat. 89 [U. S. Comp. St. 1901, p. 1545]), making such lands subject to entry as are available chiefly for timber but unfit for cultivation, an entryman having made an affidavit that he sought to purchase the land for his own benefit and not for speculation could not escape punishment for conspiracy on the ground that his pre-existing contract of sale related to the timber only.

Digitized by Google

In Error to the Circuit Court of the United States for the District of Oregon.

The plaintiff in error, Nickell, was indicted jointly with Henry W. Miller, Frank E. Kincart, and Martin G. Hoge in the Circuit Court for the District of Oregon for conspiracy under section 5440 of the Revised Statutes (U. S. Comp. St. 1901, p. 3676). That part of the indictment material to the present inquiry reads as follows: "The grand jurors for the United States of America, inquiring for the district of Oregon, upon their oath present that Henry W. Miller, Frank E. Kincart, Martin G. Hoge, and Charles Nickell, late of the city of Medford, in the district aforesaid, on the thirty-first day of August, in the year of our Lord nineteen hundred and four, at Medford aforesaid, in the said district, unlawfully did conspire, combine, confederate, and agree together, and with divers other persons to the said grand jurors unknown, to commit an offense against the said United States; that is to say, to unlawfully, willfully, and corruptly suborn, instigate, and procure a large number, to wit, one hundred, other persons to commit the offense of perjury in the said district by taking their oaths there, respectively, before competent tribunals, officers, and persons, in cases in which a law of the said United States should authorize an oath to be administered, that they would declare and depose truly that certain declarations and depositions by them to be subscribed were true, and by thereupon, contrary to such oaths, stating and subscribing material matters contained in such declarations and depositions which they should not believe to be true; that is to say, to suborn, instigate, and procure the said persons, respectively, to come in person before such tribunals, officers, and persons, and, after being duly sworn by and before such tribunals, officers, and persons, to state and subscribe under their oaths that certain public lands of the said United States open to entry and purchase under the acts of Congress approved June 3, 1878, and August 4, 1892,[1] and known as 'timber and stone lands,' which those persons would then be applying to enter and purchase in the manner provided by law, were not being purchased by them on speculation, but were being purchased in good faith to be appropriated to the own exclusive use and benefit of those persons, respectively, and that they have not directly or indirectly made any agreement or contract in any way or manner with any other person or persons whomsoever by which the titles which they may acquire from the said United States in such lands shall inure in whole or in part to the benefit of any person except themselves, when in truth and in fact, as each of the said persons would then well know, and as they the said Henry W. Miller, Frank E. Kincart, Martin G. Hoge, and Charles Nickell would then well know, such persons would be applying to purchase such lands on speculation, and not in good faith to appropriate such lands to their own exclusive use and benefit respectively, and would have made agreements and contracts with other persons by which the titles which they should acquire from the said United States in such lands would inure to the benefit of persons except themselves; the matters so to be stated, subscribed, and sworn by the said persons being material matters under the circumstances, and matters which the said persons so to be suborned, instigated, and procured would not believe to be true, and the said tribunals, officers and persons when administering such oaths to those persons, being tribunals, officers, and persons authorized by law of the said United States to administer the same oaths, and the said oaths administered in cases where a law of the said United States would then authorize an oath to be administered." The defendant Miller pleaded guilty, and became a witness for the prosecution. A trial resulted in the conviction of Nickell and Hoge. Nickell was sentenced, and brings the cause to this court upon writ of error.

The transaction disclosed by the bill of exceptions follows: Plaintiff in error was a United States commissioner residing at Medford, Or. Miller and Kincart entered into an agreement between themselves to locate stone and timber claims, and to induce persons to file upon the same. Kincart was to act, and did act, as cruiser, and Miller was to represent himself as the agent of a company to be known as the "Emmitsburg of New Zealand." For the pur-

[1] Act June 3, 1878, c. 151, 20 Stat. 89 (U. S. Comp. St. 1901, p. 1545), as amended by Act August 4, 1892, c. 375, § 2, 27 Stat. 348 (U. S. Comp. St. 1901, p. 1547).

Digitized by Google

pose of inducing persons to make filings, Miller was to tell prospective entrymen that this company desired to secure timber lands in southern Oregon; that, if they would file on claims, the company would at the time of final proof furnish the money required for entry, and would, upon the procurement of the receiver's receipt and the assignment of it, together with a quitclaim deed, pay the respective entrymen the difference between the amount which they had advanced and the aggregate value of the claims, to be arrived at upin the basis of 40 cents per 1,000 feet for timber standing upon such lands. It fully appeared that there was no such company; that the name was assumed; and that one Wilson, represented by Miller as the head of the concern, was a fictitious person, as nonexistent as the company itself. The location fee was fixed at $125 per claim. Thus the matter stood when Miller and Kincart came to the plaintiff in error Nickell for the purpose of enlisting his aid in carrying on the enterprise. Miller explained that he and Kincart were there to locate persons on timber claims, and that he, Miller, was the representative of a company that would buy the lands after final proof had been made. At this point certain negotiations were had regarding the fees of Nickell as commissioner, and concerning the charge to be made for the publication of the necessary notices in a newspaper owned by him. It was agreed that the commissioner was to have $1.50 as fees, and, of the $10 fixed for the publication of notices, $2.50 thereof in every case was to be paid to Miller and Kincart. At this period of the negotiations it was concluded, also, that it was impracticable to secure so large a location fee, and the amount was cut down to $60 under the agreement that the balance was to be paid when final proof was made. Subsequently certain entrymen were charged only $25. The location fees were divided between Miller and Kincart. These two brought with them a blank which was to be used in contracting with entrymen, of which the following is a copy:

"Emmitsburg of New Zealand Certificate.

"Know all men by these presents that we, the Emmitsburg, of New Zealand, desiring to acquire timber and stone lands in southern Oregon, and ——— desiring to exhaust his right and dispose of said land at the time of final proof:

"Now, therefore, the Emmitsburg of New Zealand, agrees with ——— as follows, to wit:

"That said ——— locate the ——— quarter of section ——— township ——— south, range ——— west, Willamette Meridian, and at day of final proof on said land, we, the Emmitsburg, of New Zealand, will furnish four hundred dollars and take said ——— note, and upon the receiver issuing a certificate for said land, and its being assigned to the Emmitsburg, of New Zealand, or its agent, together with a quitclaim deed, we, the Emmitsburg, of New Zealand, will pay said ——— eight hundred dollars in addition to money heretofore paid. This agreement to be signed by the ——— and countersigned by company's agent or representative and deposited in escrow with ——— until day of final proof.

"In witness whereof we hereunto set our hands this the ——— day of ———, A. D. 1902.

"————————————, Locator.
"Emmitsburg of New Zealand,
"Per ————————, Representative."

It was proposed by Miller to modify this contract, and for that purpose it was submitted to Nickell, who carried on a job printing office in connection with his newspaper. Accordingly blank forms were printed in his establishment which omitted these words in the first blank form, "Will pay said ——— eight hundred dollars in addition to money heretofore paid," and, in lieu thereof, these were inserted after the description: "Which is estimated at ——— million feet merchantable timber," and "will pay said ——— in all not to exceed forty cents per thousand, per estimate." Plaintiff in error expressed his doubts as to the feasibility of the project which had been devised by Kincart and Miller, and to which he had thus become a party, basing his doubts upon the fact, as he expressed it, that the same scheme had been worked in that community before. In order to arouse the cupidity of persons who

Digitized by Google

had filings in contemplation, Miller informed them that no locations would be made for those not desiring to dispose of the land, and the reason assigned by him at the trial for making this statement was that it would make them "bite a little better." He also testified: "As a matter of fact, we did not intend to buy the timber at final proof, or at all. We had no money to buy with." Numerous applications and affidavits were made pursuant to this arrangement before the plaintiff in error as commissioner, and forwarded by him to the land office, where they were duly filed and entered of record, and these contracts, either the original or as modified, were executed by the several entrymen immediately thereafter. They were retained by Miller, and at once destroyed by him, but none of the persons who filed ever made or offered to make final entry.

The trial court instructed the jury in part as follows: "I repeat, an agreement, as the word 'agreement' is used, need not be in writing. It need not be of sufficient formality or of a nature to be enforced in a court. It is enough if it is proved beyond a reasonable doubt that in some way the minds of the applicant and some other person have met definitely, understandingly, and that there is a mutual consent upon the point that, when the applicant may acquire title to the land from the United States, it shall inure to the benefit of such other person for a consideration; that is, that in truth and in fact, the applicant is really to acquire the land for the use and benefit of another. And any words or any acts and words manifesting this mutual consent of the minds of the parties are sufficient to constitute a contract or agreement. * * * If the agreement to convey exists and is understood between the parties, the law does not tolerate evasion by calling such an agreement a 'certificate' or 'option.' Nor, if the agreement actually exists, can the law be evaded by an endeavor to separate title to the timber upon the land from title to the land itself. On the other hand, a person qualified under the law has a right to enter lands under the provisions of the timber and stone act, even though he considers prior to the time of making his sworn statement and his final proof a sale of it as soon as he can after he makes his final proof, and obtains the usual receiver's receipt. * * * But the statute does denounce a prior agreement, the acting for another in the purchase from the government of the United States. * * * You, and you alone, must ascertain whether the evidence shows beyond a reasonable doubt that Hoge and Nickell, or either of them, knowingly and intentionally entered into an agreement, or knowingly formed a part of a combination with Kincart and Miller, or either of them, to induce or procure persons to apply to enter and purchase public lands as alleged, or some part of the public lands as charged in the indictment as lands subject to entry under the timber and stone act, after having come to an agreement or understanding with said persons that they would convey the title which they might acquire to Miller, or the Emmitsburg of New Zealand, or some one represented by Miller."

Thomas O'Day, for plaintiff in error.

William C. Bristol and Francis J. Heney, for defendant in error.

Before GILBERT and ROSS, Circuit Judges, and WHITSON, District Judge.

WHITSON, District Judge (after stating the facts as above). While the plaintiff in error has made numerous assignments, they either directly present or incidentally involve two principal propositions: First. The sufficiency of the indictment. Second. The nature and character of the contract or agreement which is inhibited by the statute, and whether plaintiff in error was brought within its provisions.

First, then, as to the indictment: The argument is that the pleader has omitted to charge that the acts complained of were willfully done. This is based upon the assumption, rightly made, that it must so appear by appropriate averment. Assuming for the present discussion

Digitized by Google

without holding that the words "unlawfully, willfully, and corruptly" first appearing in the indictment cannot relate to the subsequent allegations in relation to the nature of the oaths taken for want of explicit reference, it does appear that the acts were knowingly done, for it is alleged:

"When, in truth and in fact, as each of the said persons would then well know, and as they, the said Henry W. Miller, Frank E. Kincart, Martin G. Hoge, and Charles Nickell, would then well know, such persons would be applying to purchase such lands on speculation, and not in good faith to appropriate such lands to their own exclusive use and benefit, respectively, and would have made agreements and contracts with other persons by which the titles which they should acquire from the said United States in such lands would inure to the benefit of persons except themselves."

We think the distinction which counsel makes is a technical refinement which cannot prevail under the liberal provisions of section 1025 of the Revised Statutes (U. S. Comp. St. 1901, p. 720). If the defendants knew that these affidavits would be false, and knew that the entrymen would have made contracts for the conveyance of the lands to be acquired by them, and having this knowledge nevertheless procured the making of them, there can be but one conclusion, and that is that they willfully, which is but another name for intentionally, entered into the conspiracy charged. While matters of substance are as essential now as before the passage of the statute, and of necessity must always remain so, we take it that its enactment was intended to have substantially the same effect as those of many of the states, which provide that an indictment which will enable a person of common understanding to know what is intended is sufficient.

In Van Gesner v. United States, 153 Fed. 54, 82 C. C. A. 188, it was observed by this court:

"When the facts alleged necessarily import such willfulness, the failure to use the word itself is not fatal. Such failure, under such circumstances, would not be fatal even at common law."

The indictment in this case falls within the rule there discussed.

The second point presents a question of more difficulty. Section 2 of the act of June 3, 1878 (20 Stat. 89, c. 151 [U. S. Comp. St. 1901, p. 1545]), requires the entryman at the time of making his application to make oath that he has not made any agreement or contract in any way or manner, directly or indirectly, with any person or persons, by which the title shall inure to the benefit of any person except himself. That it was intended to meet the evasions which would be resorted to from time to time is quite manifest. Schemes, devices, and subterfuges which ingenuity could invent, and of which this case furnishes a striking example, were in view equally with formal contracts. We are precluded from holding otherwise by the comprehensive language of the statute; and to sustain the contention of plaintiff in error in that regard would be equivalent to saying that its purpose can be entirely defeated by secret understandings and ingenious circumventions. Boren v. United States, 144 Fed. 801, 804, 75 C. C. A. 531. With this construction in mind, the particular scheme which was conceived in this case will be examined. The certificates,

Digitized by Google

so called, were, of course, devices. Miller objected to giving the name of the responsible head of his company to one of the prospective entrymen, but, on being pressed, he did give a name, concerning which he testified as follows:

"I gave him the name of J. D. Wilson, of Minneapolis, Minn., as the head man. That was the first name that happened to come to my mind. He had nothing to do with the company. I do not know that there was any such individual."

Again he testified:

"I represented no company at that time. The company was only on paper. It was a name assumed for the purpose of carrying out our scheme."

The case must therefore rest upon the undisputed fact that there was no such company as the Emmitsburg of New Zealand. That company was fictitious, and Wilson as its manager had no existence. There was, then, no contract or agreement with any person to convey, or whereby the land might inure in whole or in part to the benefit of such company. It was not the purpose to supply money with which to make the entries nor to acquire title. The scheme was to work the entrymen out of the location fees; to defraud them. Here the matter was to end, and did end. But the entrymen and the defendants, other than the plaintiff in error, and he, giving due effect to the verdict of the jury, thought there was a contract to convey, and therefore it is that in this regard the affidavits contained averments which the entrymen did not believe to be true. This was perjury. Section 5392, Rev. St. (U. S. Comp. St. 1901, p. 3653). Procuring the making of such affidavits was subornation of perjury. Section 5393, Rev. St. (U. S. Comp. St. 1901, p. 3654). The case was submitted to the jury upon the theory that it might find from the evidence agreements as charged in the indictment by which the lands to be acquired were to be conveyed, or might inure to the benefit of some person other than the entrymen. Miller, Kincart, and the plaintiff in error intended that the false affidavits should be made, and the plaintiff in error supposed that there were agreements in fact as well as in form that the lands were to be entered and conveyed to Miller's company. In addition to the certificates which were signed, there was evidence to establish that, at least as to some of the entrymen, there were oral agreements made with Miller to convey to this company; but, bearing in mind that the entrymen intended to defraud the government of these lands, and that the plaintiff in error intended to, and did give his aid to what he supposed was a deliberate attempt to do so, the case must turn upon whether there were agreements or such an arrangement as would result in the lands inuring to the benefit of some person other than the persons who were making entries of them. If these agreements had been made by Miller concerning lands which might properly be the subject of contract, he could have been held personally responsible. They would have been enforceable as against him under the rule that one who holds himself out as the agent of a principal who has no existence is personally liable. Patrick v. Bowman, 149 U. S. 421, 13 Sup. Ct. 866, 37 L. Ed. 790; Paine v. Loeb, 96 Fed. 167, 37 C. C. A. 434; Second Kent's Commentaries, 630;

Digitized by Google

281.

Remembering, now, the comprehensive provisions of th as prohibiting all manner of devices, we find that the agree with Miller, and not with his company, and while he, as he not intend to comply on his part, yet the vice prohibited is th of it, and the conspiracy charged is having suborned these to swear falsely that no such agreement was made when was. The charge assumed that there might have been a c convey to the Emmitsburg of New Zealand, it is true, but the j not have been thereby misled, for, if an agreement with Mil have bound him personally under such conditions, the lawf tions of a contract being present, it would make no differenc the contract was made with Miller's company or with him. T nothing in the evidence which in any way could tend to co jury. There was in this regard but one transaction, and presentation of the case upon the theory that there may hav contract made with the Emmitsburg of New Zealand was acc also by the assumption that the jury might from the evidence the contracts were with Miller, and, inasmuch as there was else before the jury except this transaction, there could have prejudice.

The conclusion reached by the jury was correct, even thoug not have been told in so many words that Miller would be re if his company had no actual existence. This it appears t assumed as a proposition of law without explaining it to It could not have in any way influenced the verdict. It was submitting two distinct transactions, from which different resu flow, for the consideration of the jury, leaving them to find th the other according to their judgment of the evidence.

The plaintiff in error relies upon the position that whatever ment was made related to the timber upon the land, and not to itself. Section 1 of the act makes such lands subject to ent "valuable chiefly for timber, but unfit for cultivation." It contrary to the spirit of this legislation to declare that an may contract to sell that which gives the land its only value, a by escape punishment under so technical a contention. Th is a part of the land, and one who thus seeks to avoid the pl and even letter of the law cannot complain of penalties inflic sides, the conspiracy here was to acquire the lands.

Finding no prejudicial error in the record, the judgmen affirmed.

Digitized by Google

B. ROTH TOOL CO. v. NEW AMSTERDAM CASUALTY CO.

(Circuit Court of Appeals, Eighth Circuit. March 31, 1908.)

No. 2,633.

1. INDEMNITY—RECOVERY OVER—CONCLUSIVENESS OF JUDGMENT—EXTENT OF ESTOPPEL—SCOPE OF ADJUDICATION.

When one who has a right to recover over is sued, the judgment regularly rendered against him is conclusive on the indemnitor, provided notice of the suit be given to the latter and full opportunity afforded him to defend, but, if the liability over is not as broad as the original liability, plaintiff, in the suit to recover over, if he relies on the adjudication made in the former case, must show that the very ground of liability against the indemnitor was found to exist and was necessarily adjudicated in the original suit, as the estoppel created by the first judgment cannot extend beyond the questions necessarily determined by it.

[Ed. Note.—For cases in point, see Cent. Dig. vol. 27, Indemnity, § 41.]

2. INSURANCE—EMPLOYER'S LIABILITY—CONCLUSIVENESS AS AGAINST INSURER OF JUDGMENT AGAINST INSURED—NOTICE OF SUIT—REFUSAL TO DEFEND.

Where an employer's liability policy contained a stipulation requiring notice of suit against the assured to recover damages by an employé to be immediately given to the insurer, and the latter expressly agreed to defend or settle it or otherwise satisfy the assured, the insurer's refusal to make a defense, after notice, because it disclaimed any liability for damages occasioned to the plaintiff, did not relieve the insurer from the conclusiveness of the judgment rendered in such action.

3. SAME—CONCLUSIVENESS OF JUDGMENT AS AGAINST INSURED—MUTUALITY OF ESTOPPEL.

Where an employer, on being sued for injury to an employé, vouched in an insurer on an employer's liability policy, which refused to defend because of alleged nonliability, the estoppel of the judgment recovered against the employer in such action operated mutually against both parties.

4. JUDGMENT—PLEADING AND EVIDENCE AS ESTOPPEL—IDENTITY OF ISSUES—EVIDENCE.

On the question whether the issues in a prior action by a servant against his master for injuries, in which judgment was rendered for the servant, were the same as those in an action by the master against an employer's liability company, to recover over against the latter, in which the judgment against the master was claimed to be res judicata, the pleadings, instructions, and verdict in the prior action were admissible to determine what was actually tried therein.

[Ed. Note.—For cases in point, see Cent. Dig. vol. 30, Judgment, §§ 1823, 1823½.]

5. INSURANCE—EMPLOYER'S LIABILITY—PROMISSORY WARRANTY IN POLICY—USE OF "EXPLOSIVE."

Where a large metal tube filled with various metals and materials of an explosive and dangerous nature was exposed to the heat of a furnace on plaintiff's premises and actually exploded and injured an employé, such tube and its contents constituted an "explosive," within a warranty in an employer's liability policy insuring plaintiff that no explosives should be used on the premises.

[Ed. Note.—For other definitions, see Words and Phrases, vol. 3, p. 2600.]

6. SAME—CONCLUSIVENESS AGAINST INSURED OF JUDGMENT FOR EMPLOYÉ—GROUND OF RECOVERY.

Plaintiff permitted H. to use its heating furnace for experiments. H. filled a metal tube with other metals and explosive substances, sealed the

Digitized by Google

tube, and placed the same in the furnace, where it was subjected to a hot fire. It exploded, injuring one of plaintiff's employés, who recovered a judgment against plaintiff on an allegation of negligence, in that plaintiff carelessly permitted such tube to be filled with metals of an explosive and dangerous nature and placed in a heating furnace, which caused it to explode, resulting in the injuries complained of. *Held*, that a judgment in favor of the servant on such issue was conclusive against plaintiff's right to recover over against an employer's liability company on a policy containing a warranty that plaintiff should not permit the use of explosives on the premises, which action the liability company defended on the ground of plaintiff's breach of such warranty.

In Error to the Circuit Court of the United States for the Eastern District of Missouri.

Ford W. Thompson (W. B. Thompson and Edward L. Gottschalk, on the brief), for plaintiff in error.

Lon O. Hocker (C. P. Ellerbe, L. R. Brokaw, and Jones, Jones & Davis, on the brief), for defendant in error.

Before HOOK and ADAMS, Circuit Judges, and CARLAND, District Judge.

ADAMS, Circuit Judge. The casualty company issued its policy indemnifying the tool company against loss from common-law and statutory liability for damages on account of bodily injuries sustained by any of its employés while on duty. James M. Cameron, an employé, sued the tool company for damages sustained by him while in its employment and recovered a judgment for $3,500, which the tool company was required to pay and did pay. Afterwards the tool company brought the present action against the casualty company on its policy to recover the amount so paid to Cameron. The casualty company filed its answer, alleging that the assured had failed to keep and observe a promissory warranty which formed a part of the contract of indemnity, in this: that it permitted to be used on its premises certain explosives in violation of a stipulation contained in the policy that no explosives should be used on the premises. In its answer it pleaded the following facts as a breach of the warranty: That the assured, while carrying on a machine and blacksmith shop, permitted one Howe to make use of its tools and furnaces for the purpose of carrying on dangerous and hazardous investigations and experiments, and particularly to place in one of plaintiff's furnaces a certain iron tube filled with substances which were highly explosive and dangerous to life and limb when brought into contact with heat; that an explosion followed which caused the injury to Cameron. Defendant for further answer alleged that in the suit which Cameron brought against the assured the question whether Cameron was injured by the use of explosives on the premises was adjudicated and conclusively settled against the assured. The contract of indemnity sued on required the assured upon the occasion of any accident to give immediate notice thereof to the casualty company, and, in case of suit against the assured, the latter was required to immediately deliver to the casualty company a copy of the petition and summons, and the latter agreed to make the defense to the suit at its own cost or settle the

Digitized by Google

same, provided it did not elect to pay the limit of liability fixed in the contract. Pursuant to the obligation of the contract, the assured gave the required notice, and delivered a copy of the petition and summons to the casualty company. The casualty company, disclaiming any liability for the damages occasioned to Cameron, refused to assume the defense of that suit.

To sustain the issue of res adjudicata joined in this suit the casualty company offered in evidence the amended petition, the answer, the instructions of the court to the jury, and the judgment rendered in that suit. From this testimony offered and received it appears that Cameron charged in his petition as the act of negligence which caused his injury that the tool company carelessly caused and permitted to be constructed a large metal tube "and caused, and permitted the same to be filled with various metals and materials of an explosive and dangerous nature," and, when so filled, to be placed in a heating furnace in the machine shop of the defendant, and that as a result thereof the tube and contents exploded and injured him; that the tool company joined issue on that allegation of negligence; that the trial court at the trial instructed the jury as follows:

"If they find and believe from the evidence that on or about April 7, 1903, the defendant company permitted and invited one Howe to enter upon its premises where the plaintiff [Cameron] was working as a blacksmith in the service of the defendant, and to place within its furnace thereon a certain tube closed and sealed and filled with materials of an explosive nature and that said furnace at the time contained a hot fire, and if the jury further believe that the defendant knew or by the exercise of ordinary care could and should have known that said tube so closed and sealed, and so filled was likely in the natural course of events to explode when so placed in said furnace containing a hot fire, and if the jury further believe that said Howe upon such permission and invitation did place said tube so closed and sealed and so filled in said furnace then containing a hot fire, and that in consequence thereof said tube did explode, and that plaintiff as a direct and immediate consequence of said explosion and without any fault or negligence on his part contributing thereto was injured—then the jury will find for the plaintiff,"

—and that the converse of this proposition was given to the jury in favor of the defendant.

On these pleadings and instructions a verdict was found in favor of Cameron and against the tool company for $3,500, upon which judgment was finally entered and satisfied by the tool company. It is this judgment which is pleaded as res adjudicata of the issue involved in the present case, whether the tool company, the assured, committed a breach of its warranty not to use explosives on its premises. The Circuit Court, on a view of the pleadings, instructions, verdict, and judgment in the former case held that that judgment was conclusive as an estoppel against the plaintiff in this case, and directed a verdict for the defendant. The present proceeding in error challenges that action.

It is a well-settled general rule that, when one who has a right to recover over is sued, the judgment regularly rendered against him is conclusive upon the person liable over, provided notice of the suit be given to the latter and full opportunity afforded him to make defense. But, when the liability over is not as broad as the original lia-

Digitized by Google

bility, the plaintiff in the suit to recover over if he relies on the adjudication made in the former case must show that the very ground of liability against the indemnitor was found to exist and was necessarily adjudicated in the original suit. The estoppel created by the first judgment cannot extend beyond the questions necessarily determined by it. Washington Gas Co. v. Dist. of Columbia, 161 U. S. 316, 16 Sup. Ct. 564, 40 L. Ed. 712; City of St. Joseph v. Union Ry. Co., 116 Mo. 636, 22 S. W. 794, 38 Am. St. Rep. 626. The contract of indemnity sued on in this case contains an express stipulation requiring notice of suit against the assured to recover damages by an employé to be immediately given to the casualty company and the latter company expressly agreed to defend or settle it or otherwise satisfy the assured. The refusal by the casualty company to make the defense makes no difference in the conclusiveness of the judgment rendered in the case.

Mr. Justice White in Washington Gas Co. v. Dist. of Columbia, supra, quoted with approval the language of other judges:

> "When a person is responsible over to another, either by operation of law or by express contract, and he is duly notified of the pendency of the suit, and requested to take upon himself the defense of it, he is no longer regarded as a stranger, because he had the right to appear and defend the action, and has the same means and advantages of controverting the claim as if he were the real and nominal party upon the record. In every such case, if due notice is given to such person, the judgment, if obtained without fraud or collusion, will be conclusive against him, whether he has appeared or not."

The casualty company was therefore concluded by the judgment rendered in the original case, provided the issue upon which the judgment was rendered was the same as that tendered in this case. The estoppel of such a judgment operates mutually. If the assured by vouching in the insurer concluded the latter by the judgment rendered in Cameron's case, by the most obvious and natural justice it concluded itself likewise. We find ourselves, therefore, limited to a consideration of the identity of issues in the original case and the present one. If the issue upon which the original judgment was rendered was the same as that presented in this case, that judgment concludes the plaintiff in this case, and no error was committed in directing a verdict for the defendant.

The stress of the argument of learned counsel for the tool company is that it does not appear that the issues presented in the two cases are the same. After a careful consideration of the pleadings, instructions, verdict, and judgment in the former case in comparison with the single issue presented in this case, we entertain no doubt of the substantial identity of the issues presented in the cases. Brushing aside unnecessary verbiage, the issue in this case is whether the tool company committed a breach of its warranty that it would not use explosives on its premises. Whether it was using such an explosive at the time Cameron was injured was the very issue tendered, met, and tried in the former suit. This clearly appears by the pleadings, the instructions to the jury, and the verdict in that case. These were properly introduced in evidence to determine what was actually tried. Russell v. Place, 94 U. S. 606, 24 L. Ed. 214; De Sollar v. Hanscome, 158

Digitized by Google

U. S. 216, 221, 15 Sup. Ct. 816, 39 L. Ed. 956; Delaware, L. & W. R. Co. v. Kutter, 77 C. C. A. 315, 147 Fed. 51; City of St. Joseph v. Union Ry. Co., supra. This evidence disclosed that the issue tried was whether Howe was permitted to make use of the furnace and premises of the tool company at the time Cameron was injured to experiment with an explosive and whether he did so. The verdict and judgment rendered settled that issue between Cameron and the tool company in the affirmative, and that is the very issue involved in this case. It is futile to split hairs as to the technical meaning of the word "explosive." It was determined in the former case that the tool company had on its premises at the time Cameron was injured "a large metal tube filled with various metals and materials of an explosive and dangerous nature"; that the same was exposed to the heat of a furnace on the premises and actually exploded and injured Cameron. Without considering what else may be an explosive, the tube with its contents just described was clearly one within the obvious meaning of the policy in suit. It consisted of physical substances which were liable to explode and injure the employés of the tool company. This was the very agency for harm and damage which the casualty company did not insure against; and against which it exacted a warranty from the assured.

We find no occasion to dwell on the contention of the casualty company that Howe was not on the pay roll of the assured or that his agency in producing the injury to Cameron was such as exonerated the insurer from liability under the terms of its policy, or any of the other questions debated by counsel. The assured and insurer are both concluded by the judgment rendered in the first case on the vital issue involved in this case: Whether the assured committed a breach of its warranty.

We find no error in the proceedings in the Circuit Court, and its judgment is accordingly affirmed.

(161 Fed. 713.)

WOLLINGTON v. MISSOURI, K. & T. RY. CO.

(Circuit Court of Appeals, Eighth Circuit. April 21, 1908.)

No. 2,666.

MASTER AND SERVANT—INJURIES TO SERVANT—DEFECTIVE APPLIANCES—ASSUMED RISK.

Plaintiff, a servant, was injured by the fall of a derrick, the mast of which was insecurely bolted to the bedplate. Such defect was plainly observable, and plaintiff, who had worked with the derrick for two or three months, had actual knowledge thereof, and that the derrick had been condemned by defendant as unsafe, after which plaintiff had participated in its restoration to use in its defective condition and continued to work with it without objection until it fell. *Held*, that plaintiff assumed the risk of injury therefrom.

[Ed. Note.—For cases in point, see Cent. Dig. vol. 34, Master and Servant, §§ 574–600.

Assumption of risk incident to employment, see note to Chesapeake & O. R. Co. v. Hennessey, 38 C. C. A. 314.]

Digitized by Google

In Error to the Circuit Court of the United States for the Western District of Missouri.

C. C. Lawson and Silver & Brown, for plaintiff in error.

Geo. P. B. Jackson, for defendant in error.

Before SANBORN and ADAMS, Circuit Judges.

ADAMS, Circuit Judge. This was an action for damages occasioned by defendant's alleged negligence in furnishing a derrick for plaintiff and his co-employés to work with. It is charged that the mast of the derrick was insecurely bolted to the bedplate on which it rested, that in other respects the derrick was not sufficiently strong to handle the heavy weights required of it and that as a result it fell and injured the plaintiff. The evidence is clear and uncontradicted that the alleged defects were plainly observable by every one, and that plaintiff, who had worked with the derrick for two or three months, actually knew of them. He was aware that the derrick had been condemned by defendant at one time as unfit and unsafe for use, participated in its restoration to use in its defective condition, and afterwards continued to work with it without objection or complaint until it fell as a result of that condition and injured him. These facts present a clear case of assumption of risk by the servant. Kirkpatrick v. St. Louis & San Francisco Railroad Co., 87 C. C. A. 35, 159 Fed. 855, recently decided.

For the purpose of this opinion it is assumed that the negligence charged against the defendant was fully established. Accordingly, the exclusion of some expert testimony, offered by plaintiff to establish that negligence, which is assigned for error, whether right or wrong, was without prejudice to plaintiff. Conceding defendant's negligence as charged, plaintiff, with full knowledge thereof, assumed the risk of the danger resulting therefrom.

The judgment is affirmed.

SANBORN, Circuit Judge, concurs on the grounds that the plaintiff assumed the risk and that the expert testimony offered was rightly excluded.

(161 Fed. 714.)

BLOUNT v. AMERICAN LEAD & BARYTA CO.

(Circuit Court of Appeals, Eighth Circuit. April 17, 1908.)

No. 2,670.

ATTACHMENT—VACATION—BOND.

Rev. St. Mo. 1899, § 413 (Ann. St. 1906, p. 501), provides that attachments may be dissolved on motion on defendant's behalf at any time before final judgment when defendant appears and pleads to the action and gives bond conditioned that the property, effects, and credits shall be forthcoming and abide the judgment rendered, or when the defendant shall appear and plead and give a bond conditioned that defendant will pay to plaintiff the amount which may be adjudged in plaintiff's favor on or before the first day of the next term after judgment; and section 414 declares that when any attachment shall be dissolved all proceedings touching the property and effects attached, and the garnishee summoned, shall be vacated, and the suit shall proceed as if commenced by summons only. *Held* that, where an attachment was dissolved on the

Digitized by Google

giving of a forthcoming bond, defendant could not thereafter join issue on and demand a trial of the grounds originally alleged for the attachment; and this, though plaintiff took leave to amend his grounds of attachment after the attachment had been dissolved.

In Error to the Circuit Court of the United States for the Eastern District of Missouri.

Edward D'Arcy (E. M. Dearing, on the brief), for plaintiff in error.

Richard S. Culbreth (Carter, Collins & Jones, on the brief), for defendant in error.

Before SANBORN and ADAMS, Circuit Judges, and PHILIPS, District Judge.

ADAMS, Circuit Judge. Plaintiff, Blount, instituted his action at law against the Baryta Company to recover an amount of money due him on open account. Summons was duly issued, and the defendant appeared and pleaded to the action by filing a general denial of liability. Later plaintiff sued out a writ of attachment in aid of his suit and caused certain personal property to be seized thereunder. In due time defendant, having already appeared and pleaded to the action, executed and delivered to plaintiff a good and sufficient bond, approved by the court, in double the value of the property attached, conditioned that the property should be forthcoming to abide the judgment which might be rendered in the case, and thereupon moved that the attachment be dissolved. This motion was sustained by the court, and a formal order entered "that the attachment issued in said cause be, and is hereby, dissolved." The cause came on for trial, and the court, against the objection and exception of plaintiff ordered that the issue raised by the plea in abatement be first tried. This was done, and resulted in a verdict by direction of the court in favor of the defendant, whereupon another formal order was entered "that the attachment in this cause be, and the same is hereby, dissolved and vacated at the costs of said plaintiff." Immediately thereafter the cause went to trial on the merits, resulting in a verdict and general judgment for the plaintiff on his original cause of action. This writ of error challenges the correctness of the order below requiring plaintiff to proceed to a trial on the plea in abatement and the judgment pronounced thereon.

Sections 413 and 414 of the Revised Statutes of Missouri of 1899 (Ann. St. 1906, p. 501) are as follows:

"Sec. 413. Attachments in courts of record or before justices of the peace may be dissolved on motion made in behalf of the defendant at any time before final judgment in the following cases: * * * Second. When the defendant shall appear and plead to the action and give bond to the plaintiff with good and sufficient security to be approved by the court in double the amount of the property, effects and credits attached, conditioned that such property, effects and credits shall be forthcoming and abide the judgment which shall be rendered in the cause when and where the court shall direct. Third. When the defendant shall appear and plead to the action and give like bond and security in a sum sufficient to satisfy the amount sworn to in behalf of the plaintiff with interest and costs of suit conditioned that the defendant shall pay to plaintiff the amount which may be adjudged in favor

Digitized by Google

of plaintiff, interest and all costs of suit on or before the first day of the next term after that at which judgment shall be rendered.

"Sec. 414. When any attachment shall be dissolved all proceedings touching the property and effects attached, and the garnishee summoned, shall be vacated, and the suit shall proceed as if it had been commenced by summons only."

These sections of the statute present two ways of securing a dissolution of an attachment without a trial of the issue raised by a plea in abatement. Both of them are concessions to a defendant whose property is attached, and are to be availed of by him at his option and on the conditions prescribed. If the property attached is of less value than the amount sued for, he can and probably would avail himself of the first-mentioned provision, and secure a dissolution of the attachment by giving a bond conditioned for the forthcoming of that property only to abide the judgment which might be ultimately rendered in the case. If, on the other hand, the property attached equals in value the amount sued for, he can and probably would secure the dissolution by resorting to the second-mentioned method, and give a bond conditioned for the payment of the entire judgment which might ultimately be rendered against him. Whether one bond or the other is given the result is the same. The attachment is dissolved, and all proceedings touching the property and effects attached are vacated. The legislative intent seems perfectly clear, namely, to enable a defendant in an attachment suit to secure a dissolution of the attachment and convert the extraordinary suit by attachment into a simple and usual one by summons only. This intent is expressed in three ways, by providing, first, for a direct judgment that the attachment be dissolved; second, that all proceedings touching the property and effects attached be vacated; and, third, that the suit shall thereafter proceed as if instituted by summons only.

Defendant secured the advantage of the possession and use of the property attached pending the litigation by accepting the conditions which the law imposed of entering a general appearance to the cause, permitting the same to proceed as if instituted by summons only, and subjecting itself to the possibility of a general judgment in favor of plaintiff. Manifestly defendant cannot now be permitted to join issue upon and demand a trial of the grounds originally alleged for the attachment. That would violate the condition imposed by law that the case should proceed as if instituted by summons only, and would subject plaintiff to the consequences of defeat on an abandoned issue. All proceedings in relation to the attachment were superseded by the giving of the bond and securing a dissolution of the attachment by the defendant. The Supreme Court and Court of Appeals of Missouri have in effect so held. Payne v. Snell, 3 Mo. 409; State, to Use, v. Fargo, 151 Mo. 280, 52 S. W. 199; Haber v. Klauberg, 3 Mo. App. 342, and cases cited.

The Fargo Case relates to the dissolution of an attachment by the giving of a bond under the third subdivision of section 413, conditioned for the payment of the judgment which might ultimately be recovered; but, as all the incidents of such a dissolution are by statute made equally applicable to a dissolution by giving a forthcoming

Digitized by Google

bond, we think the doctrine of that case is clearly applicable to this. The only order or judgment permissible when an attachment is dissolved as a result of a hearing upon the plea in abatement is that the attachment "be dissolved." The futility of such a hearing is apparent, when a judgment of exactly that kind has already been rendered.

Some point is made that plaintiff took leave to amend his grounds for attachment after the attachment itself had been dissolved. This does not impress us seriously. It is an instance of prudence which the result below rendered commendable. That act of abundant precaution cannot operate to reinstate an issue once definitely and finally disposed of. The jurisdiction of the court over that issue had been exhausted. The foregoing conclusion renders consideration of the other errors assigned unnecessary. It results that the learned trial court erred in compelling the plaintiff to go to trial on the issue tendered by the plea in abatement. The only issue for trial was on the merits of the cause.

The judgment below dissolving the attachment as a result of the hearing on the plea in abatement is therefore reversed, and the cause remanded to the court below, with directions to take proper proceedings to enforce the payment of the judgment rendered on the merits.

(161 Fed. 717.)

MILBURN v. FEDERAL SUGAR REFINING CO. OF YONKERS.

(Circuit Court of Appeals, Second Circuit. May 5, 1908.)

(No. 233.)

SHIPPING—DELAY IN DISCHARGING—FAULT OF VESSEL.

Delay in discharging through default of the vessel does not entitle the charterer or consignee to damages, in the absence of a contract for delivery by a particular day, but simply extends the time within which the discharge may be made without liability of the charterer or consignee for demurrage.

[Ed. Note.—For cases in point, see Cent. Dig. vol. 44, Shipping, § 436. Demurrage, see notes to Harrison v. Smith, 14 C. C. A. 657; Randall v. Sprague, 21 C. C. A. 337; Hagerman v. Norton, 46 C. C. A. 4.]

Appeal from the District Court of the United States for the Southern District of New York.

For opinion below, see 155 Fed. 368.

Convers & Kirlin (Charles R. Hickox and Russell T. Mount, of counsel), for appellant.

E. A. Bigelow, for appellee.

Before LACOMBE, COXE, and WARD, Circuit Judges.

WARD, Circuit Judge. This is a libel for unpaid freight to the amount of $1,000, against which the respondents allege a set-off amounting to $951.27, paying the balance into court. The respondents are the holders of the bill of lading of the entire cargo of sugar laden aboard the steamship Heathdene. The charter party, dated May 23, 1905, contains the following clause;

Digitized by Google

"Thirteen weather working days are to be allowed the said merchants for loading the said steamer at loading places and waiting for orders at the ports of call, and the cargo to be taken out according to custom of the place at the port of discharge, always afloat. * * * If required by charterers, 15 days on demurrage over and above the said laying days are to be allowed at four pence sterling per net register ton per running day. Should the vessel be detained by causes over which the charterers have no control, viz., quarantine, ice, hurricanes, blockade, clearing of the steamer after the last cargo is taken over, etc., no demurrage is to be charged and lay days not to count, and time used for shifting ports not to be counted in demurrage."

The bill of lading contains the following clause:

"* * * to discharge at a port as per charter party dated London, 23d May, 1905. * * * To be delivered in like good order and condition at the ordered port of discharge unto order or to order's assigns; he or they paying freight for the said goods and all conditions as per charter party above referred to."

We read the charter as fixing no lay days or demurrage for discharging; the only provision as to the discharge relating to the method, viz.:

"* * * The cargo to be taken out according to custom of the place at the port of discharge, always afloat."

It will make no difference whether we are right or wrong about this, because no testimony has been offered as to any customary rate of discharge in this port. A vessel, having brought a cargo to destination with no stipulation as to lay days or demurrage, performs her contract by discharging it in a safe place, if no one appears to claim it after a reasonable time. If a charterer or a consignee claims the cargo, the duty lies upon him to receive it within a reasonable time, and for any detention thereafter for any cause except the vessel's fault he must pay damages in the nature of demurrage. The obligation as to the time of discharge has always been treated as entirely on the charterer or consignee, probably because a vessel is always supposed to be anxious to deliver as soon as possible, so as to get a new freight. If the charterer or consignee receives the cargo in a reasonable time, he will be liable for nothing more than the original freight. If he exceeds that time, he will be liable for an extended freight in the form of damages in the nature of demurrage. The consequence of a delay in discharging due to the vessel's fault is simply to extend the time pro tanto within which the charterer or consignee may receive it, paying only the original freight.

In this case the court below has found the vessel did delay the discharge by failing to give the winches a sufficient supply of steam. As a consequence of this default the court charged her with the amount of $846.27 demurrage paid by the consignee to another vessel waiting for the berth occupied by the Heathdene, and the sum of $105, representing time of consignee's stevedores wasted by the slow discharge. These were in our opinion not the natural and proximate results of the vessel's delay in discharging; whereas the extension of the consignee's time to receive the cargo without liability to pay demurrage was. That obligations to receive the cargo, expressed or implied, are obligations of the charterer or consignee may be seen from Carver on Carriage by Sea, §§ 608, 615; Egan v. Barclay Fibre

Digitized by Google

Co. (D. C.) 61 Fed. 527; Empire Transportation Co. v. P. & R. Coal Co., 77 Fed. 919, 23 C. C. A. 564, 35 L. R. A. 623; Williscroft v. Cargo (D. C.) 123 Fed. 169.

If the contract, as is generally the case, fixes the lay days and demurrage, failure of the vessel to discharge promptly results in exactly the same consequence, viz., an extension of the lay days. Of course, if a vessel, having agreed to load or discharge a cargo on a day certain, fails to do so, the usual consequences of a breach of contract may be recovered. The question was discussed in Petrie v. Heller (D. C.) 35 Fed. 310.

The cases relied on by the court below are not cases of a vessel's delay in loading or discharging. In The Nadia the claim was not against the carrying vessel or her owners, but by the consignee of the cargo against a lighterman employed to receive it, through whose delay the consignee had to pay demurrage to the carrying vessel. Welsh v. Andersen, 7 Asp. Mar. Cas. 177, was an action at law to recover damages for breach of contract. The vessel, which was a general ship, had agreed to receive the plaintiff's consignment of cargo on a day fixed. Her failure to do so resulted in the plaintiff's having to pay demurrage to the railroad company for the cars in which the consignment was kept waiting. A verdict for plaintiff was sustained. The Giulio (D. C.) 34 Fed. 909, did not involve a delay due to the vessel in loading or discharging of cargo, but a delay in performing the voyage.

The decree is reversed, with costs.

(161 Fed. 719.)

UNION PAC. R. CO. v. BRADY.

(Circuit Court of Appeals, Eighth Circuit. April 23, 1908.)

No. 2,635.

1. MASTER AND SERVANT—INJURIES TO SERVANT—DEFECTIVE APPLIANCES—RAILROAD COUPLERS—EVIDENCE.

In an action for injuries to the foreman of a switching crew by his hand being crushed between the parts of an automatic coupler, evidence *held* insufficient to show that the coupler was defective.

[Ed. Note.—Duty of railroad companies to furnish safe appliances, see note to Felton v. Bullard, 37 C. C. A. 8.]

2. SAME—DUTY OF SERVANT—NONPERFORMANCE—EXCUSE.

Where plaintiff, the foreman of a switching crew, discovered that the automatic couplers on the ends of two cars sought to be coupled would not work by means of the lever on the side of one of the cars, it was plaintiff's duty to cross over and use the lever on the other car to operate the coupler, instead of attempting to do so by hand, and it was no excuse for his failure so to do that it was dangerous to cross between the cars to the other side of the track; the cars being stationary and the switch engine attached to those which were to be moved up to make the coupling being subject to his orders.

3. SAME—FELLOW SERVANTS.

The act of a member of a railroad switching crew in giving a signal to the engineer to push a coal car forward while plaintiff, the foreman of the crew, was in a place of danger between the cars endeavoring to ad-

Digitized by Google

just the automatic coupler, was negligence of plaintiff's fellow servant, for which no recovery could be had under the laws of Wyoming.

[Ed. Note.—For cases in point, see Cent. Dig. vol 34, Master and Servant, §§ 493–514.]

In Error to the Circuit Court of the United States for the Eastern District of Missouri.

R. W. Blair and F. L. Schofield (N. H. Loomis and H. A. Scandrett, on the brief), for plaintiff in error.

H. J. West and Thomas F. Gatts (T. M. Bresnehen, on the brief), for defendant in error.

Before HOOK, Circuit Judge, and CARLAND, District Judge.

HOOK, Circuit Judge. Thomas J. Brady, who will be referred to as the plaintiff, recovered a judgment against the Union Pacific Railroad Company for personal injuries sustained while in its service at Laramie, Wyo. He was the foreman of a switching crew, consisting of himself, two other switchmen, and an engineer and fireman of a switch engine. A west-bound freight train had come into the yards at Laramie, the engine and caboose were detached, and plaintiff and his crew were engaged in transferring additional cars from another track to that upon which the train lay, preparatory to coupling them to the train and completing it for its westward interstate journey. With the switch engine and an attached caboose they picked up two stock cars from the other track, pulled them to the switch, and kicked them down the track in the direction of the standing train. They then went back and got six or seven coal and flat cars, pulled out again to the switch, and then pushed them in towards the two stock cars, intending to make a coupling and afterwards add them to the train. When the engine with the last lot of cars pulled down to the switch, plaintiff did not follow it, but crossed over the tracks and stood at the end of the stock cars a minute or two, awaiting the approach of the others, so that he could assist in making the coupling. He noticed the knuckle of the automatic coupler on the end of the stock car where he stood was closed, and that the lift lever was on the opposite side of the car, across the track. He did not then attempt to raise the pin and open the knuckle. As the other cars approached, being pushed by the switch engine, a steel coal car was at the fore, and plaintiff noticed that the knuckle of its automatic coupler was open and that the lift lever was on the side of the car nearest to him. It was thought a coupling could be effected without opening the knuckle on the stock car, but when it was attempted the cars did not couple and the stock car bounded away. This was probably because the stock car was on a slight curve in the track and the couplers were not sufficiently in line. When this is the case the better practice is to open both knuckles. Stop and caution signals were then given the engineer, and when the cars came to a standstill there was a space between their ends of 5½ or 6 feet, and the drawbars were 2½ or 3 feet apart. The plaintiff thereupon went between the cars and endeavored to lift the lug pin and open the knuckle of the coupler of the stock car with his hands; but, finding it resisted his efforts, he stepped out, took hold

Digitized by Google

of the lift lever on the coal car, and, as he says, "jerked it twice, maybe three times," to reopen the knuckle on that car; it having closed in the previous impact. Not succeeding in this, he went between the cars again, and, while attempting to lift the lug pin and open the knuckle on the coal car with his hands, the switch engine pushed the car forward in response to a signal from one of plaintiff's associates, and his right hand and wrist were caught between the couplers and crushed. Shortly afterwards, not exceeding an hour, the coupling appliances on the two cars were examined. Two or three jerks of the lift lever on the stock car raised the pin and opened the knuckle. There was nothing whatever the matter with this appliance, excepting that it was new and worked a little hard. The lever on the coal car operated perfectly with the first effort. The coupling appliances on the two cars were of different makes, but were of standard kinds in general use, and were so constructed as to work together and couple automatically. The one on the stock car was used more generally in the East. The plaintiff at no time tried the lever on the stock car.

Plaintiff's case rests upon a supposed defective condition of the coupling appliance on the coal car amounting to a violation of Act Cong. March 2, 1893, c. 196, 27 Stat. 531 (U. S. Comp. St. 1901, p. 3174), and upon the sufficiency of his reasons for failing to use the lever of the stock car. The assertion that the coal-car appliance was defective was largely guesswork. It was after dark, and when plaintiff tried the lever on that car he judged by the sound that the chain connecting it with the lug pin was too long. He said: "The lift lever chain seemed too long. It held. * * * I think that the lift lever chain was too long." The chain struck against something, but what it was he could not tell. He "guessed" and "thought" it was the end of the car. It is true he said that after leaving the lever he went between the cars, and just before the accident caught hold of the chain with one hand; but the inspection made shortly afterwards showed the lever operated perfectly at the first trial, and the connection consisted of but a single link such as was commonly used in couplers of that description. To meet this it was suggested that a repair might have been made between the times of injury and inspection, but there was not the slightest proof of one; also that if the single link was there when he was at work it might have been cramped in a horizontal position. This latter, however, was a condition that was not infrequent, and one that ordinarily could be corrected by several sharp jerks of the lever. We are of opinion there was no substantial evidence of a defective condition of this appliance. But, if this were not so, it was plaintiff's duty to use the lever on the other car. He said he considered it dangerous to cross between the cars to the other side of the track, although no engine was connected with the stock car, and the switch engine was subject to his orders and could have been quickly directed to pull the coal car further away. Similar and equally insufficient excuses were given for not adopting other obvious ways to get to the lever on the stock car. In this particular the case falls within the doctrine of Suttle v. Railroad, 75 C. C. A. 470, 144 Fed. 668, American Linseed Co. v. Heins, 72 C. C. A. 533, 141

Digitized by Google

Fed. 45, Gilbert v. Railway, 63 C. C. A. 27, 128 Fed. 529, Id. (C. C.) 123 Fed. 832, and Morris v. Railway, 47 C. C. A. 661, 108 Fed. 747.

Plaintiff was 37 years of age, had 12 years' experience as a brakeman, switchman, and yardmaster, and was thoroughly familiar with that branch of railroad service. He admitted it was a very common occurrence for the effective operation of a coupling appliance to require several forcible jerks of the lever—as many as three or four. This is naturally so, and it does not imply a defect in the condition of the mechanism if it is of an approved pattern. Exposure to weather and rust will cause the best of them to work hardly at times, and the connecting link or links will occasionally become cramped. Such things are unavoidable, and it is the duty of him who works with such appliances to give them a fair and reasonable trial before going into a place where life and limb are in jeopardy; otherwise, the well-known tendency, born of familiarity with danger, to do a thing the easier rather than the safer way will frustrate the beneficent purposes of the act of Congress and deprive it of much of its potency.

But one other matter remains: The act of plaintiff's associate in giving the signal to the engineer to push the coal car forward while plaintiff was in a place of danger was the act of a fellow servant, for which no recovery can be had under the Wyoming law. The trial court should have directed a verdict for defendant, as was requested at the conclusion of the evidence.

The judgment is reversed, and the cause remanded for a new trial.

(161 Fed. 722.)

WASSERMAN v. UNITED STATES et al.

(Circuit Court of Appeals, Eighth Circuit. May 2, 1908.)

No. 2,160.

1. CONTEMPT—ABATEMENT—PROCEEDINGS FOR CIVIL CONTEMPT NOT ABATED BY DEATH.

   The defendant in a suit in equity was adjudged to pay a fine, and to be committed until he paid it, for contempt of court in violating a preliminary injunction. He sued out a writ of error and died before a hearing here. *Held*, the proceedings for the contempt were civil, and not criminal, and did not abate by his death.

2. CONTEMPT—CIVIL AND CRIMINAL DEFINED.

   Proceedings for contempt are of two classes—criminal or punitive, and civil, remedial, or coercive. The former are conducted to preserve the power and vindicate the dignity of the courts and to punish for disobedience of their orders. The latter are instituted to protect, preserve, and enforce the rights of private parties and to compel obedience of the orders, judgments and decrees of the courts made to enforce the rights and remedies to which the courts have decided that such parties are lawfully entitled.

   [Ed. Note.—For cases in point, see Cent. Dig. vol. 10, Contempt, §§ 1-5.]

(Syllabus by the Court.)

In Error to the Circuit Court of the United States for the Eastern District of Missouri.

See 128 Fed. 770.

Digitized by Google

David Goldsmith, for plaintiff in error.
George F. McNulty and J. R. Van Slyke, for the United States.
Before SANBORN and HOOK, Circuit Judges.

SANBORN, Circuit Judge. In a suit in equity brought in the court below by the Cleveland, Cincinnati, Chicago & St. Louis Railway Company against Bennett Wasserman and others, to prevent alleged irreparable injury to the complainant's business and property, and to recover damages for injuries already inflicted, a temporary injunction was issued against the defendants, by which they were forbidden to buy, deal in, or sell any signed contract, nontransferable, reduced rate ticket thereafter issued by the railway company. Wasserman disobeyed this injunction, and upon an order to show cause why he should not be attached for contempt of process of the court a judgment was rendered that he was guilty of the contempt charged, and "that, as a punishment therefor, the said Bennett Wasserman be fined in the sum of $500 and the costs of this proceeding, and that in default of the payment of said sums that he be confined in the common jail of the city of St. Louis until the fine and costs are paid, or until the further order of the court." He sued out a writ of error to reverse this judgment. After this writ was issued and before the case was submitted to this court for a hearing, he died. His death has been suggested, and the defendants in error insist that this proceeding has been abated by his death. They cite in support of this position Herrington v. State of Georgia, 53 Ga. 552, O'Sullivan v. People, 144 Ill. 604, 32 N. E. 192, 20 L. R. A. 143, State v. Martin, 30 Or. 108, 110, 47 Pac. 196, March v. State, 5 Tex. App. 450, 456, and State v. Ellvin, 51 Kan. 784, 33 Pac. 547, but these cases are all criminal actions in which judgments were rendered in original criminal proceedings for violations of statutes. They are met here by the contention that this is a civil proceeding, and that for this reason it survived the death. In the case In re Nevitt, 117 Fed. 448, 458, 54 C. C. A. 622, 632, this court said:

"Proceedings for contempts are of two classes—those prosecuted to preserve the power and vindicate the dignity of the courts, and to punish for disobedience of their orders, and those instituted to preserve and enforce the rights of private parties to suits, and to compel obedience to orders and decrees made to enforce the rights and administer the remedies to which the court has found them to be entitled. The former are criminal and punitive in their nature, and the government, the courts, and the people are interested in their prosecution. The latter are civil, remedial, and coercive in their nature, and the parties chiefly in interest in their conduct and prosecution are the individuals whose private rights and remedies they were instituted to protect and enforce. Thompson v. Railroad Co., 48 N. J. Eq. 105, 108, 21 Atl. 182; Hendryx v. Fitzpatrick (C. C.) 19 Fed. 810; Ex parte Culliford, 8 Barn. & C. 220; Rex. v. Edwards, 9 Barn. & C. 652; People v. Court of Oyer and Terminer, 101 N. Y. 245, 247, 4 N. E. 259, 54 Am. Rep. 691; Phillips v. Welch, 11 Nev. 187, 190; State v. Knight, 3 S. D. 509, 513, 54 N. W. 412, 44 Am. St. Rep. 809; People v. McKane, 78 Hun, 154, 160, 28 N. Y. Supp. 981; 4 Bl. Comm. 285; 7 Am. & Eng. Enc. Law, 68."

This statement of the law has been quoted with approval by the Supreme Court in Bessette v. W. B. Conkey Co., 194 U. S. 324, 328, 24 Sup. Ct. 665, 48 L. Ed. 997, and by the Supreme Court of Mis-

Digitized by Google

souri in State v. Bland, 189 Mo. 197, 214, 88 S. W. 28. The judgment challenged by the writ of error in this case is in reality an interlocutory order in a suit in equity. The petition for an attachment which instituted the proceeding for contempt was entitled in the equity suit, and was made by the complainant therein. The order to show cause, the return of the defendant thereto, the judgment for fine and imprisonment, the assignment of errors, and the petition for the writ of error are all entitled in the equity suit. The offense on account of which the fine was imposed consisted in the doing by the deceased of an act which the court below, for the benefit of the complainant, had ordered him not to do, and the judgment for the fine and for the imprisonment until it was paid was in the nature of an execution to compel him to comply with the original order to refrain from selling the tickets there described.

Even if the adjudication had been made in a criminal case, the court below could have issued an execution and have levied it upon the property of the defendant for the purpose of collecting the fine. Rev. St. § 1041 (U. S. Comp. St. 1901, p. 724). But the proceeding in this case was clearly civil, and not criminal, and the judgment for the punishment a mere interlocutory order in a suit in equity (Worden v. Searls, 121 U. S. 14, 25, 7 Sup. Ct. 814, 30 L. Ed. 853; Heinze v. Butte & B. Consol. Min. Co., 129 Fed. 274, 63 C. C. A. 388, 389, 401), and the court below still retained jurisdiction to enforce the collection of the fine by execution, or other process or order. The suit in equity in which this order was made was not an action for injury to the person, but for injury actual and threatened to the property and business of the complainant, and it did not abate with the death of the defendant Wasserman. The interlocutory order in that suit for the payment of the fine and the commitment of the defendant who has died was collectible out of his estate and property, both before and after his death, and his representatives after his decease were therefore interested in prosecuting the writ of error and reversing the judgment if possible. Even if this had been a criminal proceeding, the executors and administrators of the estate would have been liable to its extent to the payment of this fine. Rev. St. § 3468 (U. S. Comp. St. 1901, p. 2314) 3 Williams on Executors (7th Ed.) 240. Inasmuch as the liability of the estate and property of Wasserman to the payment of this judgment continued after that property passed to the hands of his executors or administrators, and inasmuch as that judgment was rendered in a civil and not in a criminal proceeding for a contempt of court, the cause of action survived and the representatives of the estate of the deceased are entitled to prosecute the writ of error in this court to the same extent as was the deceased. Neither the writ of error nor the proceedings for the contempt were abated by the death of Wasserman.

Digitized by Google

(161 Fed. 725.)

ST. LOUIS STREET FLUSHING MACH. CO. et al. v. SANITARY STREET FLUSHING MACH. CO.

(Circuit Court of Appeals, Eighth Circuit. April 6, 1908.)

No. 2,652.

1. PATENTS—SUIT FOR INFRINGEMENT—PRELIMINARY INJUNCTION.

A preliminary injunction should not be granted in a patent case, without a showing that the patent in suit has been adjudged valid by a court of competent jurisdiction, or that its validity has been generally acquiesced in by the public or has been admitted by defendant.

[Ed. Note.—For cases in point, see Cent. Dig. vol. 38, Patents, §§ 474–477.

Grounds for denial of preliminary injunction in patent infringement suits, see note to Johnson v. Foos Mfg. Co., 72 C. C. A. 123.]

2. COURTS—JURISDICTION OF FEDERAL COURTS—FEDERAL QUESTION.

A bill to compel specific performance of a contract to assign a patent and to restrain the alleged violation of a license contract under a patent states no ground for relief under the patent laws, and a federal court is without jurisdiction to grant relief thereon, unless there is diversity of citizenship between the parties.

[Ed. Note.—For cases in point, see Cent. Dig. vol. 13, Courts, § 832.

Jurisdiction of federal courts in suits relating to patent rights, see note to Bailey v. Mosher, 11 C. C. A. 313.]

3. ESTOPPEL—SUIT FOR INFRINGEMENT—ESTOPPEL TO DENY VALIDITY.

The fact that one of the assignors of a patent subsequently became associated with others, and with them is charged with infringement of such patent, does not estop them to deny its validity, where the relations between the defendants are not shown.

4. INJUNCTION—PRELIMINARY INJUNCTION—SUFFICIENCY OF GROUNDS.

A preliminary injunction should not be granted, where the right alleged to be invaded or threatened is doubtful and uncertain on the showing made.

[Ed. Note.—For cases in point, see Cent. Dig. vol. 27, Injunction, § 309.]

Appeal from the Circuit Court of the United States for the Eastern District of Missouri.

In 1904 the Sanitary Street Flushing Machine Company exhibited its bill against the St. Louis Street Flushing Machine Company, William Ratican, Stephen J. Ratican, and James C. Wilson, to secure an injunction and accounting for an infringement of letters patent of the United States Nos. 736,134 and 736,135, granted to Thomas M. Murphy as inventor, and William Ratican as assignee of some interest, and by them assigned to complainant, for improvements in nozzles and street washers respectively. The prayer of the bill was for an injunction, and for the recovery of profits earned and to be earned by the use of the improvements, which the complainants allege the defendants intended to continue using. An amended bill was afterwards filed; but the averments of threatened and continuing infringement remained practically as in the original bill. In May, 1907, a supplemental bill was filed, wherein it was averred that Murphy and Ratican, before the patents were granted to them in the year 1901, made an agreement with complainant or its promoters to convey to it any inventions or patents relating to the cleaning, sprinkling, or flushing of streets which either of them might thereafter make or acquire; that defendant Ratican, acting in the name of the defendant corporation, which, it is averred, he largely owned and controlled, afterwards acquired United States patent No. 777,053 for adjustable flushing nozzles from the defendant Wilson, the patentee thereof; and that complainant was entitled in equity to a conveyance of that patent in accordance with the terms of the agreement of 1901. The supplemental bill also showed that in 1901 Ratican and Mur-

Digitized by Google

phy solicited a license from the complainant to permit them to build within the United States nine certain machines embodying the invention of complainant's patents for exportation and use abroad; that complainant conformed to their request and gave them a verbal license as solicited, with the condition, however, that the machines should not be used or sold within the United States; that the machines were built, exported to London, and afterwards brought back to this country, and in violation of the condition of the license put into use here by the defendants. The prayer of the supplemental bill was that the defendants be required to assign and convey to complainant letters patent No. 777,053, and that a preliminary and ultimately a final injunction restraining defendants from selling or using the nine machines in the United States in violation of the license agreement be awarded to complainant. A motion for a preliminary injunction as prayed for accompanied the supplemental bill. The motion was supported by affidavits tending to show the license as pleaded, and was resisted by affidavits tending to show that no such license was ever given to or accepted by defendants. The trial court sustained the motion and awarded a preliminary injunction, restraining defendants until further order of the court from using or selling all or any of the nine machines in question. From this order the present appeal was prosecuted.

Henry W. Allen and James A. Carr (John D. Johnson, on the brief), for appellants.

James L. Hopkins (John M. Holmes and Alfred A. Eicks, on the brief), for appellee.

Before HOOK and ADAMS, Circuit Judges, and CARLAND, District Judge.

ADAMS, Circuit Judge (after stating the facts as above). Neither the original nor the amended bill warranted a preliminary injunction. They contained no showing that the patents charged to have been infringed had ever been admitted to be valid by the defendant, or held valid by any court of competent jurisdiction, or that their validity had been generally acquiesced in by the public. Without a showing of one or the other of these facts, no preliminary injunction ought to be granted in a patent case. Recognizing this rule, no attempt was made to secure an injunction on the strength of the showing made in the bill or amended bill. It must therefore be justified, if at all, on the showing made by the supplemental bill; and if the fact that defendants threatened to use or sell the machines in question in violation of the condition of the license did not justify the injunctive order it was improvidently made.

By sections 629 and 711 of the Revised Statutes (U. S. Comp. St. 1901, pp. 503, 577) the courts of the United States are given exclusive jurisdiction of all cases at law or in equity arising under the patent or copyright laws of the United States, irrespective of the citizenship of the parties to the action. To constitute such a suit a complaint or bill must disclose that some right, title, or interest under the patent laws of the United States is asserted, or that some right or privilege will be defeated by one construction or sustained by the opposite construction of those laws. Pratt v. Paris Gaslight & Coke Co., 168 U. S. 255, 259, 18 Sup. Ct. 62, 42 L. Ed. 458. A suit not involving such a right, title, or interest may be litigated in the federal courts if the requisite diversity of citizenship exists, but otherwise not. Such diversity of citizenship not appearing in this case, the ground

Digitized by Google

for relief must rest on the statute exclusively, and unless, and only so far as, a right thereunder is asserted can any relief be granted in this case. As is well known, a suit for injunctive relief against the infringement of a patent, and incidentally for the recovery of damages arising therefrom, is one arising under the patent laws of the United States, and may be maintained in the courts of the United States; but it is firmly settled that, in the absence of diversity of citizenship of the parties, a suit on a private contract between the parties fixing and governing their rights to use a patented device, or a suit for the specific performance or rescission of a contract for the use or sale of a patent, is not maintainable in those courts.

In Wilson v. Sanford, 10 How. 99, 13 L. Ed. 344, and Brown v. Shannon, 20 How. 55, 15 L. Ed. 826, it was held that the owners of letters patent of the United States could not maintain a bill in the federal courts to enforce a contract for the use of a patent, or to set aside such a contract on the ground that defendant had not complied with its terms. In Dale Tile Mfg. Co. v. Hyatt, 125 U. S. 46, 8 Sup. Ct. 756, 31 L. Ed. 683, it was held that an action upon an agreement in writing fixing the terms on which a licensee might sell the device of a patent, wherein the licensee acknowledged the validity of the patent and promised to pay certain royalties, was not a case arising under the patent laws of the United States. In Albright v. Teas, 106 U. S. 613, 1 Sup. Ct. 550, 27 L. Ed. 295, in a suit instituted to recover moneys alleged to be due the plaintiff under a contract whereby letters patent granted to him were transferred to defendant, it was held that the suit was not one arising under the laws of the United States. In Pratt v. Paris Gaslight & Coke Co., supra, Mr. Justice Brown, speaking for the Supreme Court, said:

> "We have repeatedly held that the federal courts have no right, irrespective of citizenship, to entertain suits for the amount of an agreed license, or royalty, or for the specific execution of a contract for the use of a patent, or other suits where a subsisting contract is shown governing the rights of the party in the use of an invention, and that such suits not only may, but must, be brought in the state courts."

In the absence of the assertion of a right arising under the patent laws, or of the requisite diversity of citizenship, the Circuit Court was without jurisdiction to grant the relief sought by the supplemental bill in either of its aspects, either to award specific performance of the agreement to assign patent No. 777,053 or to restrain the violation of the license contract. The facts disclosed by that bill may, if true, show an infringement of complainant's patents within the rule laid down in Heaton-Peninsular Button-Fastener Co. v. Eureka Specialty Co., 25 C. C. A. 267, 77 Fed. 288, 35 L. R. A. 728, relied on by complainant's counsel; but they constitute only cumulative averments of such infringement. The bill and amended bill both alleged infringements in the past and a purpose to continue the same in the future. The extent of the infringement, or the time when practiced, as particularized in the supplemental bill, does not aid the complainant, for the reason, already stated, that there had been no prerequisite adjudication or admission of the validity of its patents or other equivalent demonstration thereof.

Digitized by Google

The contention that defendants are estopped from questioning their validity because of Ratican's relation to them is untenable. Whatever effect his original partial interest in them or his personal conduct with respect to them might have upon his present interests, as to which we express no opinion, the rights of others are now involved in this case, and their relation to Ratican is not so clearly shown as to warrant making any orders affecting their rights on the assumption of their identity with him.

For another reason, also, the preliminary injunction ought not to have been granted. It is a fundamental principle that injunctions ought not to issue unless the right alleged to be invaded or threatened is clear. As said in Truly v. Wanzer, 5 How. 141, 12 L. Ed. 88:

"There is no power the exercise of which is more delicate, which requires greater caution, deliberation, and sound discretion, or more dangerous in a doubtful case, than the issuing of an injunction. It is the strong arm of equity, that never ought to be extended, unless to cases of great injury, where courts of law cannot afford an adequate and commensurate remedy in damages. The right must be clear, the injury impending and threatened, so as to be averted only by the protecting preventive process of injunction."

The affidavits in support of and against the motion for injunction leave the existence of the verbal license relied on by complainant in grave doubt and uncertainty, too doubtful and uncertain, at least, to warrant interference with the status quo until the right can be deliberately ascertained and declared at final hearing.

The order awarding the preliminary injunction was improvidently made. It must therefore be reversed, and the cause remanded, with directions to deny the motion. It is so ordered.

(161 Fed. 728.)

DRAPER CO. v. AMERICAN LOOM CO. et al.

(Circuit Court of Appeals, First Circuit. April 8, 1908.)

No. 731.

1. PATENTS—INVENTION AND INFRINGEMENT—LOOMS.

The Rhoades patent, No. 454,791, for an improvement in looms, was not anticipated, and, while a narrow one, discloses invention; also *held* infringed.

2. SAME—SUIT FOR INFRINGEMENT—NATURE OF RELIEF.

Where a patent, at the time of a decree adjudging its infringement, has but a short time to run and is for a minor part of a machine, by reason whereof the defendant is liable, if enjoined, to suffer a loss out of proportion to the value of the transaction, the court may, in its discretion, instead of granting an injunction, permit the defendant as an alternative to compensate the complainant or to secure such compensation.

[Ed. Note.—For cases in point, see Cent. Dig. vol. 38, Patents, §§ 561-563.]

Appeal from the Circuit Court of the United States for the District of Massachusetts.

William K. Richardson (J. Lewis Stackpole, on the brief), for appellant.

William A. Jenner, for appellees.

Digitized by Google

Before COLT and PUTNAM, Circuit Judges, and ALDRICH, District Judge.

PUTNAM, Circuit Judge. This is a bill brought against the American Loom Company and one of its officers, which, so far as we are concerned, alleges infringement of the fifth claim of letters patent No. 454,791, issued to Alonzo E. Rhoades on June 23, 1891, on an application filed on February 11, 1890, for an improvement in looms of the class in which the shuttle-box is supplied with a shuttle while the lay is in rapid motion. The bill prays, as usual, an injunction and an account against both the American Loom Company and the officer referred to. The Circuit Court dismissed the bill, and the complainant appealed to us. So far as the officer of the respondent corporation is concerned, the case is not brought within the rule established by us in National Cash Register Co. v. Leland, 94 Fed. 502, 509, 37 C. C. A. 372, et seq. Therefore, as to him, the final decree will provide that the bill be dismissed; and, as he has been brought in as one against whom substantial relief is asked, he will recover his costs in the Circuit Court.

The claim in issue is as follows:

"Claim 5. The lay, a rocker having arms provided with a front plate, a^7, and a spring and devices between it and the said rocker, to actuate the latter at the proper time to close the front plate at the front of the lay, substantially as described."

The preliminary facts were correctly stated by the learned judge of the Circuit Court as follows:

"The Rhoades patent is concerned with the front or 'front plate' of a shuttle-box. Its application is limited to that sort of shuttle-box which is replenished automatically with a fresh shuttle and a full bobbin when the thread of the spent bobbin is exhausted. At the proper time, and when all the machinery of the loom is in rapid motion, the front plate is gotten out of the way so as to admit the shuttle to the box. After the entry of the shuttle, the front plate is returned to its former place. To secure accuracy of movement in the shuttle, it must fit the box as closely as is consistent with movement across the warp from the box on one side of the loom to that on the other side. Hence there is left no appreciable space between the front plate and the shuttle after the box has been closed by the return of the front plate to its place. The claim of the Rhoades patent here in suit is concerned with the elevation and subsequent lowering of the front plate for the above-described purpose. The result is accomplished by a rocker, whose means of actuation need not be considered here."

We must, however, add to the above that, although the claim in issue does not in terms point out that the rocker and arms are to have a solid construction, so as to be practically a unit, the fair interpretation involves that fact.

The Circuit Court referred to certain alleged anticipations relied on by the respondent corporation, two English patents, and one United States patent, which, according to the views of the respondent corporation, either wholly anticipated claim 5, or so far narrowed it that the respondent corporation could not be held to have infringed. We will hereafter refer to each of these patents again, but, for the present,

Digitized by Google

we only speak of them generally as showing the state of the art in explanation of the nature of the complainant's invention. We think that two of the patents referred to show that the entire improvement covered by claim 5 was in substituting the solid construction of the rocker and arms which we have named in lieu of the prior constructions, which were somewhat more complicated, and which might fail to register so accurately. In view of the general state of the art since the use of iron and steel has become universal, a mere substitution of solid construction does not presumably involve invention. Nevertheless, in exactly the same art as that at bar—that is, the art of constructing power looms—which, as everyone knows, must move with rapidity and require great accuracy, we sustained in Houghton v. Whitin Machine Works, 153 Fed. 740, 83 C. C. A. 84, decided by us on February 12, 1907, a patent regarding the construction of a thread-guide support, where exactly and only the same kind of improvement as that at issue here was the subject-matter thereof. Moreover, in the case at bar, we have not only the persistency of the respondent corporation in availing itself of the complainant's improvement, but also a mass of alleged anticipatory patents introduced by it, both of which indicate the desirability of something better than the prior art. On the whole, while the invention is a narrow one, and, in the absence of the circumstances to which we have referred, might lack patentability, we are compelled to give the complainant the benefit which the issuing of its patent implies. We will add that it is urged on us that the complainant made no commercial use of the patented device; but, utility and patentability being otherwise established, we are not required to investigate the excuse given by the complainant for non-user.

In regard to the three patents referred to, all of which are discussed by the learned judge of the Circuit Court, we think the complainant is correct in its explanation as to two of them, namely, the patents to Mayne and Brooks, that in each the front plate slides vertically in guide-ways, so that the solid construction of the rocker and arms is absent from them, and the lack of it lays them out of the case. The third patent referred to, the British patent issued to one Bullough in 1866, is apparently relied on as approximating most nearly to the claim in suit. The Circuit Court thought that this patent was so loosely drawn that it was unable to find in it a disclosure sufficiently clear to anticipate. So far as the feature involved here is concerned, the Bullough patent does not seem to have been tested practically. Of course, where mechanical improvements have moved so fast as they have in the last half century, great caution is required in investigating alleged anticipations which date back nearly the whole of that period; and, so far as they did not go into use, so that there was no practical exhibition of them, it is often difficult to determine whether they disclosed such full, clear, and exact terms as are necessary to anticipate. The respondent corporation has called our attention to the fact that the file wrapper shows that the Rhoades application contained originally two claims which were rejected by the Patent Office on a reference to Bullough, which claims were as follows:

Digitized by Google

"1. The lay having a shuttle-box composed in part of a front plate and arms extended across the lay above the level of its raceway, substantially as described.

"2. The lay, a rocker mounted on the rear side of the lay, and having arms to which is secured the front plate of the shuttle-box, substantially as described."

This fact, however, assists the view taken by the learned judge of the Circuit Court. The application at that time contained claim 5, as against which no reference was made by the Patent Office to Bullough, so that that claim was allowed to stand from the beginning just as we find it now. The claims rejected were of the broadest character, and would cover every combination in which was found a front plate made solid with the arms. Such a combination was shown by Bullough, and, therefore the broad claims were rejected; but there is no evidence that the Patent Office found in Bullough a combination of the front plate and arm made solid in connection with the exact elements and for the exact purpose of the combination of elements in claim 5. Claim 5 is limited by its letter to closing the shuttle-box at the end of the lay where the new shuttle is introduced, while the Bullough device was limited to a shuttle-box at the end of the lay where the old shuttle is ejected, and was described by him as merely an alternative method. At the other end, Bullough's shuttle was inserted downward from the hopper on the top of the lay, so that there was no question of a movable front plate. The inventive element in the claim in suit is of a minimum quantity, but that minimum quantity embraces the difference between a shuttle-box which requires to be closed in a simple manner with accurate registration and a shuttle-box to be opened by any method practicable for opening it. On the whole, construing claim 5 as we construe it, and limiting the inventive element therein as we limit it, we are satisfied there is no anticipation in any of the patents which have been brought to our attention.

This leaves only the question of infringement. As to this the respondent corporation relies on the words in claim 5, "and devices between it and said rocker." It says that all it uses is a stud on the end of the rocker arm to which the spring is attached, and in connection with which the spring operates to pull down the arm at the right instant. That anything which connects the spring directly or indirectly with the arm for the purpose of operating it in any way constitutes devices, in either the common or the mechanical sense of the word, is too plain to question. Therefore the only issue here is whether what thus appears in claim 5 is limited to any special devices. The specification does exhibit special devices, which may or may not be better than the arrangement used by the respondent corporation. The words at the close of the claim, "substantially as described," might or might not incorporate into the claim those special devices. These words are sometimes used to limit a claim, and sometimes to enlarge its operation, but seldom to practically defeat what was the real invention of the patentee. In the present case we have shown that that invention, so far as we are concerned, has no relation to these intervening arrangements for operating the arm in connection with the spring, but is limited to the solid construction of the rocker and the arm. Ap-

Digitized by Google

the winter, we understand that you will send us five scow loads of such stone, containing about 3,000 cubic yards in all, and will deliver the same alongside the North German Lloyd docks at Hoboken within the next few days, allowing them to remain there during the winter months; also that we may use the stone from these scows as occasion requires, without charge for demurrage to us until such time as a scow is taken from the lot for our use, and demurrage shall only accrue on that scow after sufficient time has elapsed in which to unload the scow at a minimum rate of 75 yards per day (Sundays and holidays excepted). The scows while lying in the slip to be solely at your risk, and you will provide such men as may be needed to look after them, and when a scow shall have been unloaded by us you will remove it from the premises."

In accordance therewith the Sarah, with four other scows laden with stone, was towed to the north side of pier No. 2 on December 29, 1901, where she lay until January 3, 1902, when the Staats Company desired her space to bring in a barge of other material, and requested the tug of the North German Lloyd Company, which did the towing for all parties, to remove her. During this interval the scows were treated as undelivered, for two of them were removed by libelants and others substituted for them without consulting the Staats Company, and there was no proof to show that in requesting the removal of the Sarah the Staats Company directed at what point she should be moored, or accepted her in any such way as under the foregoing letter thereafter subjected itself to demurrage. The tug moved the scow to the south side of pier No. 1, where she was tied by the scow's crew. The tide was then ebbing rapidly, aided by a strong westerly wind, which had been blowing for two days, and which caused the tide at the time of the accident to drop from 18 to 24 inches lower than usual. Pier No. 1 was then being constructed by the Staats Company. On its south side and at some distance therefrom there was piling extending parallel to the pier and through an opening in which the scow, as well as other craft, were warped to moor along the pier. What followed is stated in this extract from the opinion of the court below:

"The scow was moored on the south side of pier 1, breast off five feet, and was tied with two breast and two spring lines. The tide was ebbing rapidly, aided by a strong westerly wind, which had been blowing for two days, and which had caused the tide at the time of the accident to fall from 18 inches to 2 feet lower than usual. After the scow had laid at her mooring about three-quarters of an hour, she began to list away from the pier. Her captain sounded the water around her with a 16-foot pole, to see if the water were shallow; but he found no bottom. He then went down into the hold and heard water beginning to trickle slowly in. While he waited on the scow a pile broke through her bottom, and she careened over gradually to the port side. He then went up the pier to look for help, and when he came back, a few minutes later, the scow lay bottom up, with one corner on the pier and the other in the water. He tried to ease up the lines to see if she would slide off, but she did not. While she lay there, the watchman says he saw a jagged hole in her bottom, 16 or 17 inches wide by about 2 feet in length. The hole was about one-third of her length from the bow, and about 2 feet from her starboard side, which had lain next to the pier. Subsequent examination of the scow at a dry dock, to which she was taken for repairs, showed that the injury to her was in all probability caused by her bottom coming in contact with a sunken pile, which, owing to the weight of her load, was forced through and rammed up in her hold as far as it could go, about 9 feet, and then, when the scow capsized by the spilling of its load, was broken off, and a piece thereof, about 8 feet in length, left in her hold in a reclining posi-

Digitized by Google

tion between the stanchions and cross-pieces. The portion of the pile found in the scow was a little less than 15 inches in diameter, about 9 feet long, and was in good condition, although it had a few barnacles on it. At one end appeared what is called a 'battered break,' as though a heavy weight had rested on it. This break had an old appearance, while at the other end was a new and longer break. It is apparent from the evidence that the accident happened by reason of the fact that the scow had been moored over a hidden pile: but how or when the pile came there is not disclosed."

Assuming, for present purposes, the responsibility of mooring the scow is on the Staats Company, is it responsible for the damage it suffered? Of the duty of wharf owners to "exercise reasonable diligence in ascertaining the condition of the berths thereat, and if there is any dangerous obstruction to remove it, or to give due notice of its existence to vessels about to use the berths," there is no question. Smith v. Burnett, 173 U. S. 430, 19 Sup. Ct. 442, 43 L. Ed. 756. But we think the standard of duty owing by the Staats Company was, under the circumstances, not exactly that required of a wharf owner in the usual course. This wharf was not in commercial use. It was unfinished. It and its surroundings were being used for construction purposes. A great fire had occurred. Piles were burned to the water's edge. Others below the surface had been dredged for. The location of the piers had been changed. All these were elements of danger, which were incident to this reconstruction work, and to which any one who used his craft in participating in such work would expect to subject them. When, for his own profit, the owner of such craft saw fit to use his vessels in forwarding such reconstruction, it is manifest he could not expect from the builder who was reconstructing the same measure of safety he could from one whose wharf was finished and held out as a safe place in which to moor. Clearly the obligation of the Staats Company to the libelant was simply one of due care under the circumstances. That the Staats Company was not guilty of willful lack of care is clear. A competent dredge company had dredged the site of this pier, and for from 25 to 40 feet along its sides, to the depth of 25 feet. Third parties, as well as the Staats Company, were using their boats in about these piers, and the latter subjected libelant's boats to no greater risks than its own. There was nothing to suggest to the Staats Company as prudent and careful men the exitsence of this submerged pile. The place had been dredged by a competent dredging company in a manner to give reasonable assurance that it was clear of such obstructions. In the hidden nature of such unknown obstructions there could be no absolute assurance of their nonexistence. The failure of an experienced dredging company to find them in going over the ground by sections, and then going over it in the same way in return, was well calculated to reasonably assure both the Staats Company and the libelant that the bottom was free from piles. In addition to the test of actual dredging to which the ground was thus subjected, drag tests of the ground certainly to a depth of 10 feet had been made. While the low water that caused the accident was not of such character to be classed as extraordinary, yet it certainly was out of the usual stage. The conditions and dangers incident to this work would naturally challenge the notice of the libelant as forcibly as they would that of the Staats Company, and in the nature of things

Digitized by Google

they could not expect that the Staats Company could or would be expected to provide them wharfage, hedged and safeguarded by the same standards the law would exact from a regular wharfinger; for the work of the Staats Company was in effect notice that the wharf was not a finished one or in shape for general commercial use. All these are elements to be considered in determining whether, under the circumstances in which libelant and the Staats Company were placed, there was an absence of due care on the part of the latter toward the libelant.

We find no such lack of care, but the mishap was evidently one of those accidents that occur by an unavoidable combination of unanticipated factors, and which the care called for by the circumstances did not prevent. The court below has found the Staats Company was not negligent. The Supreme Court of New Jersey in a trial of this controversy was of the same opinion, and nonsuited the plaintiff, and its judgment was affirmed by the Court of Errors and Appeals. Conklin v. Staats, 70 N. J. Law, 771, 59 Atl. 144. While those decisions are not binding, they are persuasive, and support the conclusion we have reached.

The decree of the court below is affirmed.

(159 Fed. 638.)

G. & C. MERRIAM CO. v. OGILVIE.

(Circuit Court of Appeals, First Circuit. January 30, 1908.)

No. 730.

1. TRADE-NAMES—NAME OF COPYRIGHTED BOOK—EXPIRATION OF COPYRIGHT—EFFECT.

On the expiration of the copyright on the name "Webster," used in connection with dictionaries, the name became public property; though such name as applied to the dictionary published by the owner of the copyright had acquired a secondary meaning, indicating a particular book published and sold by such owner.[1]

2. SAME.

The right to use a copyrighted name upon the expiration of the copyright becomes public property, subject to the limitation that the right shall be so exercised as not to deceive members of the public and lead them to believe that they are buying the particular thing which was produced under the copyright.

[Ed. Note.—For cases in point, see Cent. Dig. vol. 46, Trade-Marks and Trade-Names, § 16.]

3. SAME—USE OF NAME—ADVERTISING—INJUNCTION.

A publisher, whose copyright on the name "Webster" as used in connection with dictionaries has expired, may be enjoined by a competing publisher of dictionaries from issuing circulars to the effect that it has the exclusive right to use the name in such connection.

[Ed. Note.—For cases in point, see Cent. Dig. vol. 46, Trade-Marks and Trade-Names, § 86.]

4. SAME.

The copyright on "Webster's Unabridged Dictionary" having expired, a competing publisher of "Webster's Dictionary" or "Webster's Imperial

---

[1] See note at end of case.

Digitized by Google

Dictionary" may be enjoined by the original publisher from issuing misleading and deceptive circulars and advertisements which show an intention to trespass upon the reputation of the original publishers, and deceive purchasers into buying the competing publisher's dictionary, on the supposition that it is one of the series published by the original publisher.

[Ed. Note.—For cases in point, see Cent. Dig. vol. 46, Trade-Marks and Trade-Names, § 86.]

5. SAME.

The M. Co.'s copyright on the name "Webster," as used in the title of dictionaries, having expired, O. published dictionaries bearing that name, with the evident purpose of leading the public into supposing that they were buying Webster's Dictionary as improved by M. Important work of Noah Porter for M. is prominently referred to in its title pages. O.'s title page reads, "Being the authentic unabridged dictionary of Noah Webster, LL. D. * * * prepared under the direction of Noah Porter." On the backs of some of his publications O. printed "The latest complete authentic Webster's Dictionary," the word "authentic" being plainly borrowed from the backs of M.'s publications. *Held* that, though O. printed his name on the back or cover and on the title page of his dictionaries, and used "Imperial" and "Universal" in the title, and not "International," as used by M., he was guilty of unfair competition.

6. SAME—INTENT.

The presence of an inequitable purpose is an element of great weight in determining a question of fairness in trade.

[Ed. Note.—For cases in point, see Cent. Dig. vol. 46, Trade-Marks and Trade-Names, § 80.]

7. SAME.

Where one avails himself of the principle of public dedication of a name, he must in good faith fully identify his production, and clearly disassociate it from that of one who has given significance to the name, and sufficiently direct the mind of the trading public to the fact that, though the thing is of the same name, it is something produced and put upon the market by himself.

[Ed. Note.—For cases in point, see Cent. Dig. vol. 46, Trade-Marks and Trade-Names, § 86.]

Appeal from the Circuit Court of the United States for the District of Massachusetts.

For opinion below, see 149 Fed. 858.

William B. Hale and Frank F. Reed (Charles N. Judson, E. S. Rogers, and Judson & Hale, on the brief), for appellant.

George F. Bean, for appellee.

Before PUTNAM and LOWELL, Circuit Judges, and ALDRICH, District Judge.

ALDRICH, District Judge. This case involves a bill and a cross-bill, each party claiming injunction relief against the other. There was an injunction below against each party. The Merriam Company appeal upon the ground that it should not be restrained, and also upon the ground that the injunction against Ogilvie was not broad enough. Ogilvie did not appeal.

Whatever relief either party gets under these proceedings is afforded upon the ground of unfair competition rather than upon any theory of infringement of copyright or protected trade-name. This case does not, in any sense, stand like a case involving a trade-name established

Digitized by Google

in the course of business where, independent of statutory monopoly, the right to its exclusive and continuous use results from its adoption, adaptation, and use in trade and commerce.

The name "Webster" having been copyrighted by the Merriams, they were protected in its use under a statutory right during an expressed term of years. The protection, therefore, in that respect, came by virtue of the copyright rather than by virtue of its use in publication and trade.

The statutory monopoly having expired under statutory limitation, the word "Webster," used in connection with a dictionary, became public property, and any relief granted upon the idea of title or proprietorship in the trade-name of "Webster" would necessarily involve an unwarrantable continuance of the statutory monopoly secured by the copyright.

The authorities and the discussion of this phase of the case by the learned judge in the Circuit Court (Ogilvie v. Merriam Co. [C. C.] 149 Fed. 858, where the facts sufficiently appear) satisfy us in respect to the soundness of the proposition that upon the expiration of the copyright the name "Webster" passed into the field of public right.

We perceive no difference in principle between patent rights and copyrights in this respect, and, as observed by Mr. Justice White in Singer Manufacturing Company v. June Manufacturing Company, 163 U. S. 169, 16 Sup. Ct. 1002, 41 L. Ed. 118, "where, during the life of a monopoly created by a patent, a name, whether it be arbitrary or be that of the inventor, has become, by his consent, either express or tacit, the identifying and generic name of the thing patented, this name passes to the public with the cessation of the monopoly which the patent created." The Singer Case declares a general and undoubted principle which is quite decisive of the case under consideration so far as the name "Webster" is concerned, and though the name "Webster" as applied to the Merriam Company's dictionary had acquired a secondary meaning, indicating a particular book published and sold by them, it became public property when the copyright expired.

The right to use a copyrighted name, however, upon the expiration of the copyright, goes out to the public subject to a certain and well-understood limitation or condition, namely, that the public right to use shall be so exercised as not to deceive members of the public and lead them into the belief that they are buying the particular or identical thing which was produced under the copyright. That the right of public user of the name "Webster" was subject to such a condition was fully recognized by the learned judge who decided this case in the Circuit Court, and, indeed, the principle was forcibly stated by Mr. Justice White in the Singer case.

We think the conclusion reached by the Circuit Court, that the Merriam Company should be enjoined from sending out circulars to the effect that it has the exclusive right to use the name "Webster" in connection with dictionaries, was justified by the evidence and the authorities, and we are content to leave that branch of the case upon the reasoning contained in the opinion of the learned judge of the Circuit Court.

Digitized by Google

That court also points out, and we think the situation justifies it, that the Ogilvie circulars and advertisements are misleading and deceptive, and show an intention on the part of Ogilvie to trespass upon the reputation of the Merriam Company and to deceive purchasers into buying his dictionary for one of the series of Webster's dictionaries published by the Merriam Company, and it was held that Ogilvie should be enjoined from sending out circulars and advertisements in their present form. We agree that this should be so upon equitable principles, because it presents a situation in which a member of the public seeks to appropriate more than fairly and equitably belongs to him.

It is also our conclusion that the same purpose and the same reasoning hold good with respect to the title page of the Ogilvie publication.

It seems pretty evident from consideration of all the circumstances surrounding these publications, including the correspondence, the circulars, the advertisements, and the character of the litigation, that the purpose of Ogilvie was to put out such a publication and such circulars and advertisements as would lead the public into the supposition that they were buying the Webster Dictionary as improved and added to by the Merriam Publishing Company, and we think that the reasoning of the Circuit Court with respect to the circulars and advertisements applies with equal force to the title page of the Ogilvie publication.

We also think, in view of the ingenious arrangement of the prominent features of the Ogilvie title page, that its weight in the public eye is not fully and unmistakably overcome by printing the name "George W. Ogilvie" upon the back of the cover, or by printing the words "George W. Ogilvie, Publisher," as a part of the title page.

The reasoning of the Singer Case, which we think applies here, is that the name must be accompanied by such indications as will unmistakably inform the public that the thing is something put out by the particular party who appropriates it and exercises the public right.

If the title page of the Ogilvie dictionaries had contained, for instance, the words "Webster's Dictionary, published by George W. Ogilvie," with other expressions correctly indicating the identity of the publication, the Merriam Company would have no just cause for complaint. But such is not this case.

Noah Porter did important work, under the auspices, and in connection with the enterprise of the Merriam Company, and his work is prominently referred to in their title pages, which, in an abridged form, call attention to the subject-matter of their improved publications. Beyond question the conspicuous feature of the Ogilvie title page, "Being the authentic unabridged dictionary by Noah Webster, LL. D., with an exhaustive appendix, including Scripture proper names and pronouncing vocabulary of Greek and Latin proper names prepared under the direction of Noah Porter, D. D., LL. D.," refers to the subject-matter of the Merriam title page, and to something which was substantial and supplemental to the Merriam Dictionary, and something done, not by Ogilvie, but by the Merriam Company in the development and improvement of their publication.

Digitized by Google

The manifest tendency of such a prominent feature of the Ogilvie title page would be to lead purchasers into the idea that they were buying Webster's Dictionary improved by the work of Noah Porter, which would, of course, mean the Merriam publication. Moreover, the word "authentic," used in the setting devised by the plaintiff, was strongly calculated to lead the public mind in the direction of the Merriam publication. This, we think, indicates that the design and purpose which prompted the Ogilvie circulars and advertisements were present in the formation of the conspicuous features of the title page of the Ogilvie dictionary. The same considerations apply to the words and phrases on the backs of some of the Ogilvie publications, as, for instance, "The latest complete authentic Webster's Dictionary." The word "authentic" was plainly borrowed from the backs of the Merriam publications, and, though the setting was somewhat different because they used "Imperial" and "Universal" rather than "International," the impression still remains that their purpose was a play upon the words and phrases of the Merriam publications.

It is quite true that Ogilvie proceeded with his purpose under a claim of right, but, notwithstanding this, his title page, and his imprints upon the backs of his dictionaries, as well as his circulars and advertisements, involve legal and equitable wrong, because, in spirit and in fact, they ignore the obligation of full compliance with the condition which law and equity impose upon the copyrighted name when set at large, and, although the name "George W. Ogilvie" was used, it was not in fact intended that it should in all cases overcome the prominent features of the title page and the imprints upon the backs, and unmistakably lead the ordinary purchaser to a correct conclusion as to the identity and true character of the publication.

Under the history and the circumstances of the Ogilvie publication, including the fact that a dictionary was at one time put out with the name of Ogilvie as agent for the publisher, we think it reasonable to conclude that the title page and the imprints upon the backs, although containing the name of Ogilvie, were ingeniously planned with the idea of not giving a clear and definite designation of identity, but of leading those who casually examine into the supposition that they are getting the Webster Dictionary of which they have heard and read in years gone by.

It seems to us that Ogilvie was not content with using the word "Webster," which was at large as a word entitled to be used in connection with a dictionary, but purposely used words of description calculated to lead the ordinary purchaser to suppose that he was getting the publication which had been built up by the Merriams. This, we think, was an appropriation of something which he was not entitled to appropriate, and under the circumstances amounts to unfair competition.

The presence of an inequitable purpose is necessarily an element of great weight in the determination of a question of fairness in trade. And where another avails himself of the principle of public dedication, he must in good faith fully identify his production and clearly disassociate his work from the work of the one who has given significance to

Digitized by Google

the name and sufficiently direct the mind of the trading public to the fact that, though the thing is of the same name, that it is something produced and put upon the market by himself.

Use of a manufacturer's or producer's true name alone would not always suffice as an unmistakable designation, and especially where artifice and bad faith are present. Suppose, for instance, that another Gillette of precisely the same name as the one who has so extensively advertised his "Gillette Safety Razor" should, for the purpose of reaping the fruits of the original Gillette's advertising and reputation, put upon the market a different razor under descriptions and phrases calculated to lead the ordinary purchaser to suppose that he was buying the original Gillette razor, his competition would not be made fair by simply appending his own true name which is identical with the name of the Gillette who built up the reputation. This principle is recognized in International Silver Co. v. Rogers Co. (C. C.) 110 Fed. 955, and, though it only applies to an extreme situation, it illustrates the idea that the designation must be efficient and ample under the particular circumstances of a given situation.

While appending Ogilvie's name was doubtless intended as a technical compliance with the condition upon the public right to use the name "Webster," it was not intended that it should operate to wholly overcome the influence produced upon the public mind by the phrases descriptive of the Merriam publication. It is quite apparent that the intended effect of the whole was something contrary to that idea.

The decree of the Circuit Court with respect to the injunction against the Merriam Company is affirmed.

The decree of the Circuit Court for an injunction against Ogilvie in respect to circulars and advertisements is affirmed, and the case is remanded to that court with directions that the injunction against George W. Ogilvie, his agents, attorneys and servants, be so enlarged as to include the title pages and the backs of the dictionaries in the present form, or in any form calculated to deceive members of the public into purchasing his dictionary under the belief that it is a Merriam Webster's Dictionary, and for further proceedings not inconsistent with the opinion passed down this day. All questions of accounting, including the question whether or not the Merriam Company is entitled to an accounting, are open to the Circuit Court. Neither party recovers costs in this court.

NOTE.

Names of Books or Other Publications as Trade-Marks or Trade-Names.

[a] (U. S. 1904) A person publishing a magazine under the name "Comfort" has a trade-name in such title, which is infringed by the use of the name "Home Comfort" for a magazine. Decree, Gannett v. Ruppert (C. C. 1902) 119 Fed. 221, reversed.—Gannert v. Rupert, 62 C. C. A. 594, 127 Fed. 962.

[b] (U. S.) There is no characteristic of a trade-mark in the words "Webster's Dictionary," or in the form or size of that work as usually printed by G. & C. Merriam, such as to prevent its use by others in publishing old editions on which the copyright has expired.—(1891) Merriam v. Famous Shoe & Clothing Co. (C. C.) 47 Fed. 411; (1892) Same v. Texas Siftings Pub. Co. (C. C.) 49 Fed. 944.

Digitized by Google

[c] (U. S. 1894) The words "Social Register," as applied to a list of persons resident in a certain locality, compiled by its publisher with reference to the personal and social standing of such persons, constitute a valid trade-mark, and their use by the publisher of a competing list will be restrained.—Social Register Ass'n v. Howard (C. C.) 60 Fed. 270.

[d] (Ill.) Where a person has, by contract with the author, become the owner of the exclusive right to produce a play based on a character created in a book by such author, and has adopted a name for such drama as his trade-mark to distinguish it from all other productions, plays, or dramas, he has the exclusive right to produce, perform, and represent such drama under such title.—(1902) Hopkins Amusement Co. v. Frohman, 103 Ill. App. 613, judgment affirmed (1903) 67 N. E. 391.

[e] (Mo. 1907) There can be no exclusive ownership of words constituting a trade-mark apart from the use thereof to a vendible commodity, and, for one to have a proprietary interest sufficient to support an action protecting the right, the mark must have been affixed to the commodity for a sufficient length of time to have obtained for it a reputation associated with the mark which identifies its manufacture.—Grocers' Journal Co. v. Midland Pub. Co. (App.) 105 S. W. 310.

[f] (Mo. 1907) A trade-mark exists in the title of a newspaper.—Grocers' Journal Co. v. Midland Pub. Co. (App.) 105 S. W. 310.

[g] (N. Y. 1868) The principles upon which equity enjoins a defendant from imitating the plaintiff's trade-marks do not apply to the publication of newspapers, except so far as to protect the proprietor of a paper in the use of the name adopted by him for such paper.—Stephens v. De Conto, 4 Abb. Prac. (N. S.) 47.

[h] (N. Y.) The publication of a series of stories entitled "Old Sleuth Library," and purporting to relate the adventures of a detective called "Old Sleuth," does not entitle the publisher to an exclusive right to the use of the word "Sleuth" in the titles of stories about detectives.—(1891) Munro v. Tousey, 129 N. Y. 38, 29 N. E. 9. CONTRA, see (1890) Munro v. Beadle, 55 Hun, 312, 8 N. Y. Supp. 414, reversing judgment (Sup. 1888) 2 N. Y. Supp. 314.

(161 Fed. 911.)

PENNSYLVANIA CO. v. SCOFIELD et al.

(Circuit Court of Appeals, Third Circuit. May 18, 1908.)

No. 11.

1. DEATH—ACTION FOR WRONGFUL DEATH—PENNSYLVANIA STATUTE.

Under the Pennsylvania statutes of 1851 (P. L. 674, § 19) and 1855 (P. L. 309), giving a right of action for wrongful death, as construed by the Supreme Court of the state, the expectation of pecuniary benefit from the life of the deceased gives a right of recovery to the relatives named in the statute, and it is not necessary that the plaintiff should have been dependent upon or have had a legal claim upon the services of the dedeceased.

2. COURTS—JURISDICTION OF FEDERAL COURT—ACTION FOR WRONGFUL DEATH.

Whether a nonresident is entitled to maintain an action for wrongful death under a state statute is a question which goes to the defense of such an action, and does not affect the jurisdiction of a federal court therein.

In Error to the Circuit Court of the United States for the Western District of Pennsylvania.

See 149 Fed. 601.

Digitized by Google

J. Ross Thompson and Samuel G. Thompson, for plaintiff in error.
J. R. McQuigg and J. B. Cessna, for defendants in error.

Before DALLAS, GRAY, and BUFFINGTON, Circuit Judges.

BUFFINGTON, Circuit Judge. In the court below Scofield and wife, citizens of Ohio, sued for damages sustained by them by the death of their son, caused by the railroad's alleged negligence. The plaintiffs based their claim on the Pennsylvania statutes of 1851 and 1855, viz.:

"Whenever death shall be occasioned by unlawful violence or negligence, and no suit for damages be brought by the party injured, during his or her life, the widow of any such deceased, or, if there be no widow, the personal representatives, may maintain an action for and recover damages for the death thus occasioned." P. L. 674, § 19.

"The persons entitled to recover damages for any injury causing death, shall be the husband, widow, children or parents of the deceased, and no other relative; and the sum recovered shall go to them in the proportion they would take his or her personal estate in case of intestacy, and that without liability to creditors." P. L. 309.

The case resulted in a verdict and judgment for the plaintiffs, whereupon the railroad sued out this writ of error.

The decedent was an unmarried adult, and made his home with his parents. He and his father were architects. The son worked for his father, and at the time of his death and for some years previously had, beyond withdrawing a small part for his personal expenses, given his earnings to his father. There was evidence in his declarations that he purposed continuing this course. The parents were possessed of means, and the son's earnings neither went to nor were required by the parents for support. The court below refused a point of the railroad that if "the jury find from the evidence that the plaintiffs have ample means of their own for their support, not depending on the deceased son, Donald C. Scofield, for maintenance or support, he being of full age, and the plaintiffs not having the right to claim loss of service per quod amisit servitium, the plaintiffs cannot recover," and affirmed a point of the plaintiffs that:

"It is not necessary, in order to recover in this case, for the plaintiffs to show a legal claim on their son for support; neither is it necessary for them to show that they are dependent upon him for support. Their right to recover, if at all, depends upon the pecuniary loss they have sustained, and not upon a legal claim for support or upon dependency."

In so doing, the court below committed no error, for it followed the construction given the acts in question by the Supreme Court of Pennsylvania. That court has held that the existence on the part of plaintiff of a reasonable expectation of pecuniary benefit from the deceased, and not necessarily support and maintenance, was the ground of recovery under the statute. This construction of the statute, first announced in Pennsylvania R. R. v. Adams, 55 Pa. 499, has been followed in later cases, among which we may refer to North Penn Company v. Kirk, 90 Pa. 17, and Stahler v. Reading Ry. Co., 199 Pa. 383, 49 Atl. 273, 85 Am. St. Rep. 791. That construction is briefly summarized by that court in the statement that:

Digitized by Google

The words 'parent' and 'children' in the act of 26th April, 1855, are used to indicate the family relation in point of fact, as the foundation of the right of action, without regard to age; and 'if there be a reasonable expectation of pecuniary advantage from a person bearing the family relation, the destruction of such expectation by negligence occasioning the death of the party from whom it arose will sustain the action.'"

On the question whether a right of action was conferred by the Pennsylvania statute on the plaintiffs, who were citizens of Ohio, it suffices to say it was not raised in the court below and is not properly before us on any assignment of error. The question is one of defense, and not of jurisdiction (Venner v. Great Northern Ry., 209 U. S. 24, 28 Sup. Ct. 328, 52 L. Ed. 666; Illinois Central R. R. Co. v. Adams, 180 U. S. 34, 21 Sup. Ct. 251, 45 L. Ed. 410), and upon it we express no opinion.

Finding no error in the action of the court below, this judgment is affirmed.

(161 Fed. 913.)

HELLMAN v. GOLDSTONE.

(Circuit Court of Appeals, Third Circuit. May 14, 1908.)

No. 4.

BANKRUPTCY—DISCHARGE—EFFECT—ENFORCEMENT OF JUDGMENT—INJUNCTION.

Whether a judgment against one who is thereafter adjudged bankrupt is thereby discharged is properly raised by pleading the discharge in a proceeding to enforce the judgment, and not by petition in the bankruptcy court to enjoin the judgment creditor from enforcing it.

Petition for Revision of Proceedings of the District Court of the United States for the District of New Jersey, in Bankruptcy.

David E. Goldfarb, for appellant.

Hays & Hirshfield and Horace Stern, for appellee.

Before DALLAS, GRAY, and BUFFINGTON, Circuit Judges.

BUFFINGTON, Circuit Judge. This is a petition of Henry Hellman to review an order in bankruptcy made by the District Court of New Jersey. On June 2, 1904, one Goldstone recovered a judgment against Hellman in a municipal court, which by the filing of a transcript thereof in the Supreme Court of New York on June 3, 1904, became a judgment therein. On June 28, 1904, Hellman was adjudged bankrupt in the court below, and on October 24, 1904, obtained from said court his discharge. On October 12, 1906, he petitioned the Supreme Court of New York to cancel Goldstone's judgment by reason of his having obtained such discharge in bankruptcy. On October 30, 1906, that court, after hearing, denied the defendant's motion to cancel the judgment. Of such order Hellman sought no review, but on February 19, 1907, petitioned the court below to enjoin Goldstone from proceeding to enforce the judgment. This the District Court, by its order of April 3, 1907, declined to do, and to review its order dismissing such proceeding Hellman petitioned this court.

We are of opinion the court below was right. The question whether a judgment against one who is thereafter adjudged bankrupt is

Digitized by Google

thereby discharged is properly raised by pleading the discharge in a proceeding to enforce the judgment. In re Wright, 2 Ben. 509, Fed. Cas. No. 18,065. Presumably the court in which such discharge is thus pleaded will accord it due legal effect, and if it does not the bankrupt's remedy lies in a review of such action by the proper appellate tribunal, or ultimately in the federal court for denial to him of a right under a law of the United States. Dimock v. Revere Copper Company, 117 U. S. 565, 6 Sup. Ct. 855, 29 L. Ed. 994.

The petition in the present case is therefore dismissed, at petitioner's cost.

(161 Fed. 914.)

VOLLMER et al. v. McFADGEN.

(Circuit Court of Appeals, Third Circuit. May 14, 1908.)

No. 36.

BANKRUPTCY—PRIORITY—CLAIM FOR RENT.

Where property of a bankrupt, a part of which was subject to a landlord's lien and a part not, was sold together in gross without objection, the proceeds cannot be apportioned, so as to entitle the landlord to priority of payment from any part thereof.

Appeal from the District Court of the United States for the Eastern District of Pennsylvania.

For opinion below, see 156 Fed. 715.

Adrien W. Vollmer, for appellants.

W. Horace Hepburn, William A. Carr, Sidney L. Krauss, and W. Horace Hepburn, Jr., for appellee.

Before MOODY, Circuit Justice, and DALLAS, GRAY, and BUFFINGTON, Circuit Judges.

BUFFINGTON, Circuit Judge. In the court below the landlord claimed priority for rent accrued before the filing of the bankrupt's involuntary petition. That court sustained the refusal of the referee to so award, whereupon the landlord appealed to this court.

The fund for distribution arose from the gross sum of $7,000, the purchase price of the fixtures of the bankrupt's bar, a term of years for his premises, and the license to sell liquors thereat. The referee found as a fact, and the court adopted such finding, that the landlord gave notice at the sale to the purchaser that he would hold him responsible for the rent in arrear. The sale in gross of these different items was made and confirmed on notice to the landlord and without objection. He now contends that a license to sell liquors is a personal privilege and cannot be legally sold, and therefore the fund must be treated as the proceeds of the fixtures and of the term of years, upon both of which he claims a lien. Upon these questions we express no opinion. The gross price for which these items were sold constitutes such a commingling of the three items as brings the case within the ruling in Keyser v. Wessel, 12 Am. Bankr. Rep. 126, 128 Fed. 281, 62 C. C. A. 650, where on a commingling of like items this court held it was impossible "to determine the proportional value of the particular part bound by the liens to the gross purchase price."

The order of the court below is affirmed.

Digitized by Google

(161 Fed. 733.)

D'ARCY v. STAPLES & HANFORD CO.

(Circuit Court of Appeals, Sixth Circuit. May 19, 1908.)

No. 1,739.

1. PATENTS—EFFECT OF PRIOR ADJUDICATION—PERSONS AND MATTERS CONCLUDED.

A decree adjudging the validity and infringement of a patent in a suit defended by the manufacturer of the infringing device, who, although not a party to the record, had complete charge and control of the defense, is conclusive upon him, in a subsequent suit brought against him by the same complainant, as to all matters of fact and law necessarily litigated and determined, which include the validity of the claims involved and infringement by the particular device in suit; but such decree is not conclusive on the question of infringement by other devices which may fairly be differentiated from the one in suit.

[Ed. Note.—For cases in point, see Cent. Dig. vol. 38, Patents, §§ 622-625.

Operation and effect of decision in equitable suit for infringement, see note to Westinghouse Electric & Mfg. Co. v. Stanley Instrument Co., 68 C. C. A. 541.]

2. JUDGMENT—CONSTRUCTION—REFERENCE TO OPINION.

Where a decree is general in its terms, an opinion filed by the court may be taken into consideration for the purpose of determining definitely what questions were presented and decided.

[Ed. Note.—For cases in point, see Cent. Dig. vol. 30, Judgment, §§ 967-970.]

3. PATENTS—CONSTRUCTION OF CLAIMS—SUBSEQUENT PATENT TO SAME PATENTEE.

A second patent applied for by and granted to a patentee for a device for the same purpose, but different in form from one shown in an earlier patent, may be taken into consideration in construing the earlier patent, as affording a presumption that it did not broadly cover other forms than the one described.

4. SAME—INVENTION.

There is no invention in making two parts of one thing or one part of two, when by such change no different result is attained.

[Ed. Note.—For cases in point see Cent. Dig. vol. 38, Patents, §§ 15-29.]

5. SAME—INFRINGEMENT—SPRING SUPPORTS.

The Staples patent, No. 474,536, for spring supports for chair seats, etc., is not for a pioneer invention, but, in view of the prior art, is limited to the particular structure shown and described. Claims 1 and 3 *held* valid and infringed as to one device made by defendant, upon a prior decision binding on the parties, but not infringed by a second device in suit.

Appeal from the Circuit Court of the United States for the Western District of Michigan.

See 148 Fed. 19, 78 C. C. A. 493.

The appellee, who was plaintiff in the court below, filed this bill, complaining of the infringement by the appellant of rights secured by letters patent No. 474,536, issued May 10, 1892, to J. A. Staples, for the invention of an improvement in supports for chair-seat springs, which rights the plaintiff claims to have acquired by assignment from the patentee. Three claims were made in the patent, of which the first and third only are involved in the present controversy. The case came here in 1906, upon an appeal of the defendant from an order granting a preliminary injunction. This court, without expressing any opinion upon the merits, but finding there was no such abuse of the discretion of the court below as would justify any modification

Digitized by Google

of the order granting the injunction, affirmed it. D'Arcy v. Staples & Hanford Co., 148 Fed. 19, 78 C. C. A. 493. The report erroneously gives the names of the judges of the First Circuit as the judges sitting, instead of naming the judges of the Sixth Circuit, as it should have done. Thereupon further proceedings were taken in the court below, and at the final hearing upon pleadings and proofs a decree was entered sustaining the first and third claims of the patent, and declaring the infringement thereof by certain of the structures made and sold by the defendant, and noninfringement by others which are specified. The defendant has appealed from that decree. The plaintiff has not appealed.

F. L. Chappell, for appellant.
F. P. Warfield, for appellee.

Before LURTON, SEVERENS, and RICHARDS, Circuit Judges.

SEVERENS, Circuit Judge, having made the foregoing statement of the nature and history of the case, delivered the opinion of the court.

It is alleged in the bill of complaint that prior to the commencement of this suit the complainant had filed a bill in equity in the Circuit Court of the United States for the District of Massachusetts against one Charles H. Lord, a citizen of that state, charging him with infringement of their said patent by the use and sale of spring supports manufactured and sold to him by D'Arcy, the defendant in the present suit, and that the constructions now complained of "are identical in all essential features with those in controversy in the said suit above mentioned against Charles H. Lord." It is further alleged that the suit was proceeded with and was brought to hearing upon pleadings and proofs; that thereupon the court rendered its opinion, sustaining the validity of the first and third claims of the patent, and finding the infringement thereof by the defendant, Lord; and that the court entered a decree in accordance with its said opinion. The bill then proceeds as follows:

"Your orator further avers that thereafter the said defendant, Charles H. Lord, who was defended in all respects by the defendant herein, Frank P. D'Arcy, who had assumed entire control of the said suit, filed a petition for a rehearing, which said petition, after due consideration thereof by the court, was denied."

The answer of the defendant admits the commencement of the suit in Massachusetts and the prosecution thereof to a final decree as alleged in the bill, and further, admits that one of the structures here in controversy is essentially the same as the one held to be an infringement in the former case, but avers "that the other structures here in controversy are essentially different from the structure there held to be an infringement." The answer makes no response to the allegations of the bill touching the participation of D'Arcy in the defense of the Lord suit.

It is urged by the complainant, now appellee, that D'Arcy, by having taken up the defense of his vendee, Lord, and conducted it as if it were his own, is estopped by the decree. This is the mainstay of the appellee's position in argument on this appeal. If this position depended upon the allegations of the bill, it would be difficult to support it. The bill does not allege, at least with any sufficient certainty, that

Digitized by Google

D'Arcy was given control of the defense at the beginning, when he could have employed his counsel, shaped the answer, and conducted the examination of the witnesses and the production of other proof, so as to fully exhibit the defendant's case, and, incidentally, his own. But in the course of taking the testimony in this case before the examiner the defendant's counsel made the following admission, which was taken down:

"Defendant admits by his counsel that Frank P. D'Arcy, defendant herein, took charge of the defense in the suit of Staples & Hanford Company v. Charles H. Lord, in the Circuit Court of the United States for the District of Massachusetts, and defrayed the expense thereof, but that said Frank P. D'Arcy made no move to become a party to the said suit, was never asked to become a party by the complainant or any one else, and did nothing more than to protect the interests of said defendant, Charles H. Lord, and hold him harmless as to any decree that might be or was entered against him."

And Lord himself testified:

"That after the bill was filed in that suit he (Lord) had nothing whatever to do with the conduct thereof, but the entire case was turned over to the D'Arcy Spring Company, which is the business name of the defendant D'Arcy, and that said D'Arcy had entire charge of the defense."

Lord's testimony further shows that:

"He did this in view of correspondence between D'Arcy and Lord and D'Arcy and Nelson, Lord's attorney, to the effect that D'Arcy would take charge of the suit against Lord, providing he should have 'complete control of the litigation.' "

The foregoing admission of counsel and the testimony of Lord were put into the case without any objection founded upon the pleadings. The allegations of the bill were defective in this regard. Nevertheless, it is not the case of an entire want of pleading, and there is some show of an attempt to plead that D'Arcy undertook and carried on the defense for Lord. In these circumstances we think it cannot be doubted that he is concluded by the decree in respect to all questions of law or fact which were necessarily litigated and determined in that suit. They are matters finally adjudged as between the parties to the present suit. Lane v. Welds, 99 Fed. 286, 39 C. C. A. 528; Penfield v. Potts & Co., 126 Fed. 475, 480, 61 C. C. A. 371.

We are next to inquire what questions were definitely settled in the former adjudication, and upon which the estoppel rests. The principles by which we are to be guided are clearly stated and defined by numerous decisions of the Supreme Court, from which we might select for a beginning the cases of Cromwell v. Sac County, 94 U. S. 351, 24 L. Ed. 195, and Russel v. Place, 94 U. S. 606, 24 L. Ed. 214. Before referring to these and other cases we should premise that the infringement here complained of is another infringement than that which constituted the cause of action in the Lord Case, and the estoppel is not the same as that which arises where the identical cause of action is sought to be relitigated. The questions to which the estoppel relates are questions which were incident to and involved in the former suit. This distinction is clearly marked in the opinion of the court in Cromwell v. Sac County, supra. It is desirable, also, to state certain facts concerning the former suit, in order to ascertain the application of

Digitized by Google

the rules of law which govern the subject. The patent was for a support for springs in upholstery, such as chairs, sofas, bed bottoms, and the like. The spring support proposed by the patent, as shown in the drawings, comprised two forms, each consisting of a single wire, of sufficient strength to uphold the springs, and extending from the top of the frame of the chair, etc., on one side, down and under the bottom of the springs, and then up to the top of the frame on the opposite side. Along the nearly horizontal portion of this wire, in the first form shown, horizontal coils were formed of the wire at proper distances apart to receive the straight stem of a wire spring in the form of an inverted cone. This was the adaptation for supporting the spring. Fig. 2 of the patent illustrates this form of support and springs assembled thereon.

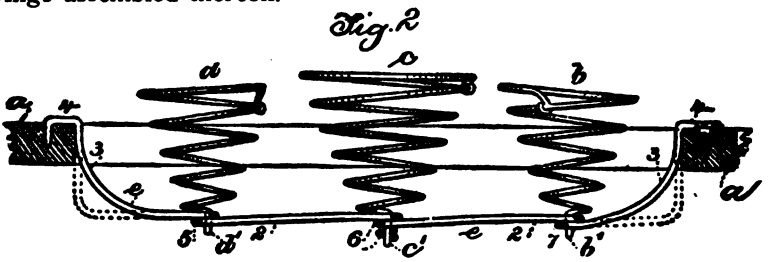

2, 2, and 3, 3, is the spring support which is the subject of the patent. b′, c′, and d′ are the stems of the springs going down through the coil of the supporting wire. c′ shows underneath a like coil in a cross supporting wire, in cases where a cross-wire is used. The dotted lines below at the right and left hand represent a conformation of the spring support to adapt it to different widths of bed bottoms. In another form of spring support the horizontal part is shown in vertical "corrugations," as they are called; that is, in short, abrupt bends, in which a hook formed of the stem of the spring turned upward, then outward, and then downward, rests. This latter corrugated form of the support is the subject of the second claim of the patent and is not here involved, except as it may aid in interpreting the first and third claims. It may be noted here that this scheme of a spring support contemplates a single wire centrally supporting the spring at its apex, and not two parallel supports for the same spring, though in the second form, where an hour glass form of spring may be used, the outer coils of the spring may be rested in the corrugations of the spring support. In the Lord Case the structure which was held to offend consisted of a wire spring support, otherwise like that of the patent, but at the connection with the spring the wire was bent upward in the form of a loop, and this loop was bent in the form of a hook over the outer coil of an hour glass spring. When the springs and their supports were assembled, these hooks, going over the wires, would hold the springs in their places. But the hooks were not closed over the coils of the springs, and it was therefore easily possible to engage and disengage the entire structure by mere manipulation. So the parts might be shipped to the retailer in packages put up more compactly, in the "knock-down" as it is called, and be by him assembled in the

Digitized by Google

proper relations for the ultimate purchaser, thus saving considerable expense in the cost of transportation.

After the decree was entered the complainant sought to reopen it and allow it (the complainant) to prove another infringement by the use and sale by defendant of another spring support which did not contain a bend in the wire, but was connected with the springs by independent wire fastenings. The court refused to reopen the case, holding at once that this was not an infringement. In the present case one of the alleged infringing spring supports is identical with that held to infringe in the Lord Case. The pleadings and decree in the Lord Case were general, declaring simply that the defendant had infringed. There is nothing, therefore, in them which indicates with precision what kind of a spring support was held to infringe. But the Circuit Court filed an opinion, and this opinion was adopted as its own by the Circuit Court of Appeals on appeal to that court. 148 Fed. 16, 78 C. C. A. 167. And we think that we may, and should, refer to the opinion to definitely ascertain what questions were presented to the court and decided by the decree. Stearns v. Lawrence, 83 Fed. 738, 28 C. C. A. 66; Corcoran v. Canal Co., 94 U. S. 741, 24 L. Ed. 190; Last Chance Min. Co. v. Tyler Min. Co., 157 U. S. 690, 15 Sup Ct. 733, 39 L. Ed. 859. From that we learn that a certain specific structure was held to infringe, and no other. That structure is identified as being one of the structures alleged to infringe in the present case. Upon these facts we think the court below rightly held that the defendant was precluded by the former decree from denying the validity of the patent, and was also precluded from denying that the use and sale of the particular spring support involved in the adjudication was an infringement of the patent in suit.

But the court below in the present case went on to hold and decree that another form of spring supports used by the defendant was also an infringement and that certain others were not. And the appellee here contends that this one of the other forms was rightly held to be an infringement by force of the former decree. We say "this one." because it was the only other form which the complainant assailed. and it complains that the others were pressed into the case by the defendant in the shape of structures patented to the defendant by later patents. As the complainant was entitled to dominate the litigation so far as its own case was concerned, we think it might justly complain of any attempt to make an issue of other matters than those which the complainant had put in issue by its proof. It may be, however, that the defendant might introduce his later patents for the benefit of the presumption arising from the grant of them that these additional forms were not regarded in the Patent Office as covered by the former patent to Staples. This might depend upon the question whether they were patents for original inventions, or mere improvements on others. The court below, however, seems to have regarded all the defendant's spring supports as before it for direct adjudication. But the complainant did not appeal. This limits our review to the one which was the subject of the controversy in the Lord Case, and the other form of spring support which the complainant assails as an infringement. And to this latter form we shall now direct our attention.

Digitized by Google

It is contended by the appellee that the form we now purpose to consider is plainly an equivalent to, if not the same thing as, the spring support which was held to infringe in the former suit. To lay the foundation for this contention it is urged, and we are warned in the brief to observe, that the Staples invention is a pioneer in this art, and dominates all similar forms of spring supports, of which this of defendant's is one, and that the effect of giving this character to the spring support is to broaden the estoppel of the former decree. Prima facie we should hardly expect this claim to be well founded, in view of the fact that, as appears, more than 150 patents have been granted in this country for chair, sofa, and bed bottoms composed of wire springs and various forms of supports. And when we come to examine such of them as are presented by this record, we find that the art was so full of such structures as to utterly preclude the possibility of attributing to the Staples invention the broad character claimed for it. At most, and so much we are bound by the decree in the Lord Case to concede to it, it stands for the particular forms of spring supports which are shown in the description of his invention in the specifications, illustrated by the drawings of the patent. Duff v. Sterling Pump Co., 107 U. S. 636, 639, 2 Sup. Ct. 487, 27 L. Ed. 517. The claims must be restricted to the particular spring support described, as, if construed more broadly, they would be void because anticipated. The court in the Massachusetts case expressed a doubt of the presence of invention, in which we share. With regard to the scope of the estoppel of the former decree, we think it extends no further than to establish that the particular form of spring support which was the subject of the controversy is an infringement of the complainant's patent. It cannot be extended to other forms by inference or argument, as, for instance, that another form should be regarded as an equivalent, for at once the question arises for debate whether it is so. We do not mean to say that the burden of an estoppel may be escaped by pointing to wholly unimportant differences, as of the color of things, minute variations of form, or other characteristics, which nevertheless leave no question of identity. It is axiomatic that an estoppel must be certain, and "it is of the essence of estoppel by judgment that it is certain that the precise fact was determined by the former judgment." De Sollar v. Hanscome, 158 U. S. 216, 221, 15 Sup. Ct. 816, 818, 39 L. Ed. 956. It was not necessary to determine in the former suit whether this form of support was an infringement. In fact, no issue was made upon it or decided.

The defendant's spring support, with which we are now dealing, though not in other respects materially differing from that which was held in the Lord Case to infringe, contains a bend in the wire which connects with the spring, not by an open hook, but by a rigid engagement with a coil of the spring, which prevents freedom of action between them, and also prevents disengagement by mere manipulation, and requires a mechanical change of form before the spring and its support can be disengaged. This might be thought to be a small matter of difference from the form having an open hook in the spring support. But the whole field of the art, as shown by the numerous prior patents, was filled with trifling differences, and the advance

Digitized by Google

made by the Staples invention was not greater than the difference between this spring support of the defendant and his own. What is apparently a matter of small difference proves to be of much importance in the organization of the springs and their supports. The history of the art, shown to some extent later on, indicates that inventors and manufacturers esteemed it a great advantage to secure the spring at its base in a rigid upright position, for thereby the necessity of cross-wires in the upper part of the spring was obviated either wholly or in large part. When cross-wires are depended upon for staying the springs, they are much subject to derangement and breakage from the strains put upon them in varying directions when in use. So small a difference in Topliff v. Topliff, 145 U. S. 156, 12 Sup. Ct. 825, 36 L. Ed. 658, as the turning of a link from an upright to a horizontal and partly suspended position was held to give validity to a patent because of the advantage thereby secured. And see a case relating to bed bottoms in Simmons Mfg. Co. v. Southern Spring Bed Co., 140 Fed. 606, 72 C. C. A. 174, decided by the Sixth Circuit Court of Appeals. We have some difficulty in finding how the court reached the conclusion in the Lord Case that a spring support engaging by a hook with a coil of the spring was the equivalent of the device of the Staples patent, and are led to suppose that the progress which had been made in the art at the date of this invention was not so fully disclosed by the evidence in that case as it is by the proof in this. This is not said, however, with any purpose to derogate from the binding force of the judgment there rendered. But, giving due effect to that decision, we do not think it extends to a device which can be differentiated from the spring support held to infringe in that case. Assuming this to be so, we proceed to state our views upon the question whether this other form of spring support which the appellee complains of should be held to be an infringement. As already intimated, we think it clear that the appellee's patent can only be sustained for the particular forms of spring supports therein described, and that the claims must be narrowed accordingly in order to save them.

There was nothing new in a spring support suspended in the frame of chairs, sofas, beds, or other like structures, nor in making it of wire instead of other material, nor in the mode of its attachment to the top of the frame, nor in making bends in the wire for securing and supporting the springs at the properly spaced places, and thereby preventing them from moving laterally on their supports. Staples in his application gave credit to the former art to the extent of saying that it had been common to use crossed bands of webbing nailed to the frame of the seat for the purpose of supporting the springs, and also to use bands of metal secured to the seat frame for the same purpose. These forms of spring supports he gives reasons for discrediting. But he stops there, and thereupon proceeds to describe his own invention as of a spring support made of wire suspended in the frame, having a horizontal portion under the springs and having the ends secured upon the top of the frame by turning the end at a right angle, drawing it to a point, and driving it into the frame, or making an eye at the end of the wire and driving in a nail or screw. To adapt the wire to receive the springs he made coils in it, or corrugated it, as already ex-

Digitized by Google

plained. In the form covered by claims 1 and 3, here involved, it is obvious that there is nothing to prevent the springs from sagging or tipping over in any direction, for he only has the one wire for a row of springs. Other means must be employed to maintain the upright position of the springs, as by cross-wires or cords, which would have to bear the stress and strain of the use of the bed, sofa, or chair, etc. Perceiving this defect pending his application for the patent, he filed another application for a patent for a spring support in which he used intersecting or crossing corrugated wires meshing at the crossings, so that the upper bends in one should lie in the lower bends of the other. By turning the lower end of an inverted conical spring under the corrugations of one wire and over those in the other, the spring became fixed in a rigid, upright position. He gives in stating his object in making this invention, that in other forms, some having two parallel wires, and some one, the springs were liable to displacement by turning sidewise or rotating upon the supporting wires; and a patent was granted to him on that application. We refer to this patent for two purposes: First, to show that Staples did not then conceive that his other application would cover all forms of spring supports suspended in a frame and having bends in the wire adapted to secure the springs; and, second, because in this he confesses his familiarity with wire supports, both in the forms of a single wire, and of two parallel wires; and, third, because the granting of this patent affords a presumption that the patent in suit did not cover other forms of spring supports having bends in the wire than the one described in this, his former patent. Miller v. Eagle Mfg. Co., 151 U. S. 186, 208, 14 Sup. Ct. 310, 38 L. Ed. 121.

In making a statement of several previous forms of supports for springs in similar structures we shall pass by old forms of band webbing and flat strips of metal attached to the frame and suspended therein, noting merely that in a patent to Ingersoll, granted in 1870 for a chair bottom, there is shown a metallic strip suspended in the frame, having the ends attached to the top of the frame and supporting an inverted cone-shaped spring "centering in and resting at its lower end on the metal strip." This was the only means for supporting the spring in the chair bottom.

A patent granted to Smith in 1882 for a bed bottom shows the spring supports, called "ties," made of wire, attached at each end of the frame, and loops or bends in the wire, called "hooks," at fixed distances apart, and adapted to receive the coil of the spring at the end thereof, and, bending over it, secure it in its place. The patentee says these cross-ties are "crimped to form loops * * * which are made to engage with the springs by passing the loops partly around the upper coils, b, of the springs," and further says that "this system of ties and hooks is used at the top and at the bottom of the bed bottom." The ties form the only support for the springs, and the engagement of the spring support with the coil of the spring holds the spring from slipping upon the wire.

In a patent granted to Purefoy in 1883 two parallel spring supports run under each row of the springs from end to end of the bed bottom. They have vertical loops to receive the lower coil of the

Digitized by Google

spring, but, instead of being bent over it, are secured thereto by passing a short piece of wire under the loops and over the coil of the spring. These base pieces, says the patentee, "may be made of wood or metal in any suitable form; but it is deemed most advantageous to construct them of wire, and such construction itself forms part of the invention." And he says that his base pieces may be made integral with the springs, a form which the defendant employs by rigidly attaching them together. In this instance the spring supports did not carry the weight of the bed bottoms, as in some earlier structures, but rested upon slats extending underneath.

In figure 3 of a patent issued to Platt in 1884 is shown a bed bottom in which the apex of the spring is straightened out into a stem, precisely as in the figure of the Staples patent above shown. This stem is carried down into a hole in a wooden slat, which is attached at its ends to the frame and forms the spring support. The association of the spring and its support is precisely the same as that shown in the Staples patent in suit, only that the coil in the one provides the hole for the stem of the spring which is provided in the wooden support of the other.

A patent to Heller granted in 1885 shows a similar mode of supporting the springs. The apex of the spring is formed into a stem, and this is driven down into a hole in the spring support, which is here also of wood. Heller reinforced this construction by cross-links or rods tying the springs together at their lower coil, and extending from one side to the other of the frame, thus securing the springs in an upright position. Fig. 3 of this patent shows the ends of these cross-rods bent down and driven into the frame, and, in another figure, secured by a staple on the frame; and he explains how all the parts can be readily folded and compacted for storage or transportation.

In a patent to Mellon of December 1, 1885, the spring supports are of wire, extending from side to side or end to end of the frame, and secured thereto by coiling the ends around the frame. Bends or loops are formed in the wire at the place where the springs are to be set on, and these bends are carried over the lower coil of the spring and secured there by a stem extending laterally from an adjacent spring. The stem passes over the loop and under the coil of the spring. It is obvious that this engagement securely holds the spring from slipping on the wires. It is not liable to displacement in use; but the patentee says that the parts may be readily disengaged by forcing the joint inwardly, so that the stem of the adjacent coil will be withdrawn from the bend in the supporting wire. This is a self-supporting bed bottom, as they are in all of the patents we are noting, except where we specially note that they rest on another support, and hangs upon the frame. The spring support of this patent fills all the requirements of the first and third claims of the Staples patent, except that in the third claim the specific mode of attachment to the frame is by driving down into the frame a bent portion of the end of the wire, and bending the wires out or in to a different angle, and so making them longer or shorter to accommodate the differing widths of beds. There could be no invention in either of these provisions. The mode of attachment to the frame was no problem for even the commonest mechanic, and the

Digitized by Google

rod, which was one of his own forms, or by making the nail on the end of the rod, as in his other form, were old and common equivalents. There is no invention in making two parts of one thing, or one of two, when by such change no different result is attained. Bundy Mfg. Co. v. Detroit Time Reg. Co., 94 Fed. 524, 36 C. C. A. 375; Eames v. Worcester Pol. Institute, 127 Fed. 67, 73, 60 C. C. A. 37; Standard Caster & Wheel Co. v. Caster Socket Co., 113 Fed. 162, 51 C. C. A. 109; General Electric Co. v. Yost Electric Co., 139 Fed. 568, 71 C. C. A. 552; Howard v. Detroit Stove Works, 150 U. S. 164, 170, 14 Sup. Ct. 68, 37 L. Ed. 1039.

This particular form was used in the Platt patent for securing the ends of the cross-rods to the top of the frame. These cross-rods held the upper ends of the springs in place; but they also served in part to carry the weight of the bed and of the user. And the patent to Heller, Fig. 3, shows the ends of the cross-rods "bent to form a point which is driven into the slat." This "slat" is a cleat secured to the inner side of the bed frame or rail. And so of the accommodating the length of the spring supports to the width of the bed. It was a mere question of construction in every bed bottom suspended in the frame, of which there were many. And it would be perfectly obvious that a wire could be made shorter or longer by bending or straightening it.

Another patent to Mellon, No. 331,523, granted December 1, 1885, shows wire spring supports secured to the ends of the frame and having bends in the wire to engage the spring by bending the loop or bend over the lower coil of the spring, which prevented the spring from slipping on the wire and held the spring upright in its place. Like wire spring supports bent to receive the springs were used in two other patents issued to the same patentee on December 8, 1885, respectively.

A patent to Ames in 1886 shows wire "suspension supports upon which the vertical springs are seated." These wire supports are attached at the end to the upper side of the frame of the bed. How they are to be attached is left to the builder's preference among such attachments.

A patent to Huber in 1888 shows a spring support suspended inside the frame. It consists of a metal strip "bent upward at an angle near either end outside the outer springs to form inclined hangers, and at their extreme outer ends outward and downward to form hooks adapted to engage the upper edges of the respective side bars."

A patent to Leggett, granted in 1890, shows spring supports consisting of "stout or thick wires" attached to the frame at their outer ends and having vertical bends in the wire at the seat of the springs, which prevent the springs from moving on their supports. The supporting wires are crossed and engage the lower coil of the spring.

In a patent to Bone in 1890 is shown a wire spring support attached to the frame by a hook at either end and having bends or loops in the wire to engage the lower coil of the spring by being bent down over it and thus "prevent the tie rod (as the spring support is called) from slipping on said coil and hold the spring in its proper position."

A patent to Rose, applied for in July, 1891, and issued December 31,

Digitized by Google

1891, also shows wire supports attached to the frame and having "vertical shoulders or offsets around which the end coil of the springs are seated and secured."

We have given this somewhat tedious description of some of the former patents to verify the statement that there was no new feature in the first and third claims of the Staples invention, except it be in making a complete coil in the spring support adapted to receive the stem on the apex of the spring. All else was old and common. The patentability of Staples' invention seems to us to rest on fragile grounds, when we come to impose the necessary limitations upon it. The characteristic part of the defendant's spring support, which is supposed to be a reproduction of that of the plaintiff, is found in many specimens of the earlier art, except that the defendant hammers down the bend in the spring support upon the coil of the wire to an extent that it forms a rigid attachment not detachable by mere manipulation.

It is urged that the Staples device has gone into extensive use and has revolutionized the business, and the proof shows that the early forms of spring supports of webbing or flat strips of metal have been discarded. But we are convinced that this is not because of the utility of the limited invention found in the Staples patent, but has come about from the advantages of modern forms of construction, which made use of wire for supports and formed bends in them for locking the foot of the spring upon them, an advantage which could not be attained by the use of webbing, or as well by flat metallic strips.

The decree of the court below will be affirmed, in so far as it declares the first and third claims of the complainant's patent No. 474,-536 to be valid, and in so far as it declares that the making, using, or selling of the spring support, styled therein as "Complainant's Exhibit, Defendant's Model Seat Spring," is an infringement thereof, and also in so far as it awards to complainant damages and profits arising from that infringement, and directs the ascertainment thereof, and enjoins further infringement of that character. The said decree will be reversed in so far as it declares the manufacture, sale, or use of the spring support styled "Defendant's Exhibit No. 7B, Sample of Spring Manufactured by D'Arcy No. 5B," to be an infringement, and awards damages and profits and an injunction thereon. The costs of the appeal will be divided.

Digitized by Google

(161 Fed. 869.)

WESTERN TRANSIT CO. v. BROWN.

(Circuit Court of Appeals, Second Circuit. March 10, 1908.)

INSURANCE—MARINE INSURANCE—RUNNING-DOWN CLAUSE.

A running-down clause of a policy of marine insurance, providing that the insured will reimburse the owner for damages paid "if the ship hereby insured shall come into collision with any other ship or vessel," is intended to protect the insured only in case his ship actually herself comes into contact with the injured ship, and there is no liability thereunder where the insured ship by her suction caused another to sheer and come into collision with a third, although she was held liable in damages therefor in a suit for the collision.

Appeal from the District Court of the United States for the Southern District of New York.

For opinion below, see 152 Fed. 476.

Goulder, Holding & Masten, for appellant.

Wing, Putman & Burlingham (Harrington Putman, of counsel), for appellee.

Wallace, Butler & Brown (F. M. Brown, of counsel), for Manheim Insurance Company.

Before LACOMBE, WARD, and NOYES, Circuit Judges.

WARD, Circuit Judge. The libel is filed upon a policy of marine insurance. The tug Mariposa, with the schooner Martha in tow, coming down the starboard side of a dredged cut about 800 feet wide, was met by the steamers Wilbur and Troy going up. The Wilbur suddenly sheered to port, struck and sank the Martha. In a suit by the owners of the Martha against the steamers Wilbur and Troy to recover damages for the collision both steamers were held at fault. The court found that they were coming up the wrong side of the center of the cut, were racing, and that the Troy kept so close to the Wilbur that she sucked the Wilbur's stern into her own wake, and so caused the Wilbur to sheer to port, carrying her into the Martha.

The policy of insurance contains a running-down clause, the material portion of which is as follows:

"And it is further agreed that if the ship hereby insured shall come into collision with any other ship or vessel or raft, and the assured shall in consequence thereof become liable to pay, and shall pay, by way of damages to any other person or persons, any sum or sums not exceeding in respect of any one such collision the value of the ship hereby assured, we, the assurers, will pay the assured such proportion of such sum or sums so paid as our subscription hereto bear to the value of the ship hereby assured."

Colloquially we speak of a ship as being insured against damage by collision, but what we mean is that her owner is insured against loss arising from damage to his ship caused by collision. This peril was covered by the ordinary marine policy. When it was desired to protect the owner against loss because of his liability for damage caused by his own ship to another ship, the running-down clause was inserted in the ordinary policy. The extent of the underwriters' liability under that clause depends upon its construction; i. e., upon what the parties intended to cover by it. In respect to his legal liability as a

Digitized by Google

wrongdoer, no doubt one is as responsible for striking another with a club in his hand or with a bullet from his gun as for striking him with his fist. So, also, in respect to legal liability under the rules of navigation or in proceedings to limit liability, or under the doctrine of principal and agent, two vessels may be regarded as one. But these principles of law do not depend upon contract, and do not necessarily apply to a contract of indemnity. Whether they apply, and, if so, how far they apply to the running-down clause in a marine policy, depends upon the intention of the parties to the contract. They might have intended to protect the owner against loss because of liability to third parties caused in any way by his ship; or they might have intended to protect the owner in all cases where there was a contact between his ship and the other ship, either direct or by means of a physical connection; or they might have intended to protect the owner only when his ship actually herself came into contact with the injured ship. Presumably the premiums charged would diminish as the risks were diminished.

We entirely approve of the language of Lord Bramwell in his dissenting opinion in the case of The Niobe, reported as McCowan v. Baine (App. Cas. 1891, 401), which was a suit on this very clause:

"I say, then, in very fact, the Niobe did not come into collision with the Valetta, causing a liability in the appellant, and, according to the ordinary primary meaning of the words used, the case is not within them. This is agreed. But it is said that for some reason the primary and natural meaning of the words is to be extended; and that we should hold that there was a collision where there was none. I am at a loss to see why. I think an act of Parliament, an agreement, or other authoritative document ought never to be dealt with in this way, unless for a cause amounting to a necessity or approaching to it. It is to be remembered that the authors of the document could always have put in the necessary words if they had thought fit. If they did not, it was either they thought of the matter and would not, or because they did not think of the matter. In neither case ought the court to do it. In the first case, it would be to make a provision opposed to the intention of the framers of the document; in the other case, to make a provision not in the contemplation of those framers."

If it be supposed that the parties to this policy intended the running-down clause, as in the case first put, to cover any loss the assured sustained because of damage caused by his vessel to another vessel, then, of course, the libelant should recover the amount it has paid. If they intended, as in the second case supposed, to cover any loss caused by damage done either directly or by means of intermediate physical connection, the libelant ought likewise to recover. The Troy caused the Wilbur to sheer into the schooner by sucking the water between her stern and the stern of the Wilbur into her own wake, and we think her owners are as much responsible for this as if she had pulled the Wilbur's stern over by a hawser, or, by contact with an intervening vessel, had pushed her bodily over. The connection by water between the Troy and the Wilbur, though not so obvious, is equally a physical connection.

We think the language of the clause means that the vessel of the assured shall herself come into contact with the injured vessel, and, as the Troy did not come into contact with the Martha, the decree of the court below is affirmed, with costs.

Digitized by Google

(161 Fed. 801.)

SPRINGER v. ST. LOUIS SOUTHWESTERN RY. CO.

(Circuit Court of Appeals, Eighth Circuit. April 4, 1908.)

No. 2,680.

1. RAILROADS—INJURY TO PERSONS ON TRACK—ARKANSAS STATUTE.

Kirby's Dig. Ark. § 6607, providing that "it is the duty of all persons running trains in this state upon any railroad to keep a constant lookout for persons and property upon the tracks," which is construed by the Supreme Court of the state to apply to the running of trains in railroad yards, only requires that the trainmen shall keep a lookout ahead on moving trains, and, where such lookout is properly kept, does not, without more, render a company liable for the death of a person killed in railroad yards who was not seen.

2. SAME—PERSON KILLED IN SWITCHYARD DURING FIRE—CONTRIBUTORY NEGLIGENCE.

A fire started in the daytime in a residence addition of Pine Bluff, Ark., destroying about 100 houses. In endeavoring to save their household goods the residents carried them onto the tracks of the railroad immediately south of the burning district. These tracks were in the switchyards of the company, without any streets or private crossings thereon. During a period of about 45 minutes of the fire the railroad company had run its cars off of the first tracks next to the fire, when the employés, discovering that some oil tanks on the remaining cars were beginning to smoke from the heat of the fire and were in danger of explosion and augmenting the danger of the situation, ran an engine to the end of the cars to push them out. There was an opening in this line of cars of four or five feet, not left under conditions to indicate an invitation to the people to use it as a passway for carrying goods. Just before this movement of the train a switchman went to this opening and adjusted the drawheads for the connection, and gave warning to the people thronging about the place of the intended movement, and then passed down the train to warn persons who were passing over and beneath the drawheads. The deceased, who worked in a mill shop outside of the addition, left his post and went to the fire, and was assisting in carrying a mattress through said opening. He was warned by a third person of the danger just before the accident, and the bell on the engine passing down the open tracks to the rear of these cars was ringing, and continued to ring as the movement of the cars begun. The engineer and his fireman kept a lookout as the movement of the train began, but did not observe the defendant. *Held*, that to the deceased, who was a mere volunteer on its right of way, the company owed no other duty than not to wantonly or recklessly injure him, and his failure to stop, look, or listen directly contributed to his death, and a verdict for the defendant below was properly directed.

[Ed. Note.—For cases in point, see Cent. Dig. vol. 41, Railroads, § 891.]

Adams, Circuit Judge, dissenting.

In Error to the Circuit Court of the United States for the Eastern District of Arkansas.

Charles T. Coleman (Samuel M. Taylor, William D. Jones, George W. Murphy, and William M. Lewis, on the brief), for plaintiff in error.

Nicholas J. Gantt, Jr. (Samuel H. West, Frank G. Bridges, and William T. Wooldridge, on the brief), for defendant in error.

Before SANBORN and ADAMS, Circuit Judges, and PHILIPS, District Judge.

Digitized by Google

PHILIPS, District Judge. This is an action by the administratrix of John I. Springer to recover damages for personal injury to him, resulting in his death, alleged to have been occasioned by the negligence of the defendant railway company. About 2 o'clock p. m. February 13, 1907, a fire broke out in an addition to the city of Pine Bluff, Ark. It was of such character as to destroy nearly 100 houses and drive the inhabitants into the streets and southward onto the railroad tracks of the defendant. Immediately on the south side of this addition, extending along three blocks, were the switchyards of the defendant, running east and west. There was a network of perhaps 12 tracks used exclusively by the railroad for storing and switching its cars. There were no street or road crossings over said tracks. The fire originated in a lot in the westernmost block, bordering on the western end of the switchyard. The fire spread eastward and northeast.

While the evidence tended to show that there were some facilities for the people to pass out to the west, and to the northeast to the ground, known as the "shop property," where the railroad and other shops were located, the readiest mode of escape for the people from the fire area and to carry out their household goods and effects was onto and over the said railroad tracks. Naturally enough, there was intense excitement among the people, hurrying and struggling to save their exposed personal property, which they undertook to accomplish by carrying and tumbling the household goods wherever they could find a place between the net work of railroad tracks. When the fire began to extend eastward, there were cars of various kinds on the tracks next to the lots where the fire raged. Within the first 45 minutes of the fire the danger to the cars became apparent, and the employés of the company had removed from the west to the east the cars off of the first five northernmost tracks. On the sixth track there then stood a train of freight cars, at one point in which the cars were broken, with a space between them of four or five feet. Some of the people, in carrying their household effects to the south, would climb through this train over the drawheads, and others began to pass through the said narrow passageway where the cars stood apart. About this time the yard master or foreman discovered that the oil tanks on the cars to the west side of said cut off were becoming so hot from the heat of the fire they began to smoke. To save the company's property, as well as to prevent a not improbable explosion, augmenting the impending danger to property and the lives of people within its range, the superintendent gave direction to the crew to move said train to the east out of danger. To effect this the engine was carried to the west end of the train, facing east, to push it eastward.

Springer did not live in said addition, and had no property interests there to look after. The plaintiff's witness Frazier was indulged to testify that Mr. Peck, division superintendent of the defendant, told him:

"That he had had the shops closed down and ordered the men to come down and help save the stuff. He told me to keep them as long as they could do any good. The shopmen were at the fire. They carried my goods out of the

Digitized by Google

house; but the goods were burned up in the street. Most of the goods were carried over, then, in the railroad yards."

To say nothing of this being mere hearsay testimony, there is nothing in the record to show that Springer was in the employ of the defendant. The only testimony touching this matter is that of the widow of the deceased, who said:

"He [Springer] was employed by the Cotton Belt Railway Company as a scratch boss in the mill; that is, he marked the timber to be dressed."

His immediate foreman, Wheelan, testified:

"I was foreman in the mill department of the shops, and Springer worked under me. The men were not ordered to quit work and go to the fire. They kept dropping out and going. Springer was familiar with the yards. I do not know that Springer had gone to the fire. I went to the fire after all the men had gone. I did not tell them not to go."

After he reached the vicinity of the fire, witness Peebles testified that he (Peebles) had been carrying goods out of a house, and, when he went out to the railroad tracks and discovered that some goods were taking fire, he saw Springer and said to him, "Let's try to save some of the stuff;" that they carried a dresser through said opening, then returned and picked up a mattress, and while Springer was attempting to pass through the opening with it he was caught and crushed between the cars.

The negligent liability of the defendant railroad for this accident is charged in two counts of the petition. The substance of the first count is that, while the people and Springer were fleeing with portions of their goods across said tracks, "the defendant, without exercising ordinary care and caution, and without keeping a constant lookout for persons upon its tracks, negligently, recklessly, and wantonly, by its agents and employés, with a locomotive steam engine pushed certain cars then and there standing on its said tracks, which said Springer and others were passing, causing them with great force to come together, catching said deceased," etc. The second count, after setting out the preliminary facts, charges that:

"The defendant, without exercising ordinary care and caution, and without keeping a constant lookout for persons upon its tracks, negligently, recklessly, and wantonly, by its agents and employés, with a locomotive steam engine, negligently, wantonly, and violently pushed certain cars then and there standing on its tracks, and which cars were at the time about four or five feet apart, and between which said John I. Springer and others wree passing, causing them with great force to come together, catching said deceased."

The answer, after setting out the facts occasioning the movement of said cars, alleged contributory negligence of the deceased. At the conclusion of the evidence the court directed a verdict for the defendant.

Much reliance is placed by plaintiff's counsel upon the following statute of Arkansas (Kirby's Dig. § 6607):

"It is the duty of all persons running trains in this state upon any railroad to keep a constant lookout for persons and property upon the tracks of any and all railroads, and if any persons or property shall be killed or injured by the neglect of any employés of any railroad to keep such lookout, the company owning and operating any such railroad shall be liable and re-

Digitized by Google

sponsible to the person injured for all damages resulting from the neglect to keep such lookout, and the burden of proof shall devolve upon such railroad to establish the fact that this duty has been performed."

It is held by the Supreme Court of that state that this statute applies as well to the running of trains in railroad yards as elsewhere. Railway v. McQueeney, 78 Ark. 28, 92 S. W. 1120; Railway v. Graham, 102 S. W. 700. On its face this statute only creates the liability of a railroad when the injury or death results from neglect, which consists in failing to keep a constant lookout for persons upon its track. Like any other act of negligence, which is always a relative term, the degree of vigilance is measured by the surrounding circumstances.

The chief insistence of plaintiff's counsel is that under the special circumstances, when the employés in charge of the movement of the engine and cars knew that a multitude of people were thronging about the track on which the movement was proposed to be made, it was a wanton act to undertake it without taking such affirmative measures of precaution as would certainly have assured them that no person would be on the track. This extreme proposition cannot rest alone upon the terms of said statute. The only requirement it imposes is that the persons running the train should "keep a constant lookout for persons upon the track." Applied in a practical way, the lawmakers evidently had in mind the probability that persons, whether rightfully or wrongfully, might get upon railroad tracks, and therefore, out of consideration for their lives and limbs, they required those running trains to keep a constant lookout for such possibilities, and thereby avoid, as near as might be, injuring them. When, however, the conductor, engineer, and fireman, while the train is running, keep such lookout, they discharge the duty imposed by this statute, and no liability would attach to the railroad for striking and injuring the person upon its track in so far as the statute itself is concerned. This, it seems to us, must be conceded.

In this respect the testimony of the engineer and the fireman in charge of the engine was that from their respective sides of the cab each kept a sharp lookout ahead, and they had no knowledge that the plaintiff had gone between the cars, although they knew that many people were about the train and had been passing through the same. It therefore devolved upon the plaintiff to show something more to inculpate the defendant company. On the cross-examination of the engineer (Dillon) he was indulged to state what he said to the switchman who gave him the order to move the train, which was to the effect that it was dangerous, as they were liable to kill somebody, and that he was loath to make the movement. It was inadmissible to bind the defendant by this free expression of opinion by the engineer. Being admitted, it evidenced only the sense of the danger of moving the cars at the time and place, and the necessity in executing the order of exercising due care.

The law has equal regard for the rights of the railroad company, and its conduct in the matter of precaution must be compared with that of Springer's. The right of self-preservation and protection in the eye of the law is accorded to the corporate entity, which but

Digitized by Google

represents the aggregate stockholders, as well as to the individual. The cars stood upon a track dedicated to the exclusive use of the railroad company. There was no public highway over this ground, and the public had no right to appropriate it to a private use. When the property of the railroad company became exposed to imminent danger of destruction, from the proximity of the fire, it had the unquestioned right to the immediate use of its track, in its private yards, for the extrication of its cars. The emergency admitted of no delay. When the yard master or overseer discovered that the oil tanks were beginning to smoke from the heat of the fire, a delay of a few minutes might have been attended with disastrous results, not only to the cars of the railroad, but to the lives of hundreds of people and their goods thronging and scattered close to the cars. The lack of energetic and prompt action on the part of the employés to rescue the cars might have rendered the company liable for other and greater damages.

Under such conditions, what duty did the law impose upon the railroad toward the man Springer, before it could move its own property on and over its own right of way? He was not on the defendant's track and right of way by authority, or even as a licensee from the defendant. The employés had not seen him, and did not know that he was there, or that he contemplated passing between the cars. As a general precaution, taken by the railroad, the evidence shows the fallowing facts: Woody, a switchman, who worked in the field, testified:

"Before the engine came to the cars, I was getting people out of the way from the engine and cars. I saw a lot of people jumping through the cars over the drawbars, and I wanted to keep any more from going through. The engine coupled on and no more people were jumping through the cars. I hollered to the people to stand back, so that I could see down the line we were shoving, and a lot of people got back. I gave the signal to the engineer to come ahead. I saw there was an opening down there about five feet in the cars, and I went down that way to catch the coupling; but before I got there the cars came together, and somebody said a man was killed, and I gave the signal to stop. * * * Another switchman, Robert Searles, was between me and the engine. We hollered to the people at the time to get out of the way, and they all stood back. I did not see a man between the cars. We were acting under the foreman's orders to move the cars to keep them from burning."

He further states that they did not see anybody carrying goods through the opening, but the people he was hallooing at were going over the drawheads; but he saw others stopping people from going through the opening. Both citizens and employés were assisting him in keeping the people back. "I hollered to the people in a high pitch."

McKay, another switchman, testified that:

"Just prior to the accident I walked to the car where he [Springer] went through and opened the knuckle and then walked about two car lengths to the east. I saw the engine coming, and wanted to get on the other side. So I went through on the north side, and there was quite a number of fellows running back and forth through there. I said: 'You had better look out; there is an engine coming against that car.' As I said this I met another bunch and said the same thing, and I walked east about two car lengths on the north side of the car."

Digitized by Google

"We coupled to the west string and I was told to wait until the other switchman walked up to the opening. I was midway to the first car and the engine. Woody was the other switchman. We waited for him to go to the opening. He gave me the signal to move ahead, and I gave it to the engineer."

There was no contradiction of this evidence. In addition to this, the bell on the engine, as it was moving on to the west end of the train, was ringing and continued to ring as the movement of the cars began. Several witnesses, outside of the employés, heard the bell and took notice. But, says counsel for the plaintiff, the switchman should have stood at the small opening and continued to cry out for the benefit of Springer, as if he was then blind and deaf, and the railroad company owed him some especial duty. As people had been climbing through the cars throughout the length of the train, the switchmen had also to see to that incident. As the people in the vicinity took heed of his warning and gave way, he had the right to assume that their attention would be given to the movement of the cars, while he went along the line to keep other people from attempting to pass through over the drawheads.

If, however, it should be conceded that under such state of facts a jury might be permitted to say that the company fell short of the full measure of its duty toward Springer, what can be said in extenuation of his conduct? Did he even approximate the performance of the duty the law laid upon him? If he had home, or family, or property involved in that conflagration, from a sentimental viewpoint his conduct might invite some considerate indulgence. The law is not builded on sentiment or emotion. It deals with the practical relations of men as members of the social compact—with checks and mutual obligations, which experience has crystallized into generally recognized custom, or has taken the form of positive statute. Springer had no business to take him upon the defendant's right of way. He had gone to the vicinity of the fire from impulse, if not curiosity. It is a reasonable inference that, as the mattress which Peebles and Springer were carrying was between them, Springer went in between the cars without stopping or looking or paying any heed to anything else than the mattress, as it fell to the north side of the cars.

What were the open, visible facts about that yard just preceding this accident? Within the preceding 45 minutes of the raging of the fire the railroad men had been running an engine up and down until they had cleared five of the tracks. The plaintiff's witness Schnable, testified that:

"The company was switching with a couple of engines up and down those tracks, and paid no attention to the people trying to save their goods. * * * Cars and switch engines were moving on the tracks. In their excitement, people did not realize their danger. * * * Switching was done on the track south of the main line."

If this is so, the "switching with a couple of engines up and down these tracks" was additional warning to Springer that it indicated a movement of the train, which was exposed after the train north of it had been pulled away, at any moment. The presumption was that

Digitized by Google

there could be no other purpose in running an engine over the cleared tracks than to pull out this train. Several witnesses testified to seeing the engine, and hearing its bell, that hitched to the train on track 6, and heeded the warning. The fact that no other person than Springer was injured but accentuates his heedlessness.

Within that time Springer had learned of the fire while in his shop to the east of the town. Judging from the diagram in the record, the distance of that shop from where the accident occurred was about four blocks. It is incredible that Springer should not have observed the preceding movement of the engine and the cars. More than that, just before the engine moved to push the train of cars in question, the brakeman passed through this opening to adjust the knuckle, which was an act to indicate preparation for movement. The switchman gave the warning, which the people in the vicinity heard and stepped backward. If Springer did not see or hear these things, the further evidence is that the engine was moving at the west end of the train, with the bell ringing, which continued during the movement of the cars. Other people heard this signal and saw the engine in motion, which was in full view and only a short distance away. More significant still of his recklessness, the witness Barbler testified:

"I knew Mr. Springer, and saw him just before he was killed. He was carrying furniture away from the fire. We were right near the opening between the cars on track 5. We had hold of a mattress and carried it up to the opening, and told him it was dangerous to go through, and he dropped it and went on and got something else. I went away and didn't see him any more. This was eight or ten minutes before the accident."

We discover no evidence of internal improbability of the truth of this statement, nor any external facts which a disingenuous and disinterested mind should regard as casting any reasonable doubt on its veracity. The imputed conflict between his statement and that of Peebles is rather seeming than real. The expression, "We had hold of a mattress, and carried it up there to an opening, and told him it was dangerous to go through, and he dropped it and went on and got something else," does not conflict with Peebles' statement, as Springer, before Peebles spoke to him, may have been engaged in like work.

Realizing the force of all this evidence, counsel for the plaintiff suggests that, in the absence of direct proof to the contrary, the presumption should be indulged that Springer heeded the warning and did listen and look before attempting to pass through the cars. There are two complete answers to this:

(1) The witness Bobbitt testified, without contradiction:

"I had been leaning against one of the cars just before the accident. I saw the engine coming and moved away. I saw Springer go between the cars, carrying some household goods. He was going straight ahead looking south without looking east or west. If he had looked, he could have seen the engine coming. There was nothing to obstruct his view."

He did not see Springer hurt, or notice some women near the opening. We do not perceive any ground for discrediting his statement, simply because he did not see and identify a lot of other people who chanced to be in that throng.

Digitized by Google

(2) The law declares that, under the surrounding conditions, Springer did not look and listen, or that he did not heed the warnings, as he could not have listened without hearing the bell, and he could not have looked without seeing the engine moving, as it was in full view, only a short distance away. Northern Pac. R. Co. v. Freeman, 174 U. S. 380, 384, loc. cit., 19 Sup. Ct. 763, 43 L. Ed. 1014; Hayden v. M., K. & T. Ry Co., 124 Mo. 573, loc. cit., 28 S. W. 74; Railway Co. v. Andrews, 130 Fed. 67–71, 64 C. C. A. 399; Rollins v. Railway Co., 139 Fed. 639, 71 C. C. A. 615; Railroad Co. v. Chapman, 140 Fed. 129, 71 C. C. A. 523; Rich v. Railway Co., 149 Fed. 79, 78 C. C. A. 663.

In Pittsburg, etc., R. Co. v. West, 34 Ind. App. 95, 69 N. E. 1017, the court said:

"The presumption arises that a traveler approaching and about to cross the railroad track saw whatever was in the range of his vision had he looked, or heard whatever he might have heard had he listened."

There is nothing in the Arkansas statute, hereinbefore quoted, which in any degree exempted Springer from the consequences of his own heedlessness, without which the accident would not have happened. The Supreme Court of Arkansas has repeatedly and persistently said that the rule of application to any person when entering upon the tracks of the railroad company to keep a lookout for his own safety is too deeply rooted to tolerate debate. "The true rule, which no amount of amplification can simplify, is that, whenever the negligence of the plaintiff contributes proximately to cause the injury of which he complains, the defendant is not liable." Johnson v. Stewart, 62 Ark. 164–170, 34 S. W. 889; Railway Company v. Leathers, 62 Ark. 235, 35 S. W. 216; Railway Company v. Dingman, 62 Ark. 245, 35 S. W. 219; Burns v. Railway Co., 76 Ark. 10, 88 S. W. 824; Barry v. Railway Company, 77 Ark. 401, 91 S. W. 748. See, also, Adams v. Railway Co., 83 Ark. 300, 103 S. W. 725. This principle has been so repeatedly applied to cases in pari materia in this jurisdiction that to reverse this case would tend to unsettle the rule. Mo. Pac. Ry. Co. v. Moseley, 57 Fed. 921, 6 C. C. A. 641; Crookston Lumber Co. v. Boutin, 149 Fed. 680, 79 C. C. A. 368; Davis v. C., R. I. & P. Ry. Co., 159 Fed. 10,[1] decided at the September term, 1907. This rule is aptly stated in Carlson v. Railway, 96 Minn. 504, 105 N. W. 555, 4 L. R. A. (N. S.) 349, 113 Am. St. Rep. 655, as follows:

"The duty of exercising caution in attempting to cross a railway track, a place of known danger, is not relaxed by the opportunity or occasion for theorizing or difference of opinion as to whether a train is or is not likely to pass. Observation, not logic, is the proper precaution." Guhl v. Whitcomb, 109 Wis. 69–85, 85 N. W. 142, 83 Am. St. Rep. 889.

Some reliance is placed by counsel for plaintiff upon the case of Railway v. Cain (Ark.) 104 S. W. 533. Persons were passing in front of cars standing on the side tracks, when other cars were "shunted" against the standing cars, which sent them forward so as to injure the plaintiff. Because of the fact that there was evidence to show that the brakeman at or near the end of the moving cars saw the

[1] 88 C. C. A. 488.

Digitized by Google

plaintiff and his companions as they were about to cross the track behind the standing cars, and observed their movements, it was held that the case should go to the jury. Especially so, when the testimony tended to show that the brakeman, after he had observed the parties going upon the track, by calling their attention to the moving cars, could have warned the plaintiff of the danger. The court said:

"The most serious question is whether the jury were warranted in finding that the brakeman knew or had reason to know that the plaintiff did not see the moving cars, and was, therefore, oblivious of his peril; for, unless the brakeman discovered the fact that the plaintiff was oblivious of the danger, he had the right to act upon the assumption that the latter would not expose himself to it by going upon the track. It is not a question whether the brakemen could have discovered the plaintiff's peril in time to have avoided it, but whether he did discover it."

The case is rather authority for the proposition that, if the party was injured where he had no right to be, there was no responsibility for the accident on the part of the railroad company, unless it discovered his peril in time to have avoided the injury. Under the facts and circumstances of the case at bar, we have no need to controvert the ruling of courts respecting the responsibility of railroad companies for injuring persons under conditions where the conduct of the employés amounts to an implied invitation to persons to undertake to pass over crossings where the cars stand separated, without exercising a proper degree of care when suddenly closing up the space. It will be found, on careful analysis of the cases, that the responsibility of the railroad company is conditioned, "unless he [the injured person] contributed to it by his own negligence," or some equivalent expression.

The narrowness of the space, four or five feet, between the cars, where the injury in question occurred, indicates that it was not intended as a passway for carrying through it furniture and household goods; otherwise, it would have been left wider. Clearly, it was made before the fire originated, as the engine did not come to track 6 until after the cars were removed from the first five tracks. As it was not a public crossing, where the public had a right to cross, and, therefore, might reasonably assume that the railroad left the opening for public accommodation, and inasmuch as the small opening was there prior to the fire, it cannot even plausibly be asserted that the railroad company should be held to have apparently invited the public to use it. Springer had no right to be where he was injured. He was uninvited by the railroad to be there. Under extreme exigency the railroad was using its own track in its private yards to save its own property from imminent peril. Under such conditions it owed such an intruder as Springer no other obligation than not to wantonly run him down. The effort made by the employés to see that the track was cleared, together with the open movement of the engine and the ringing of the bell, contradict any imputation of recklessness or wantonness on the part of the defendant.

The trial judge saw and heard all the witnesses. He was familiar with the physical facts of the place. His judgment on the undisputed facts, in our opinion, should be affirmed. It is so ordered.

Digitized by Google

ADAMS, Circuit Judge (dissenting). I am unable to agree with the majority in this case. I think the evidence clearly warranted submission to the jury of the issues here involved. The evidence, including the failure to observe the requirements of the laws of Arkansas, strongly tends to show negligence on the part of the company in moving its train of cars which killed decedent. At that time the citizens of Pine Bluff, including men, women, and children, were desperately struggling to save their household goods from conflagration by carrying them southward across the railroad tracks to a place of safety. No other direction was available to them. A train of freight cars which obstructed their flight had been opened, making a passageway of four or five feet in width, through which they had for 45 minutes been permitted to pass and repass. From 1,000 to 1,500 excited persons were making or liable at any time to make use of the passageway. The situation was such that the engineer in charge of the switch engine, when ordered to couple on and move the train eastward, thereby closing up the gap or passageway, at first refused to do it. He testified thus:

"When the switchman ordered me to go on that track, I told him that it wouldn't do; that we would kill somebody if we did, or were liable to do so. I didn't want to move that car; but he ordered me to, and it was my duty to obey. * * * I knew that the whole space in there was filled with people and that they were passing to and fro. I knew that they were carrying things there and putting them down; but he signaled me on, and I had to go."

While decedent had no property exposed to the peril of the fire which required moving, he was engaged in assisting others who had. He was not a trespasser. Not only does the evidence tend to show, but I think it conclusively shows, that he was rendering assistance by direction of defendant's agents. He was employed in the defendant's shops nearby, and with many other workmen was out doing what he could to aid the distressed citizens of the place. James Frazier, the chief of the fire department, testified that Mr. E. A. Peck, the division superintendent of defendant, was there, and that he told him that "he had had the shops closed down, and ordered the men to come down and help save the stuff." He also testified that the superintendent told him "to keep them as long as they could do any good." Mr. Peck fails to deny this testimony. While Mr. Wheelan, the foreman of the shops testified in his direct examination as stated in the opinion of the majority, he testified on cross-examination as follows:

"I went to the fire after all the men had gone. They did not come back that evening. The majority of them lived in the burnt district, and I suppose they went to help. We did not dock any of them for the time lost."

Not only was decedent aiding the stricken people by consent of his employer, but there is ample evidence tending to show that he and all others were by like consent of the company passing over the railroad tracks and between the cars in question in the performance of their work. They had, with the full knowledge and consent of the company, been doing it for 45 minutes before Springer was killed, and not only had no objection been made by any of the officers or agents of the company, but they had facilitated the use of the

Digitized by Google

tracks and passageway by the people. The defendant generously and commendably acceded to the exigent demand of the occasion. It allowed or licensed the use of its track and passageway between the cars by the people. It does not take the time required to bar rights by the statute of limitations to establish a license. It may be established in a short time for a particular and temporary purpose, and in my opinion it was so done in this case. Springer was obeying the command of the defendant in doing what he did at the time he was killed, and he and others engaged with him were crossing over the tracks and making use of the passageway in question by the license and invitation of the defendant. While Springer and the others were responding to that invitation, the law required the exercise on defendant's part of ordinary care and prudence for their safety. Bennett v. Railroad Co., 102 U. S. 577, 26 L. Ed. 235; Foster v. Portland Gold Min. Co., 52 C. C. A. 393, 114 Fed. 613; Carleton v. Franconia Iron & Steel Co., 99 Mass. 216.

Importance seems to be given by the majority to the fact that there were some oil tanks on cars in the yard which were liable to be ignited, and therefore required hasty removal. There is evidence that the oil tanks were in no danger, and also evidence that they were in danger of ignition; but, assuming the fact to be that they were in danger, that fact affords no reason for departure from the general rule governing the conduct of the defendant towards others situated like Springer. It could not disregard its duty to them to save its own property. Both required consideration and attention. The exposure of the oil tanks and all the other facts as they existed were entitled to consideration in determining whether under all the circumstances the defendant exercised ordinary care. The more complicated and complex the facts, the more reason is there for submitting them to the consideration of a jury, whose appropriate function is to weigh and determine them. While I think it conclusively appears that Springer was killed by the negligent act of the defendant company—that is, by failure to exercise ordinary care for his safety—I cannot be mistaken in saying that there was substantial evidence tending to show that its negligence caused his death. This is all that is necessary to require a submission of the issue of negligence to the jury.

This brings me now to a consideration of the issue of contributory negligence upon which the majority rely for affirmance. Before considering this it is well to take our bearings in the law. Contributory negligence is a defense which the defendant is required to plead and prove. It is properly defined to be a failure to exercise ordinary care for one's own safety, and by "ordinary care" is meant that kind of care which ordinarily prudent persons usually exercise in similar circumstances. The defendant, therefore, had the burden in this case of showing that at the time Springer was killed he failed to exercise that care for his own safety which ordinarily prudent persons generally do in circumstances like those in which he was placed at the time. The rule is well established, too, that the defense of contributory negligence must be made out by proof that would satisfy all reasonable men in the exercise of a fair and honest judgment, before the

Digitized by Google

court can take the issue from the jury and say as a matter of law that the defense has been sustained and direct a verdict for the defendant accordingly. Now, how about the facts in this case? Do they show so conclusively that all reasonable men in the exercise of fair and honest judgment would say so that Springer was not at the time he was injured exercising the care and prudence for his own safety which ordinarily prudent persons usually do in like circumstances? That is the question. If it is answered in the affirmative, the case should have been taken from the jury, as it was. If it is answered in the negative, the issue should have been submitted to the jury for its exclusive determination.

What are the facts? Everybody was excited. From 1,000 to 1,500 anxious people were straining every nerve to save their own and their neighbors' property from the conflagration raging close by. As one witness put it:

"Everybody was excited, and the people running around the tracks did not know how much danger they encountered. There was no other way of escape. * * * If they went north, there was the river. If they went west, they had to go through the fire. South and east were the yards and shops."

Another witness said:

"There must have been 1,000 or 1,200 people crossing and recrossing those tracks. They were scattered everywhere—all over the yard and tracks where they were carrying goods. Others were passing and repassing through the opening, carrying goods through. There were men, women, and children."

Another said:

"The tracks were covered with people running to and fro, trying to save their things. The only way to save them was across the railroad tracks."

In this condition of intense excitement, confusion, and distraction, Springer had already carried one load of goods through the passageway, deposited it in a place of safety, returned for a second load, and was carrying that along the way and between the cars, which he had already once found perfectly safe. When he approached the opening there was no person there to warn him that the gap was to be closed. He possibly might have said to himself that the defendant would perform its statutory duty and provide a lookout if it was about to move its train, especially in circumstances of such peril to many as then surrounded the situation. It may be conceded that witness McKay, a part only of whose testimony is found in the majority opinion, had been there a short time before. He said:

"There was quite a number of fellows running back and forth through there."

He also said:

"You had better look out. There is an engine coming against that car."

But this is not all his evidence. He further said:

"I spoke to them in a pretty good voice, just a little louder than I am now using on the witness stand. I walked right through there, and kept walking. I did not stop long enough to see whether those who were coming and going with furniture heard me or not."

Digitized by Google

He not only testified that he walked east about two car lengths on the north side of the car, but he added:

"Then everybody said there was a man killed."

This testimony, in my opinion, falls far short of showing conclusively, or even persuasively, that McKay gave Springer notice of the intended movement of the train of cars. All it necessarily means is that he (McKay) passed along in the midst of the prevailing noise and confusion, and in a tone of voice not much louder than a witness employs in a quiet courtroom made his announcement. But where was Springer then? McKay walked the distance of two car lengths before the commotion naturally incident to so grave a matter as taking the life of a human being broke out. We may reasonably infer from this that, as Springer with his heavy load of household goods upon him would not be likely to walk faster than McKay who was without any burden, the former was at least two car lengths away from the opening when McKay in a moderate tone of voice made his announcement. We may also reasonably enough assume that, in the midst of the crowd of people and the inevitable noise and confusion, Springer could not have seen McKay or heard his announcement, even if he had been nearer than two car lengths from the opening. I do not think any one can fairly read the testimony of McKay without concluding that it is a matter of conjecture, pure and simple, whether, under the circumstances surrounding him at the time, Springer did in fact see or hear McKay, or whether he in the exercise of ordinary care could have seen or heard him.

But it is said that Woody, the field switchman, gave some notice which Springer negligently failed to heed. He was the one who gave the signal to the engineer to come ahead. Some of his evidence is quoted in the opinion, but not all. He testified on cross-examination that he "did not see anybody carrying goods through the opening, that he did not warn anybody at that particular opening, that he could not see people going through the gap because people were between him and the gap, and that he had to look over their heads to see that there was a gap." He also testified on cross-examination that the persons he "was hollowing at were going over the drawheads" at other places than between the cars at the opening. The facts to which I have just called attention, as well as the many reasonable inferences to be drawn from the attending facts and circumstances, take away from the evidence of witness Woody that conclusiveness requisite to declare its legal effect. He, like McKay, utterly fails to make certain, or even probable, the fact that Springer either heard, or in the exercise of ordinary care ought to have heard, any warnings given for the movement of the train.

There was evidence tending to show that a bell was ringing on the switch engine as it approached the west side of the train of cars, but that evidence was discredited by the proof that there were two switch engines carrying bells, and that the sound might have emanated from the other engine. It is also not unfair to assume that the noise and confusion would prevent Springer from hearing the bell or appreciating its meaning, inasmuch as the engine moving the train, even

Digitized by Google

Witness Bobbitt is also relied upon as giving testimony which justified the peremptory instruction in favor of the defendant. He testified that:

"He saw Springer go between the cars carrying some household goods. He was going straight ahead, looking south, without looking east or west. If he had looked, he could have seen the engine coming."

When his testimony is critically examined, as it ought to be in a case of this kind, all he really states is that just as Springer was entering the gap he was looking south, and did not look east or west. Non constat he might a moment before only have given the requisite attention. Union Pacific R. Co. v. Rosewater, 84 C. C. A. 616, 157 Fed. 168. Moreover, this witness is discredited by his failure to observe other things which undoubtedly occurred.

Other evidence found in the record is relied upon, and particularly that of two women, who stated that they saw the engine approach the west end of the train, and in their opinion Springer might have seen it if he had looked.

The foregoing is substantially all the evidence upon which we are asked to justify a peremptory instruction given to the jury below on the ground of Springer's contributory negligence. If, in fact, it is not all of the evidence on that subject, it fairly represents in its uncertainty and inaccuracy the body of the evidence relied upon for that purpose. I am unable to find in it that certainty requisite for a direction as a matter of law that Springer failed to exercise ordinary care for his own safety. In actions of exigency, of high state of excitement, of confusion and noise, people do not ordinarily act with the same coolness, deliberation, and foresight as they exhibit on occasions when conditions favor calm and deliberate mental processes. This most natural human infirmity ought to be, and has been, recognized judicially in the determination of questions of ordinary care. Mr. Justice Holmes, when one of the judges of the Supreme Judicial Court of Massachusetts, in the case of Pomeroy v. Westfield, 154 Mass. 462, 465, 28 N. E. 899, on this subject said as follows:

"But, further, in determining the right of a plaintiff to recover, there are two elements to be considered: First, how far he is chargeable with knowledge of the danger which he incurred; and then, under what exigency he acted. That is to say, the exigency legitimately may affect, not only the question how far he appreciated or ought to have appreciated the danger but also how far he could run a risk known to be greater than prudently could be incurred under ordinary circumstances without losing his right to recover in case he was hurt."

Judge Macfarlane, speaking for the Supreme Court of Missouri in Dickson v. Omaha & St. L. Ry. Co., 124 Mo. 140, 27 S. W. 476, 25 L. R. A. 320, 46 Am. St. Rep. 429, lays down the rule that in circumstances of emergency a person is not chargeable with negligence if he fails to appreciate the safest and best course to pursue Judge Barclay, speaking for the Supreme Court in Schroeder v. C. & A. Ry. Co., 108 Mo. 322, 18 S. W. 1094, 18 L. R. A. 827, says that ordinary care to avoid an injury by a person must "be judged from

Digitized by Google

the standpoint furnished by the facts of the particular case, and also by considering the exigency under which he acted."

The foregoing cases do not state any new rule, but rather afford a clear statement of a necessary corollary of the old one; which we daily apply in defining ordinary care to be that care which ordinarily prudent persons exercise under similar circumstances. As ordinary care in a given case is measured by what ordinarily prudent persons do under similar circumstances, it follows necessarily that the circumstances of a given case not only may, but must, be considered in determining the issue of ordinary care as involved in that case. In view of the peculiar facts of this case and the applicatory law, I believe a great injustice has been done to the plaintiff in error by the judgment of the majority. Adherence to the letter of the "look and listen" doctrine has superseded the proper regard for its spirit, and the function of a jury in a case peculiarly appropriate for its exercise has been usurped by the court.

(161 Fed. 815.)

CLAY et al. v. WATERS.

BOATRIGHT v. SAME.

(Circuit Court of Appeals, Eighth Circuit. April 1, 1908.)

Nos. 2,628, 2,629.

1. BANKRUPTCY—PROPERTY OF BANKRUPT—TITLE OF TRUSTEE.

The title to money or property belonging to a bankrupt before adjudication vests in the trustee, subsequently appointed, under the express provisions of Bankr. Act July 1, 1898, c. 541, § 70, 30 Stat. 565 (U. S. Comp. St. 1901, p. 3451); but the trustee acquires no title to money or property in the hands of third persons which did not belong to the bankrupt prior to the adjudication.

2. SAME—OWNERSHIP OF PROPERTY—EVIDENCE.

Evidence *held* to establish that $40,000 secreted in a bank by a bankrupt, within eight months after the adjudication in bankruptcy, belonged to him before the adjudication, and passed to his trustee in bankruptcy by virtue thereof; but otherwise as to money and jewelry found on his person at the time of his death, a year and a half after the adjudication, to which the trustee acquired no title.

3. TORTS—JOINT WRONGDOERS.

When several persons unite in an act which constitutes a wrong to another, intending at the time to commit the act under circumstances which fairly charge them with intending the consequences which follow, they are all jointly and severally liable for the wrong done, regardless of their individual participation in its accomplishment or their individual gain or profit resulting therefrom.

4. BANKRUPTCY—SECRETION OF FUNDS OF BANKRUPT—LIABILITY OF ATTORNEY.

Where, after the death of a bankrupt, who had concealed a large sum of money on deposit to the credit of fictitious persons in a Canadian bank, his confidential attorney went with the bankrupt's mother and widow and represented to the bank that they were the identical persons in whose names the money was deposited, and through his influence procured the payment of such deposit to them, after which such attorney's bank account assumed an importance and magnitude unknown before, which was not explained, and he thereupon immediately invested funds in real estate security and notes to the amount of $6,975, he was properly charged to that extent as a trustee thereof, and was properly required to transfer the same to the bankrupt's trustee.

Digitized by Google

western Division of the Western District of Missouri.

R. M. Sheppard and Thomas Dolan, for appellants.

J. W. Halliburton (Samuel McReynolds and H. W. Currey, on the brief), for appellee.

Before HOOK and ADAMS, Circuit Judges, and CARLAND, District Judge.

ADAMS, Circuit Judge. These are appeals from a decree holding Priscilla Boatright, mother of Robert Boatright, and George R. Clay, her attorney, liable for appropriating money and jewelry possessed by Boatright, the bankrupt, at the time of his death, and divesting Clay and his wife, Cora, of title to certain real estate and promissory notes in which some of the money was invested. On December 22, 1902, Robert Boatright was, on the petition of his creditors filed November 22, 1902, adjudicated a bankrupt. He failed to attend the first meeting of creditors before the referee, or to submit to an examination as required, and never filed schedules of assets or liabilities. He absented himself from the jurisdiction of the court, or concealed himself so that compulsory process was unavailing. In August, 1903, he went to Windsor, in the Dominion of Canada, and in the assumed name of "John Bagwell" deposited in the Canadian Bank of Commerce located in that city $40,000 in money to the credit of "John Bagwell," "Polly Bagwell," and "Priscilla Bagwell," and made the same subject to the sight draft of either of them. In May, 1904, Boatright died at Kansas City, Mo. Several thousand dollars in money and some jewelry were found on or about his person. Soon after his death Priscilla Boatright, his mother, and Polly Boatright, his widow, went to Windsor, Canada, accompanied by Clay, the attorney, and by his assistance and co-operation satisfied the officers of the Canadian bank that they were the identical Priscilla and Polly Bagwell in whose names the $40,000 had been deposited by John Bagwell in August, 1903, and each drew out one-half of the amount deposited, with accrued interest, amounting for each to the sum of $20,553.64, and appropriated the same to their own use. In like manner, also, they divided the money and jewelry found on or about Boatright's person at the time of his death in Kansas City. Priscilla Boatright secured between $3,000 and $4,000 of that money and some of the jewelry.

The present suit was a plenary action in equity, instituted by the trustee of the estate of Robert Boatright against Priscilla Boatright, George R. Clay, and Cora M. Clay, his wife, charging that the money and property secured by the co-operation of the first two of them, both at Windsor and Kansas City, belonged to Boatright, the bankrupt, before his adjudication in bankruptcy, and therefore now belonged to complainant trustee, and that some part of the money so secured by them had been invested in certain described real estate and promissory notes, and title thereto taken in the name of George R. Clay, or his wife, Cora, which, therefore, now belonged in equity to complainant. The defendants accepted the issues thus tendered,

Digitized by Google

a trial was had in the court below, the issues were found in favor of complainant, and $6,975 of the money secured by defendants were found to have been invested in real estate and notes in the name of George R. Clay or his wife. A final decree was entered divesting Clay's title to the land and notes, vesting the same in the trustee, awarding the latter a general judgment against Priscilla Boatright and Clay for $17,575, and directing the former to turn over to the trustee the jewelry which she obtained from Boatright at Kansas City. From this decree the defendants prosecuted separate appeals. As there is only one record, we find it convenient to dispose of both appeals in one opinion.

If the money and property taken by defendants did not belong to Boatright before he was adjudicated a bankrupt, the trustee of his estate acquired no title to them (Bankr. Act July 1, 1898, c. 541, § 70, 30 Stat. 565 [U. S. Comp. St. 1901, p. 3451]) and cannot recover in this action. If, on the other hand, the money and property did belong to him before the adjudication, title thereto vested in the trustee subsequently appointed, and he is entitled to relief. This issue is one of fact, pure and simple, and the conclusion of the trial court, unless plainly erroneous, should be followed. We do not find it necessary to resort to the analogies suggested by section 70d of the bankruptcy act relating to the effect of setting aside compositions or revoking discharges upon title to property acquired by the bankrupt after his adjudication. Neither do we find it necessary to apply rules governing the burden of proof in controverted issues invoked by counsel.

The facts disclosed by the proof, when given their natural probative force, satisfy us that the money deposited at Windsor belonged to the bankrupt before the date of the adjudication. The main facts may be briefly epitomized as follows: Boatright was a bad man, and much accustomed to crooked and fraudulent practices. He made his money by feigning to conduct real foot races and prize fights, and through that pretense swindling the innocent and guileless. The opinions in the cases of Stewart v. Wright, 77 C. C. A. 499, 147 Fed. 321, and Exchange Bank v. Moss, 79 C. C. A. 278, 149 Fed. 340, sufficiently portray his character, his occupation, and his business methods. So notorious was his infamy that the learned trial judge properly enough observed:

> "It is doubtful whether there has ever been a greater scoundrel than Robert Boatright."

He and his associates in crime had become possessed of about $300,000 in money during the 15 months immediately preceding the adjudication. No loss of this money is shown, and only a feeble and unsatisfactory effort to do it is made by the testimony of an accomplice. Boatright failed, and refused after the adjudication to make disclosure of his assets as required by law. He secreted himself, so as not to be compelled to do so. He took $40,000 out of the jurisdiction of the court and deposited it in fictitious, assumed names, subject, among others, to his own draft.

Digitized by Google

few associates, of whom he was the acknowledged chief, had an amount of money largely in excess of $40,000 shortly before the adjudication. We end with another indisputable fact that $40,000 in money was concealed by him outside the jurisdiction of the court within eight months thereafter. Meanwhile he persistently and successfully avoided the processes of law, which might have compelled him to disgorge. Why this dodging? Why this removal of money out of the jurisdiction of the court? Why this concealment of it? If he had acquired the money after the adjudication, none of these things would have been necessary. It could not have been taken from him by any processes of the bankruptcy court. Men are presumed to do all things with a purpose, and, when flight, concealment, and expense are resorted to, it is reasonable to presume that such resort was had for a purpose. The natural and reasonable presumption in this case is that they were had for the purpose of concealing the money in question from the reach of the bankruptcy court. Money was found in his possession just before bankruptcy proceedings were commenced, and his subsequent suspicious conduct and the failure to account for its loss justify us in the conclusion at which we have unanimously arrived that he never did lose it, but, on the contrary, concealed it to escape the demands of his creditors.

Attempt was made to show that Boatright left his accustomed place of operation in Webb City, Mo., conducted elsewhere some of his swindling foot races, prize-fighting contests, and the like during the early part of the year 1903, and thereby accumulated an amount of money in excess of $40,000; and we are asked to indulge the presumption that the money secreted in Canada was acquired by him in the ways just mentioned after the adjudication of bankruptcy and during the first part of the year 1903. Neither the character of the witness relied upon to make this showing, nor his story, inspires our confidence. His story is vague, uncertain, and improbable, and his character leads us to discredit it. We conclude that the $40,000 secreted in Windsor belonged to Boatright before the adjudication in bankruptcy, and consequently passed to his trustee by virtue thereof.

We are not satisfied that the money and jewelry found on his person at the time of his death in Kansas City, in May, 1904, had been owned by him prior to December, 1902. There is no such evidence of concealment or suspicious circumstances as characterized his action concerning the deposit of money in Windsor. Moreover, a year and a half had elapsed after his adjudication in bankruptcy and before his death. These and other considerations, unnecessary to mention, have brought us to the conclusion that the trustee has failed to make good his claim to the money and jewelry taken by Priscilla Boatright in Kansas City.

The questions remaining for consideration concern the liability of the defendant Clay in this action. The proof disclosed that he had for some time before and after the adjudication of bankruptcy been Boatright's confidential attorney; that he was familiar with his career; that he knew the facts attending the deposit in the Canadian

Digitized by Google

bank at Windsor; that he accompanied Priscilla and Polly Boatright to Windsor after the death of Boatright to secure the money; that he knew their real names to be Boatright, and not "Bagwell"; that he represented them to the bank as the veritable Priscilla and Polly Bagwell to whose credit the money had been deposited by Boatright; that he knew, when he accompanied the women to Windsor, of the pending proceedings in bankruptcy against Boatright and of the adjudication against him. Such is the general outline of Clay's actual knowledge. It would serve no useful purpose to detail the evidence from which we reach our conclusion; but from the foregoing general facts and the reasonable inferences deducible from them we are satisfied that it was through Clay's interposition, co-operation, and influence that the money was secured from the Canadian bank, and that he knew or had reasonable ground to believe, when he rendered his aid and exerted his influence, that he was aiding in the commission of a wrong. In these circumstances he was properly held liable with Priscilla Boatright for the money which he aided her to secure and wrongfully appropriate to her own use. The accepted rule on this subject is that "when several persons unite in an act which constitutes a wrong to another, intending at the time to commit it, or doing it under circumstances which fairly charge them with intending the consequences which follow," they are all jointly liable for the wrong done, without regard to their individual participation in its accomplishment or their individual gain or profit resulting therefrom. They are joint tort-feasors, and as such jointly and severally liable for the consequences of their wrongful act. 1 Cooley on Torts (3d Ed.) 223, and cases cited.

We have so far proceeded on the assumption that Clay did not share in the fruits of the wrongful act; but this assumption is unfounded in fact. It was through him and in his name that most of the money belonging to Priscilla Boatright was transferred from the Canadian bank to the bank of Neosho, Mo., in which Clay kept his personal account. His own account soon thereafter assumed an importance and magnitude unknown before, and this fact is not satisfactorily explained. Not only so, but he soon thereafter began making unprecedented investments in the purchase of real estate and in loaning money to his neighbors, taking from them interest-bearing promissory notes secured by mortgage on real estate. In view of the earnest contention of Clay's counsel that the money invested by him was his own, and formed no part of the money obtained from the Canadian bank, we have given the evidence on this subject most careful consideration, but find ourselves unable to agree with them. We think the facts, in the light of all the attending circumstances, are inconsistent with their contention, and that the money so invested by Clay was not his own. We agree with the conclusion of the learned trial judge that $6,975 of the Boatright money, which of right belonged to the trustee in bankruptcy, was invested by Clay in the real estate and notes described in the decree below, the title to which was taken in his own name, or that of his wife, the defendant Cora M. Clay. A resulting trust thereby arose in favor of the trustee in bankruptcy,

Digitized by Google

and the decree below, divesting title from the defendants Clay and vesting the same in the trustee, was accordingly correct.

But our disapproval of the action below in subjecting the money and jewelry taken from the person of Boatright at the time of his death to the demands of the trustee in bankruptcy requires a modification of the decree in the following particulars: The order requiring Priscilla Boatright to deposit the jewelry in the hands of the clerk of the Circuit Court for the use and benefit of the trustee should be eliminated from the decree, and the personal judgment against Priscilla Boatright and George R. Clay should be reduced from $17,575 to $13,578.63, and the latter sum should bear interest at the rate of 6 per cent. per annum from the date of the entry of the decree below. In all other respects the Circuit Court reached the correct conclusion.

The decree must therefore be reversed, and the cause remanded to the court below with directions to enter a decree in accordance with the views expressed in this opinion; and it is so ordered.

NOTE.—The following is the opinion of Smith McPherson, District Judge, on overruling the motion for a new trial:

SMITH McPHERSON, District Judge. This case is by a bill in equity, answer, and replication, with evidence taken. November 22, 1902, proceedings in involuntary bankruptcy were filed in this court by creditors against Robert Boatright, and December 22, 1902, he was adjudicated a bankrupt, and on due proceedings the plaintiff became trustee. The bankrupt did not attend the first creditors' meeting, filed no schedule, and did nothing else required by the bankrupt laws. Claims amounting in the aggregate to $300,000, were timely established against the estate, all based on the frauds and the rascality of the bankrupt in obtaining moneys from the several creditors. May 2, 1904, the bankrupt died. Neither the bankrupt himself, nor the heirs, nor the administrator since his death, has ever made application for a discharge.

It is doubtful whether, in the history of jurisprudence, there has ever been a greater scoundrel than Robert Boatright. I shall not attempt to enlarge upon this statement. The poverty of the English language does not enable me to do full justice to the subject, as will be seen by reference to the case of Wright v. Stewart (C. C.) 130 Fed. 905, and Stewart v. Wright, 147 Fed. 321, 77 C. C. A. 499. At his death on his person was found a large sum of money, namely, about $10,000. After the bankrupt proceedings were pending, the bankrupt deposited in a bank in Canada $40,000, representing himself to be John Bagwell; and he took the certificate of deposit in the name of John Bagwell, Priscilla Bagwell, his mother, and Polly Bagwell, his wife: the certificate being payable to either one or all three. After his death a part of this money was drawn out by these two women, with the assistance of the defendant George R. Clay, a practicing lawyer, then of Neosho, Mo. Part of this money was drawn through a local bank at Neosho, the defendant Clay identifying these women by the name of Bagwell, but whom he had known for quite a time by their correct names; and he likewise was with them at the Canada bank when the money was withdrawn, and he again represented that Bagwell was their true names. Defendant Clay knew Boatright's business, and knew that his means were obtained by illegal methods. The evidence fails to show just when and from whom the moneys above referred to were gotten, and the defendants urge that the title that he has to the property of the bankrupt's estate is of such property as Boatright had an interest in as of the date of adjudication, namely, December, 1902.

Ordinarily there is no question as to the correctness of the proposition that a trustee takes such property only as the bankrupt owned at the date of the adjudication, and that property afterwards acquired cannot go to the creditors in the bankruptcy proceedings. In this case the bankrupt could not get

Digitized by Google

a discharge, if living, because of his utter failure to schedule his property or to attend the first creditors' meeting, or do anything else that is required of him by the bankrupt law; and the discharge could not be granted him, because not applied for in time. And if he had applied for a discharge, and it had been granted, it would not be a defense as against any one of the creditors herein to the amount of a dollar, because all the debts were created by and through fraudulent and illegal transactions. Section 70d of the bankruptcy statute (Act July 1, 1898, c. 541, 30 Stat. 565 [U. S. Comp. St. 1901, p. 3451]) provides that, if the discharge is revoked, the trustee takes title to all the property of the bankrupt as of the date of the decree revoking the discharge. Section 64c of the bankruptcy statute is to the effect that, if the discharge is revoked, the property acquired thereafter shall be applied to the payment of the debts owing at the time of adjudication; and section 29b provides for imprisonment of a bankrupt who knowingly and fraudulently conceals assets.

Counsel have cited no case as bearing upon this situation, and, as far as I can gather, no court has passed thereon, or if there is such a decision, it has escaped my research. Clearly, under these statutes, if Boatright had been given a discharge, and later on this discharge had been revoked, the moneys found on his person and the moneys in the Canadian bank would be assets passing to the trustee for payment of the claims herein allowed. But there has been no discharge, for one reason at least, namely, that he never applied for one; and he never applied for one because of his willfulness and his utter contempt for this court, shown in many ways, and his utter defiance of the law with reference to bankruptcy proceedings. These persons became creditors because of the rascality and villainies of Boatright. He supplements his rascality and villainies in making these men creditors by additional rascality and villainies in refusing to obey any order of the court and the requirements of the statutes; and these things being so, I cannot see how it is possible for this man to occupy a better or different position then he would occupy if he had effected a composition with his creditors, or had obtained a discharge, and such composition or discharge had been set aside by decree of this court.

Counsel for defendant argue that it will not do to presume that Boatright has committed a crime in order to reach a conclusion in this case. Such an argument is in the face of the fact that there is not one transaction of Boatright in any manner connected with this case but what was a crime; and no violence is done by reaching any conclusion by presumption herein adverse to Boatright. In fact, nothing is to be, or can be, presumed in his favor. The whole story, from first to last, is a narration of scores of events, any one of which would have been the basis for the conviction of a felony before any court having jurisdiction thereof. Defendant Clay was this man's lawyer, and while his lawyer there is nothing to show but that he demeaned himself as a lawyer should. But the facts remain that he was familiar with Boatright's life. He was well acquainted with him. He knew his wife and mother. He knew them by the name of Boatright, and knew their name to be Boatright. He knew their name not to be Bagwell, and I am using mild language when I say that he had no right to introduce these parties to the bank at Neosho, and vouch for the fact that their name was that of Bagwell; and he had no right to go to Canada with them and there again introduce them to the Canadian bank by the name of Bagwell. Through these agencies moneys were withdrawn. These matters are not satisfactorily explained. These matters were within the knowledge of Boatright and the defendant Clay. The facts within their knowledge are not disclosed. These moneys, used by the defendant Clay and Mrs. Boatright, are not explained. They ought to have been explained.

In my judgment a prima facie case was made by the plaintiff, and such a case was made as called for a full disclosure by the defendants. The moneys thus used did not belong to the Boatright estate. These several pieces of real estate could have been purchased with no other moneys; and the trustee has the right to follow these moneys and subject the property to a sale and the proceeds applied in payment of the creditors.

There will be a decree for the plaintiff.

Digitized by Google

(Circuit Court of Appeals, Eighth Circuit. May 2, 1908.)

No. 2,707.

1. TROVER AND CONVERSION—EFFECT ON TITLE TO PROPERTY OF JUDGMENT AND SATISFACTION THEREOF.

The payment of a judgment in conversion vests the title to the property converted in the defendant as of the date of the conversion, as between the parties, but not as against a third claimant of the property, to whom the defendant voluntarily surrendered it after the conversion and before the judgment.

[Ed. Note.—For cases in point, see Cent. Dig. vol. 47, Trover and Conversion, § 314.]

2. MONEY RECEIVED—RIGHT OF ACTION—MONEY RECEIVED UNDER CLAIM OF RIGHT.

Plaintiffs wrongfully converted certain cattle, which they afterwards surrendered to a bank claiming a right to them, and which caused them to be sold. Defendant claiming a mortgage on the cattle, demanded them from plaintiffs, who stated that they had turned them over to the bank and disclaimed any interest therein. The bank then also disclaiming any interest, the proceeds of the cattle were paid over to defendant. Subsequently a third party recovered a judgment for the conversion against plaintiffs, which they paid. *Held* that, the money having been received under claim of right, there was no promise on the part of defendant implied from the transaction which would support an action against it by plaintiffs for money had and received to their use.

[Ed. Note.—For cases in point, see Cent. Dig. vol. 35, Money Received, § 28.]

In Error to the Circuit Court of the United States for the Eastern District of Missouri.

Thomas F. Galt, for plaintiff in error.

Alfred Gregory and R. F. Walker (Beardsley, Gregory & Kirshner, on the brief), for defendant in error.

Before SANBORN and ADAMS, Circuit Judges, and PHILIPS, District Judge.

PHILIPS, District Judge. The defendant in error (plaintiff below) recovered judgment in the sum of $2,086.77 against the plaintiff in error (defendant below) in an action of assumpsit for money had and received. To reverse this judgment, this writ of error is prosecuted. The controversy arose out of the following state of facts, briefly stated:

One Gillette, a large dealer in cattle in Kansas, who seems to have had a mania, as well as genius, for giving multiplied and conflicting chattel mortgages on the same herd or lot of cattle, by either mixing up the brands or giving the cattle an ostensible different situs, in 1898 acquired about 1,866 head of Texas cattle with the brand "J. A. L." There were various mortgages on these cattle. Notes issued by him, apparently secured by such mortgages, were negotiated by cattle commission merchants at Kansas City, Mo., to various purchasers, who seem to have taken them avidiously on account of the high rate of interest they bore and the assumed security on tangible cattle. In

Digitized by Google

November, 1898, after he had exhausted his resourcefulness in obtaining money and credit by such factitious methods, and his creditors began to press him, threatening him with prosecutions for obtaining money under false pretenses, Gillette fled the country, taking refuge in the Republic of Mexico. Among those claiming mortgage liens upon some of the Gillette cattle was the firm of Rice Bros. & Nixon, doing business at Kansas City, Mo., as commission cattle merchants. After Gillette left, Rice Bros. & Nixon sent one George Rice to the pastures out in Kansas to look after the cattle in which they claimed an interest. He found some of the cattle, with the brand on which they claimed a mortgage lien, in what is known as the "Plum Feed Lots" and some in what is known as the "Brogan Pasture." He discovered on inspection that these cattle were mixed with those of another brand. Brogan, in charge of the cattle in his lots, refused to let George Rice remove them. Thereupon Nixon, of said firm, went out and met Rice. After consultation, they invaded the Brogan pasture between midnight and 1 o'clock a. m., broke down the fence, and drove away all of the cattle in the lot several miles to Neosho, a station on the railroad leading to Kansas City. Nixon then went to the Plum lot, and, leaving enough cattle there to secure Plum as an agister of Gillette, drove the residue to Neosho, and shipped the whole of the two lots to Rice Bros. & Nixon at the stockyards in Kansas City. Included in these lots of cattle were 128 head bearing a different brand from that to which the plaintiffs laid any claim. Nixon knew, when thus tortiously removing the cattle, that there were among them those to which his firm asserted no claim. His only excuse for this lawless act was the trouble and difficulty of separating in the nighttime the different brands. When the cattle reached the yards at Kansas City, Nixon separated those on which the plaintiff claimed a lien and reshipped them to a pasture in the state of Iowa. Instead of making restitution, as far as they might, by returning the 128 head of cattle to the close where Nixon found them, Nixon, acting for his firm, left them in charge of one Munger, their bookkeeper, with instructions to turn them over to the person he (Munger) might think best entitled to them.

Other creditors of Gillette were on the qui vive, looking out for any Gillette cattle which might come to said stockyards, as there was considerable clamor among them as to their respective rights to the Gillette cattle. Among them was the National Bank of Commerce of Kansas City, which had a branch bank at said stockyards under the immediate management of one Voorhees. Learning about the situation of said 128 head of cattle, the president of said bank, with an inspector, looked over them and informed Munger that the bank held large amounts of Gillette paper and was anxious to get hold of as many of the Gillette cattle as possible. Rice Bros. & Nixon were evidently anxious to get out of the ugly and embarrassing situation into which Nixon's tortious conduct had brought them, by unloading the burden on any one willing to take it. Accordingly Munger turned the 128 head of cattle over to the National Bank of Commerce, with the understanding between them that the bank would hold them harmless from the consequences of their acts in the transaction. As this

Digitized by Google

arrangement was between Munger, representing the plaintiff, and the bank, it is important to follow the testimony of Munger, a witness on behalf of the plaintiff. After stating that Nixon separated the 128 head of cattle in question from the others shipped in by him and taking those claimed by the firm to a pasture in Iowa, he was asked, "In whose charge did Nixon leave the 128 head of cattle"? He answered: "In my charge." Then, stating that Nixon said to him "to turn them over to the parties to whom I thought had the best claim on them," he was pressed, on cross-examination, to state the exact language or terms employed between him and the representative of the bank in turning the cattle over to the latter. His answer was that Voorhees said "that the National Bank of Commerce owned a large amount of Gillette paper, and they were making an effort to secure all of the cattle in which Gillette was interested in any way, and asked me to turn these cattle over to the bank." After stating that Voorhees said the bank would have the cattle sold and the money held as a special deposit until the rightful ownership was decided, he was asked:

"If the National Bank of Commerce did not say that they would hold the firm of Rice Bros. & Nixon harmless against any loss that they might suffer on account of your turning these cattle over to them? A. Yes, sir. * * * He (Voorhees) asked me to turn the cattle over to the National Bank of Commerce. I asked him if the National Bank of Commerce would stand good to us for the cattle in case anybody else proved a better title or a better right to them. * * * A. I did. * * * And he said that they would. If we would turn these cattle over to him, or to the National Bank of Commerce. they would stand good to us and protect us from all liability. But I did not immediately turn them over to him. I called Mr. Winants (the vice president of the bank) over the telephone and told him what Mr. Voorhees had said and the proposition Mr. Voorhees had made to me, and I asked him to confirm it. and he did. He said the National Bank of Commerce would do that. Q. Why did you wish to turn these cattle over to anybody? A. Because they did not—because we had no claim on them. Q. Is it not a fact that you were anxious to get rid of the cattle, so as to avoid being held for them, and anxious to get somebody else to take them off your hands? A. We were anxious to get rid of the cattle. Q. Were you not anxious to turn these cattle over to somebody else, in order to get rid of the liability for them? Is that not a fact? A. To a certain extent. Q. Is it not a fact? A. Yes."

He then stated that he turned the cattle over to the National Bank of Commerce for Rice Bros. & Nixon.

"Q. I will ask you if you turned these cattle over to the National Bank of Commerce to hold for the account of Rice Bros. & Nixon? A. I did not. Q. I will then ask you again if you did not turn these cattle over to the National Bank of Commerce for them to hold as their own interest? A. I did not."

Then, being inquired of as to why he turned the cattle over to the National Bank of Commerce, he answered:

"Because I thought that in all probability they had a better claim to them than anybody else on account of their owning a large amount of paper taken from the various commission firms at the Kansas City Stockyards. * * * We had absolutely no claim on the cattle."

The Bank of Commerce, discovering that it had no lien on these cattle, in turn became anxious to get rid of them. The representative of the bank advised Munger of that fact, and inquired what should be done with the cattle. Thereupon it was agreed to turn them over to

Digitized by Google

the Siegel-Sanders Commission Company to sell. At that time the cattle were in a lot subject to the order of Munger, and he gave to Voorhees a "title order in blank for them."

"Q. Was there anything in this order that the National Bank of Commerce was to hold these cattle for the person who held rightful title to them? A. The title orders are blanks furnished by the stockyards, and they do not permit anything to be written on the order except the number of animals and to whom the stock belongs and to whom it is to be delivered. That order, then, had to be surrendered to the stockyards company."

On further cross-examination of Munger, the following occurred:

"Q. I will ask you to relate your conversation with Mr. Voorhees when you turned these cattle over to him? A. Mr. Voorhees told me that the National Bank of Commerce owned a large amount of Gillette paper; that they were trying to secure as many of the cattle as possible in which Gillette had any interest; and he told me, if they would turn the cattle over to them, they would be responsible to us—hold us harmless for the value of the cattle, if there were any one appeared who had a better right to them. Q. Is it not a fact that you turned these cattle over to the National Bank of Commerce because you thought that they were the most responsible parties, that they would be able to protect you against loss? A. That is partly, but not wholly, the reason. Q. What was the other reason? A. I thought the chances were that they would have a better right to the cattle than the other claimants, inasmuch as they had taken a large amount of this Gillette paper from the various commission merchants at the yards."

The Third National Bank of St. Louis (defendant below) at that time held a mortgage on Gillette cattle which it claimed covered the 128 head in question. Its claim was placed in the hands of Mr. Ball, an attorney of Kansas City, who applied to Rice Bros. & Nixon, and informed them that his client held a mortgage on the cattle, and demanded that they be turned over to him, when he was informed "that they had nothing more to do with it; that those cattle were in charge of Siegel-Sanders Commission Company for the Bank of Commerce, and they had nothing to do with it." Thereupon Mr. Ball demanded the cattle of said commission company. He was informed by them that the Bank of Commerce claimed them, and that they had the cattle for sale, and they would proceed to sell them and turn the money over to the Bank of Commerce. Mr. Ball further testified that it was suggested in the interview that, as the cattle were in the yards on expense, Siegel-Sanders Company could sell them and deposit the money in the Bank of Commerce until it could be ascertained whether the Third National Bank of St. Louis or the Bank of Commerce was entitled to it. When he applied to the Bank of Commerce, he learned from Mr. Winants (vice president) that the Siegel-Sanders Company had sold the cattle and kept the money, and the Bank of Commerce made no claim to it. He then applied to Siegel-Sanders Company for the proceeds, and received from them a check therefor, which he indorsed and forwarded to his client. He further stated that he did not remember the brand of the cattle, but:

"I remember that I claimed under what was known as the Dunlap mortgages, and that they bore the brands purporting to be covered by those mortgages."

Soon after the foregoing occurrences, a suit was instituted, of rather a peculiar comprehensive character, in the district court of Chase

Digitized by Google

county, Kan., by one of Gillette's mortgagees, asserting priority of right to certain of the Gillette cattle, including the 128 head in question. Rice Bros. & Nixon, among others, were made parties defendant, and appeared thereto. Although named as a defendant, the Third National Bank of St. Louis was not served with process and did not appear to that suit. After taking evidence, a decree was entered therein, by consent, determining the manner in which the funds in the hands of the receiver of that court arising from the sales of cattle to which there were conflicting claims should be apportioned among them; also rendering judgment against Rice Bros. & Nixon for the value of the cattle wrongfully taken by them as aforesaid. Having satisfied that judgment, Rice Bros. & Nixon at once instituted an action at law in the circuit court of Jackson county, Mo., against the National Bank of Commerce, based on said contract of indemnity between them, made on their behalf by Munger. They were defeated in that action, on the ground taken by the court that the contract was contrary to public policy. See 98 Mo. App. 696, 73 S. W. 930, where the case is reported. Nixon having retired from the copartnership, and one of the Rice Bros. having died, W. H. Rice, as surviving partner, instituted the present action against the defendant, the Third National Bank of St. Louis, to recover the money so received by it as aforesaid, and obtained judgment therefor.

The contention on the part of the plaintiff is that, although Rice Bros. & Nixon were trespassers ab initio in seizing the cattle, when they satisfied the judgment against them for the tort they became substituted to the owner's right to the cattle from the date of the conversion. The correctness of this, as a general proposition of law, may be conceded. Lovejoy v. Murray, 3 Wall. 11, loc. cit. 18 L. Ed. 129; Adams v. Broughton, Stra. 1078; 2 Kent's Comm. 388; Thayer v. Manley, 73 N. Y. 307; Smith v. Smith, 51 N. H. 571, which hold that the title so acquired by the tort-feasor takes effect from the time of the conversion. This, resting upon the maxim, 'solutio pretii emptionis loco habetur,' presumes that the wrongdoer is in possession of the property and has not voluntarily parted therewith to a third party. Judge Cooley, in his work on Torts (3d Ed., pp. 881, 882), says:

> "It was decided in Adams v. Broughton, Stra. 1078, that judgment in trover or trespass for the value of the property vested the title in the defendant; and this decision has been followed in this country to some extent. * * * The title by relation vests as of the time when the conversion took place; but this relation is not effectual for all purposes. It could not render a third party a trespasser upon the rights of the defendant for anything done by him intermediate the conversion and the judgment; and if, after conversion, the plaintiff sold his interest in the property, the purchaser will not be affected by the suit, * * * since by the sale he has disabled himself from passing title to the defendant."

In support of the text he cites the case of Bacon v. Kimmel, 14 Mich. 201, where the plaintiff brought trespass, and for the purpose of proving title introduced a judgment against him in favor of the mortgagee in a chattel mortgage from whom the property had been wrongfully taken, and which judgment was subsequent to the trespass complained of in the case. Judge Christiancy said that admitting the recovery of that judgment and its satisfaction by the plaintiff—

Digitized by Google

"had the effect as between them to vest the right of property and the possession in the plaintiff, and that as between them it related back, so as to perfect the plaintiff's title from the time of the trespass for which that judgment was obtained. Still it could not affect the defendants in this suit, so as to make them trespassers as against the plaintiff. * * * There is no evidence in the case tending to show that at any time during the period covered by the declaration the plaintiff had any right whatever to the property or its possession, nor tending to show that in obtaining possession the defendants were guilty of a trespass against any one, much less against the plaintiff. And, whatever effect the recovery and satisfaction of Wheeler's judgment against the plaintiff should have had as between them by relation back, it cannot by such relation make the defendants trespassers for acts which did not constitute a trespass as against the plaintiff at the time it was committed."

To sustain the action at bar, the learned counsel for the plaintiff assume, as indeed they must, first, that the National Bank of Commerce received the cattle from Rice Bros. & Nixon as mere bailees, or under an express or implied trust to hold them for the benefit of the rightful owner whenever he might appear; and, second, that Siegel-Sanders Commission Company took them impressed with a like trust, which followed and attached to the proceeds in the hands of the defendant in favor of the plaintiff as the cestui que trust. That Rice Bros. & Nixon turned the cattle over constructively to the National Bank of Commerce on the controlling assurance that the bank would hold them harmless is confirmed by the undisputed fact that immediately after Rice Bros. & Nixon satisfied the judgment against them they made demand on the Bank of Commerce, not for the proceeds of the sale of the cattle, which they knew had been turned over to the Third National Bank of St. Louis, but for the amount paid by them in satisfaction of said judgment, based on the promise of indemnity. In their petition, as disclosed in the reported case (98 Mo. App. 696, 73 S. W. 930), they alleged:

"That it was thereupon agreed between them and defendant that in consideration of their turning the cattle over to defendant the latter would indemnify and protect them against damages by reason of their act."

As stated by the court from the evidence:

"It was then agreed between plaintiffs and defendants that plaintiffs would turn the 128 head over to the defendants; the latter agreeing to indemnify them in case they were forced to respond to damages to the owner, or, indeed, to any one of superior right. Plaintiffs, as stated by their principal witness, were anxious to get the cattle into other hands, so as to rid themselves of liability. They did not have an opinion as to which of the several claimants of liens had the best right or title; but they decided to turn the cattle over to defendant, for the reason that they thought it to be more certainly responsible than the others."

Moreover, as already shown by the testimony of Mr. Ball, witness for the plaintiff, when the Bank of Commerce advised Mr. Munger that it made no claim to the cattle, to get out of the tangle Munger gave the blank "title order" for the transfer of the catle from their lot to that of Siegel-Sanders Commission Company to be sold. And when Mr. Ball applied to Rice Bros. & Nixon for the cattle, stating that the Third National Bank of St. Louis claimed them under mortgage, they distinctly disclaimed any interest in the cattle, and said they had turned them over to the bank. They were apprised, therefore, of the de-

Digitized by Google

fendant's assertion of right to the cattle, and they knew that the Siegel-Sanders Commission Company turned over the proceeds to the defendant. It does not now lie in the mouth of the plaintiff, as asserted in argument by his counsel, to say they do not know that the defendant ever held such mortgage. They were distinctly advised by Mr. Ball that his client asserted such mortgage, and they consented to what was done without asking to see the mortgage; and the trial in this case proceeded upon the theory that the plaintiff in the action in the Kansas district court claimed under mortgage superior in right to that of the defendant.

How, then, can it be legally possible for the plaintiff to maintain against the defendant the action for money had and received to his use? When demand was made upon them by Mr. Ball, they disclaimed any interest whatever in the cattle. There was, therefore, no fiduciary relation, or promise, either expressed or implied, between them and the defendant. It is an ancient and deep-rooted axiom of the common law, which "use has made familiar and time has rendered sacred," that "the law will not imply a promise where there was an express promise; so the law will not imply a promise of any person against his own express declaration, because such declaration is repugnant to any implication of a promise." Whiting v. Sullivan, 7 Mass. 107; Earle v. Coburn, 130 Mass. 596. While there are instances where the law will imply a promise to pay by a party who protests, as where the law creates a duty to perform that for which it implies a promise to pay, as in the illustration of the refusal of a man to furnish food and clothing to his wife and children, yet the rule is that such promise shall never be implied against protest, except in cases where the law itself imposes the duty, which must be a legal, and not a mere moral or sentimental duty. This idea is expressed by Woodruff, J., in Butterworth v. Gould, 41 N. Y. 463, as follows:

> "Where a defendant has received moneys due to the plaintiff but claiming it as his own under circumstances in which he has no authority from the plaintiff, and does not act under any pretense of such authority, and the payment to him is made in proposed recognition of his title thereto as his own, and does not operate to discharge the payor from his liability to the plaintiff, then and in such case there is no trust and no implied promise to pay the money to the plaintiff."

Had Rice Bros. & Nixon, after the conversion of the cattle, maintained the statu quo, retaining the cattle or the proceeds until they satisfied the judgment in trespass against them, their title would have attached as of the date of the conversion; and had the defendants in that situation, between the date of the conversion and the satisfaction of the judgment, tortiously taken the cattle or their proceeds from Rice Bros. & Nixon, they could have sued in trover, or have waived the trespass and brought action in assumpsit. But when, after the first conversion, the wrongdoers, as in this case, to extricate themselves, as they intended to do and supposed they were accomplishing, from ultimate liability and loss, voluntarily turned the property over to a third claimant, not in trust for themselves, but as an independent claimant, there was not an expressed or implied promise by the third person to answer to the assenting wrongdoer for the property. Multo fortiori,

Digitized by Google

they cannot maintain trespass or trover, as they assented to the taking. We are unable to find any precedent to support the action adopted by the plaintiff; and, in our judgment, established principles of law and procedure interdict it. The request of the defendant below for a directed verdict should have been given.

The judgment of the Circuit Court is therefore reversed, and the cause remanded, with direction to grant a new trial and for further proceedings in conformity with this opinion.

(161 Fed. 829.)

CONRAD INV. CO. v. UNITED STATES.

(Circuit Court of Appeals, Ninth Circuit. May 25, 1908.)

No. 1,530.

1. INDIANS—INDIAN LANDS—RESERVATION—APPROPRIATION OF WATERS—INDIAN TREATY.

Indian Treaty May 1, 1888, c. 213, 25 Stat. 124, establishing the Blackfeet Indian reservation, with the middle of the channel of Birch creek for its southern and southeastern boundary, which treaty was intended to promote the improvement, comfort, and welfare of the Indians, by aiding them to become self-supporting as an agricultural people, impliedly reserved to the Indians a prior right to a portion of the waters of such creek with which to irrigate the arid lands in the reservation, which right was paramount to that of persons subsequently taking up desert land claims on the public domain adjacent to the creek.

2. WATERS AND WATER COURSES—RESERVATION BY UNITED STATES.

The general government has power to reserve the waters on the public domain and exempt them from appropriation under state laws.

3. SAME—IRRIGATION—RIGHTS OF APPROPRIATORS—DIVISION.

Where the Indians on the Blackfeet reservation had a prior right to the use of the waters of Birch creek for irrigation to that of defendant, which had acquired by appropriation and purchase large quantities of land adjacent to the creek, which it had proceeded to irrigate by means of canals and a dam in the creek, a decree restraining defendant from obstructing the waters of the creek to the extent of 1,666⅔ inches from flowing down the channel to points of diversion for the benefit of the Indians on the reservation, and providing that the amount of water in excess of that specified in the decree should be subject to the subsequent order of the court, was proper.

4. SAME—PARTIES.

In trespass by the United States for the benefit of the residents of the Blackfeet Indian reservation for the taking of the waters of Birch creek to the prejudice of the Indians, settlers who had taken up land on the faith of contracts with defendant to furnish them water, and whose rights were derived solely from defendant, were not necessary parties.

5. APPEAL AND ERROR—REVIEW—COSTS.

If an appeal is taken from a decree on the merits, it will not be reversed on a question of costs.

[Ed. Note.—For cases in point, see Cent. Dig. vol. 3, Appeal and Error, § 4549.]

Appeal from the Circuit Court of the United States for the District of Montana.

For opinion below, see 156 Fed. 123.

Digitized by Google

for appellant.

Carl Rasch, U. S. Atty.

Before GILBERT, ROSS, and MORROW, Circuit Judges.

MORROW, Circuit Judge. This is an appeal from a decree entered in the United States Circuit Court for the District of Montana enjoining the defendant from obstructing the flow of a stream of water to the extent of interfering with the rights of the Indians on the Blackfeet Indian reservation. The controversy relates to the right to the flow of water in Birch creek, an unnavigable stream whose middle line forms the southern and southeastern boundary of a tract of land in the county of Teton, in the state and district of Montana, reserved by the United States government for the permanent home and abiding place of certain tribes of Indians, under the name of the Blackfeet Indian reservation.

It is alleged by the complainant, and admitted by defendant, that large portions of the lands embraced within said reservation are well adapted for stock raising, and other large portions are susceptible of cultivation; that large herds of cattle and large numbers of horses, the property of the government and of the Indians, have been and are now "pasturing and grazing upon said reservation and upon the lands within said reservation, being and situate along and bordering upon said Birch creek"; that in order to make the lands productive beyond the growth of natural grass irrigation is necessary; that the defendant, a Montana corporation, in the year 1900 constructed a dam in the channel of said Birch creek for the purpose of diverting certain waters of said creek into a canal constructed by defendant, and through said canal into ditches and reservoirs connected therewith; that defendant has used and still continues to use said canal, ditches, and reservoirs for such purpose. It appears that defendant's dam was reconstructed in 1904; that since such reconstruction—excepting in times of extreme high water, extending over not more than two or three weeks of the entire year—the dam is capable of turning all the waters of Birch creek, beyond a small amount of seepage, into defendant's canal; and that the creek below defendant's dam was practically dry at certain points during at least a portion of each of the summers of 1904 and 1905, which seems to have been a condition before unknown.

In Winters v. United States, 143 Fed. 740, 74 C. C. A. 666, and 148 Fed. 684, 78 C. C. A. 546, the controversy involved the right of the United States and of the Indians residing upon the Belknap Indian reservation to the use of 5,000 inches of the waters of Milk river for useful and beneficial purposes. The Indian reservation was established by the treaty between the United States and the Indians, under Act Cong. May 1, 1888, c. 213, 25 Stat. 113–133. The center of Milk river is the northern boundary line of the reservation throughout its entire width, and is the principal source of supply of water for the various uses of the government and the Indians for irrigation purposes generally upon the reservation. The water is diverted from the

Digitized by Google

river and distributed over the lands of the reservation by means of a canal and lateral ditches. The defendants in that case were settlers upon the public lands of the United States in the vicinity of Milk river, who had constructed a dam across the channel of Milk river above the reservation, and had appropriated and diverted the waters of Milk river at that point for the purpose of irrigating their lands, which they claimed the right to do under the desert land laws of the United States and the laws of the state of Montana authorizing the appropriation of the waters of the streams of that state for household, domestic, agricultural, irrigating, and other purposes. The action was brought by the United States to perpetually restrain the defendants from in any manner taking or diverting the waters of Milk river, and from in any manner impeding, obstructing, or preventing the waters of Milk river and its tributaries, to the amount of 5,000 inches, from flowing down the channel of the river to the point of diversion upon the reservation. A decree was entered in the Circuit Court for the District of Montana in favor of the complainant, and the defendants appealed. This court affirmed the decree, holding that the United States, by treaties with the Indians on the reservation, had impliedly reserved the waters of Milk river for the benefit of the Indians on the reservation to the extent reasonably necessary to enable them to irrigate their lands, and that grantees and settlers on public lands outside of the reservation could not acquire, under the desert land laws of the United States or the laws of the state of Montana relating to the appropriation of the waters of the streams of that state, the right to divert the waters of Milk river to the prejudice of the rights of the Indians residing upon that reservation. This decision has been affirmed by the Supreme Court of the United States in Winters v. United States, 207 U. S. 564, 28 Sup. Ct. 207, 52 L. Ed. 340. In the course of the decision, on page 577 of 207 U. S., page 212 of 28 Sup. Ct. (52 L. Ed. 340), the court said:

"The power of the government to reserve the waters and exempt them from appropriation under the state laws is not denied and could not be. United States v. Rio Grande Ditch & Irrigation Co., 174 U. S. 690, 702, 19 Sup. Ct. 770, 43 L. Ed. 1136; United States v. Winans, 198 U. S. 371, 25 Sup. Ct. 662, 49 L. Ed. 1089. That the government did reserve them we have decided, and for a use which would be necessarily continued through years."

The present case is in many respects similar to the Winters Case. The act of Congress of May 1, 1888, which ratified an agreement with certain Indians and established the Ft. Belknap Indian reservation, with the middle of the main channel of Milk river for its northern boundary, established also the Blackfeet Indian reservation, with the middle of the channel of Birch creek for its southern and southeastern boundary, and in this case the diversion of the waters of Birch creek by means of a dam is the subject of controversy, as the diversion of the waters of Milk river by means of a dam was the subject of controversy in the Winters Case. The law of that case is applicable to the present case, and determines the paramount right of the Indians of the Blackfeet Indian reservation to the use of the waters of Birch creek to the extent reasonably necessary for the purposes of irrigation and stock raising, and domestic and other useful purposes. The gov-

Digitized by Google

ernment has undertaken, by agreement with the Indians on these reservations, to promote their improvement, comfort, and welfare, by aiding them to become self-supporting as a peaceable and agricultural people. The lands within these reservations are dry and arid, and require the diversion of waters from the streams to make them productive and suitable for agricultural, stock raising, and domestic purposes. What amount of water will be required for these purposes may not be determined with absolute accuracy at this time; but the policy of the government to reserve whatever water of Birch creek may be reasonably necessary, not only for present uses, but for future requirements, is clearly within the terms of the treaties as construed by the Supreme Court in the Winters Case.

In the bill of complaint in this case it is alleged that:

"In the year 1898 your orator and the Indians residing upon said reservation, for the purpose of bringing water to and upon the lands of said Blackfeet Indian reservation, with which to irrigate the same, and raise thereon crops of grass, grain, and vegetables, appropriated, took, and diverted from the channel of said Birch creek, by means of canals, ditches, and waterways, large amounts, to wit, a flow of 2,000 cubic feet per minute, of the waters of said Birch creek, and by means of canals, ditches, and waterways conducted the waters of said creek, so taken and diverted from said Birch creek as aforesaid, from the channel of said creek to and upon divers and extensive tracts of lands upon said reservation, aggregating in amount about 10,000 acres of land, and after so conducting said waters to and upon said lands used the same for the irrigation of said lands, and for domestic and other useful purposes, and by means thereof raised upon said lands crops of grain, grass, and vegetables."

It is further alleged that, notwithstanding the rights of the complainant and of the Indians to the uninterrupted flow of all the waters of Birch creek down the natural channel of said creek, the defendant in the year 1900 wrongfully and unlawfully, and without the license, consent, or approval of the complainant or of the Indians residing upon the Blackfeet Indian reservation, entered upon said reservation and the said Birch creek above the points of the diversion of said waters of said creek by the complainant and the said Indians as aforesaid, and above the places of the use of said waters by the complainant and the Indians, and built and erected and constructed upon said reservation, and in and across the channel of said Birch creek, a large and substantial dam and reservoir, and by means of said dam and reservoir obstructed and prevented the waters of said Birch creek from flowing down the natural channel of said creek to the places of diversion and use of said waters of said creek by complainant and the said Indians.

The evidence on the part of the complainant in support of these allegations is to the effect that the Blackfeet Indian reservation covers a territory in the county of Teton, in the northwestern part of the state of Montana, about 40 miles east and west by 60 miles north and south, and containing about 900,000 acres. Portions of this land are suitable for grazing purposes, while other portions are adapted for agricultural purposes. The land is arid, and, where cultivated, requires water for irrigation. Birch creek, which forms the southern and southeastern boundary of the reservation, has carried at its lowest stage 2,500 inches of water, and at its highest stage 150,000 inches of water. In the reservation and north of Birch creek is a stream, called

Digitized by Google

Blacktail creek, which flows in the same general direction as Birch creek, and finally empties into that creek. Between Birch creek and Blacktail creek, and still north of Blacktail creek, there is a tract of land containing about 20,000 acres, 50 per cent. of which, or 10,000 acres, can be irrigated from Birch creek. In 1898 the government constructed a canal, about 5½ miles long, from Birch creek onto the lands in the reservation adjoining the creek. This canal had, when constructed, a capacity of 1,200 cubic feet of water per minute, or the equivalent of about 1,000 inches. Six lateral ditches have been extended from this canal. In addition to the canal and its lateral ditches, there are four other ditches taking water from the creek onto the lands of the reservation. These four ditches have an aggregate capacity for carrying and distributing 1,740 inches of water.

Defendant, in its answer, admits the construction of a dam across the channel of Birch creek, as alleged in the complaint. The evidence on the part of the complainant was in substance to the effect that the water of Birch creek allowed to escape over this dam was not sufficient to be depended upon for any kind of a practical use of the government ditch; that much of the time during the summers of 1904 and 1905 there was practically no water running in Birch creek at the head of the government ditch; that even the springs which had theretofore assisted in feeding the stream had diminished or disappeared, showing that they were fed by underflow of the stream from above and that their source had been cut off; that the government had theretofore attained a certain amount of success in accomplishing its purpose in establishing the reservation, to get its Indian wards interested in agricultural pursuits, but that since the building of defendant's dam had cut off the former abundant supply of water the Indians, who had begun to take some interest in agricultural pursuits, had become discouraged; that the climate was such as to make some extra winter care and feeding necessary for anything like success in the handling of live stock; that without irrigation it was impossible to raise grain or a crop of grass heavy enough to cut for winter feeding, which condition had compelled the Indians to dispose of their stock, which had theretofore been summered on the government's fenced inclosure and wintered by the Indian owners on their several allotments of land on the unfenced strip along Birch creek; and that for that reason the Indian population on this strip had decreased in numbers and those remaining had made no substantial progress. The testimony on the part of the defendant is that the ditches on the reservation are out of repair and do not carry any such amount of water as claimed by the complainant, and that 400 inches of water is sufficient for all purposes on that part of the reservation where the water of Birch creek can be distributed and used; that the defendant has constructed a canal on the south side of Birch creek, with a carrying capacity of 20,000 inches, and that defendant has appropriated that amount of the water of Birch creek; that when the enterprise was inaugurated the defendant owned 11,000 acres of land which it proposed to irrigate with the waters flowing through its canal; that its holdings of land have steadily increased by purchases from the government and from individuals, who have acquired title by homestead,

Digitized by Google

in this case it owned about 44,000 acres of land capable of irrigation from its canal; that the value of the property of the defendant employed in its system of irrigation was about $500,000.

Conceding that the defendant's enterprise is all that it claims, it is still subject to the rights of the Indians on the reservation in the diversion of the waters of Birch creek, and the question remains to be determined: What, under all the circumstances, is the government entitled to reserve for their uses? The court below in its decree does not direct the removal of defendant's dam from the channel of Birch creek, but has enjoined the defendant from in any manner or by any means impeding, preventing, or obstructing the waters of said creek to the amount and extent of 1,666⅔ inches, or the equivalent of 33⅓ second feet, from flowing down the natural channel of said creek and the points of diversion and places of use established by the complainant for the benefit of the Indians on the reservation. This decree does not at any time reserve all the waters of Birch creek for the complainant, but leaves a considerable flow of water to be retained by defendant's dam and used in its system of irrigation; and, after a careful examination of the evidence, we are of opinion that the decree of the Circuit Court is entirely reasonable and just, and should be affirmed in this respect.

It is objected that certain parties mentioned in defendant's amended answer were necessary parties to the action, and that without them there was a defect of parties. The amended answer, referring to lands on the south and southeast of Birch creek under defendant's irrigation system, alleges that settlers in large numbers settled upon the said lands and entered into agreements with the defendant, whereby the defendant undertook to furnish such settlers with water sufficient to irrigate the lands settled upon by them, and they reciprocally agreed to take and pay for such water; that a great number of the said settlers entered the lands settled upon by them under the provisions of the desert land act, and made proof of their settlement upon and reclamation of the same; that a large number of the settlers, with a view of obtaining patents under the desert land act, set forth in their proofs that they had obtained the right, as the fact was, to obtain water from the said canal and ditches of the defendant; that such proofs were approved by the local land office, the Commissioner of the General Land Office, and the Secretary of the Interior; that the right of such settlers to have and take water from the said ditches for the irrigation of their lands became by contract for the same appurtenant to said lands and inseparably annexed thereto. This is an action of trespass, where the acts of the defendant constitute the cause of action. The rights of the parties, referred to in the amended answer, to the water of Birch creek, were derived from the defendant and remain subject to its rights. They are not separate and distinct rights, and in the nature of the case could not be. The parties who purchase water from the defendants do not divert the water from Birch creek, and have acquired no right of diversion independent of the defendant's right. It follows that in any controversy respecting such right upon the facts in this case the defendant represents the entire claim of right.

Digitized by Google

It is further objected that the decree of the Circuit Court provides that, whenever the needs and requirements of the complainant for the use of the waters of Birch creek for irrigating and other useful purposes upon the reservation exceed the amount of water reserved by the decree for that purpose, the complainant may apply to the court for a modification of the decree. This is entirely in accord with complainant's rights as adjudged by the decree. Having determined that the Indians on the reservation have a paramount right to the waters of Birch creek, it follows that the permission given to the defendant to have the excess over the amount of water specified in the decree should be subject to modification, should the conditions on the reservation at any time require such modification.

The award of costs in favor of complainant is not a subject of appeal. If an appeal be taken from a decree upon the merits, it will not be reversed upon the question of costs. Du Bois v. Kirk, 158 U. S. 58, 67, 15 Sup. Ct. 729, 39 L. Ed. 895.

The decree of the Circuit Court is affirmed.

(161 Fed. 835.)

RAINBOW et al. v. YOUNG, Sheriff.

(Circuit Court of Appeals, Eighth Circuit. June 8, 1908.)

No. 2,642.

INDIANS—RESERVATIONS—INTRUDERS—AUTHORITY TO REMOVE.

Under Rev. St. §§ 441, 463, 2058, 2149 (U. S. Comp. St. 1901, pp. 252, 262), the Commissioner of Indian Affairs is authorized, with the approval of the Secretary of the Interior, to cause collectors to be excluded and removed from a tribal Indian reservation on days when payments are being made to the Indians, if in his judgment the presence of collectors therein at such times is detrimental to the peace and welfare of the Indians; and this although the reservation be within a state and the Indians be the holders, under trust patents issued to them pursuant to Act Feb. 8, 1887, c. 119, 24 Stat. 388, of allotments adjacent to the reservation, and be, therefore, citizens of the United States and the state.

(Syllabus by the Court.)

Appeal from the Circuit Court of the United States for the District of Nebraska.

See 154 Fed. 489, 83 C. C. A. 421.

A. W. Lane, Asst. U. S. Atty. (Charles A. Goss, U. S. Atty., on the brief), for appellants.

Thomas L. Sloan (W. E. Whitcomb, on the brief), for appellee.

Before VAN DEVANTER and ADAMS, Circuit Judges, and RINER, District Judge.

VAN DEVANTER, Circuit Judge. This appeal calls in question an order discharging a writ of habeas corpus. There is no controversy about the facts, which are as follows: The appellants are Indian policemen at the Winnebago Indian Reservation, in Thurston county, Neb. That reservation consists of 400 acres of land belonging to the United States upon which it maintains an Indian agency and an Indian train-

Digitized by Google

ing school for the benefit of the Winnebago tribe, to the members of which allotments in severalty of the adjacent lands have been made under Act Feb. 8, 1887, c. 119, 24 Stat. 388. The duties of an Indian agent at that agency, or at least such of them as pertain to the matters here stated, have been devolved upon the superintendent of the training school under a provision in Act March 3, 1903, infra. Somewhat recently, when payments of certain lease moneys were about to be made at that agency to the members of the tribe by such superintendent, he was directed by the Commissioner of Indian Affairs to require collectors to remain away from the agency on the days when the payments were being made; and among those who were duly notified of that direction was Thomas L. Sloan, an attorney of Pender, Neb. On one of the days fixed for making the payments Mr. Sloan, disregarding the notice so given to him, went to the agency for the purpose of making collections from Indians to whom lease moneys were then to be paid. After he had made some collections, and while he was there for the purpose of making others, he was requested by the superintendent to leave the agency and to remain away during the day so fixed for making the payments. He refused to do so, and the appellants then removed him from the reservation, and also prevented him from returning to the agency during that day. In doing so they acted under a verbal order given to them as members of the agency police by the superintendent, who was executing the commissioner's direction. The appellants used no more force than was necessary, and did nothing of which Mr. Sloan could complain, if the superintendent's order to them was a lawful one. Subsequently they were taken into custody by the appellee upon a warrant issued by the county judge of Thurston county upon a complaint made by Mr. Sloan, wherein he charged them with a criminal assault under the laws of the state of Nebraska by reason of their removal of him from the reservation in the circumstances just stated. While they were so in custody and awaiting a trial or examination, a writ of habeas corpus was sued out in their behalf upon a petition presented to the Circuit Court of the United States for the District of Nebraska, wherein it was alleged that their imprisonment was unlawful because the act with which they were charged was done in the discharge of a duty placed upon them as agency policemen in pursuance of a law of the United States. At the final hearing upon the petition, the Circuit Court was of opinion that there was no statutory authority for the direction given by the commissioner, and that it was invalid in the absence of such authority, and so discharged the writ and remanded the appellants to the appellee's custody.

Of the questions discussed by counsel, we deem it necessary to here notice the single one of the commissioner's authority to give the direction which was disregarded by Mr. Sloan and in the orderly execution of which he was removed from the reservation. While the members of the Winnebago tribe have received allotments in severalty and have become citizens of the United States and of the state of Nebraska, their tribal relation has not been terminated. They are not permitted to alienate, mortgage, or lease their allotments without the sanction of the Secretary of the Interior. Their lease moneys are collected and

Digitized by Google

disbursed by officers of the United States. Their lands and some at least of their other property are not taxable; and the United States maintains a reservation, an agency, and a training school for their benefit. In short, they are regarded as being in some respects still in a state of dependency and tutelage which entitles them to the care and protection of the national government; and when they shall be let out of that state is for Congress alone to determine. United States v. Rickert, 188 U. S. 432, 23 Sup. Ct. 478, 47 L. Ed. 532; Matter of Heff, 197 U. S. 488, 25 Sup. Ct. 506, 49 L. Ed. 848; Cherokee Nation v. Hitchcock, 187 U. S. 294, 307, 308, 23 Sup. Ct. 115, 47 L. Ed. 183; McKay v. Kalyton, 204 U. S. 458, 27 Sup. Ct. 346, 51 L. Ed. 566; Dick v. United States, 208 U. S. 340, 28 Sup. Ct. 399, 52 L. Ed. 520; United States v. Thurston County, 74 C. C. A. 425, 143 Fed. 287; Hollister v. United States, 76 C. C. A. 337, 145 Fed. 773; Beck v. Flournoy, etc., Co., 12 C. C. A. 497, 65 Fed. 30; United States v. Mullin (D. C.) 71 Fed. 682. Besides, the reservation from which Mr. Sloan was removed is the property of the United States, is set apart and used as a tribal reservation, and in respect of it the United States has the rights of an individual proprietor (see Commonwealth v. Clark, 2 Metc. [Mass.] 23; Commonwealth v. Dougherty, 107 Mass. 243; Low v. Elwell, 121 Mass. 309, 23 Am. Rep. 272; Fossbinder v. Svitak, 16 Neb. 499, 20 N. W. 866; Harshman v. Rose, 50 Neb. 113, 69 N. W. 755), and can maintain its possession and deal with intruders in like manner as can an undividual in respect of his property (Camfield v. United States, 167 U. S. 518, 524, 17 Sup. Ct. 864, 42 L. Ed. 260; Jourdan v. Barrett, 4 How. 168, 185, 11 L. Ed. 924; Stephenson v. Little, 10 Mich. 433). With these observations, we turn to the statutes bearing upon the authority of the Commissioner of Indian Affairs, and in considering them it is well to remember, as was said in United States v. Macdaniel, 7 Pet. 1, 14, 8 L. Ed. 587, that:

"A practical knowledge of the action of any one of the great departments of the government must convince every person that the head of a department, in the distribution of its duties and responsibilities, is often compelled to exercise his discretion. He is limited in the exercise of his powers by the law; but it does not follow that he must show statutory provision for everything he does. No government could be administered on such principles. To attempt to regulate by law the minute movements of every part of the complicated machinery of government would evince a most unpardonable ignorance on the subject. Whilst the great outlines of its movements may be marked out, and limitations imposed on the exercise of its powers there are numberless things which must be done, that can neither be anticipated nor defined, and which are essential to the proper action of the government."

The Revised Statutes contain these sections:

"Sec. 441 (U. S. Comp. St. 1901, p. 252). The Secretary of the Interior is charged with the supervision of public business relating to the following subjects: * * * Third, The Indians."

"Sec. 463. The Commissioner of Indian Affairs shall, under the direction of the Secretary of the Interior, and agreeably to such regulations as the President may prescribe, have the management of all Indian affairs, and of all matters arising out of Indian relations."

"Sec. 2058. Each Indian agent shall, within his agency, manage and superintend the intercourse with the Indians agreeably to law; and execute and perform such regulations and duties, not inconsistent with law, as may be

Digitized by Google

prescribed by the President, the Secretary of the Interior, the Commissioner of Indian Affairs, or the Superintendent of Indian Affairs."

"Sec. 2149. The Commissioner of Indian Affairs is authorized and required, with the approval of the Secretary of the Interior, to remove from any tribal reservation any person being thereon without authority of law, or whose presence within the limits of the reservation may, in the judgment of the commissioner, be detrimental to the peace and welfare of the Indians; and may employ for the purpose such force as may be necessary to enable the agent to effect the removal of such person."

And in Act March 3, 1903, c. 994, 32 Stat. 982, is the following:

"That the Commissioner of Indian Affairs, with the approval of the Secretary of the Interior, may devolve the duties of any Indian agency or any part thereof upon the superintendent of the Indian training school located at such agency whenever in his judgment such superintendent can properly perform the duties of such agency."

No other statute imposes any limitation applicable here upon the exercise of the authority so given to the Commissioner, and upon this record it cannot reasonably be doubted that the commissioner, in giving to the superintendent the direction before named, acted with the approval of the Secretary of the Interior. Wilcox v. McConnel, 13 Pet. 498, 513, 10 L. Ed. 264; Confiscation Cases, 20 Wall. 92, 109, 22 L. Ed. 320; Wolsey v. Chapman, 101 U. S. 755, 769, 25 L. Ed. 915; United States v. Fletcher, 148 U. S. 84, 13 Sup. Ct. 552, 37 L. Ed. 378; In re Brodie, 63 C. C. A. 419, 422, 128 Fed. 665, 668.

In our opinion the very general language of the statutes makes it quite plain that the authority conferred upon the Commissioner of Indian Affairs was intended to be sufficiently comprehensive to enable him, agreeably to the laws of Congress and to the supervision of the President and the Secretary of the Interior, to manage all Indian affairs, and all matters arising out of Indian relations, with a just regard, not merely to the rights and welfare of the public, but also to the rights and welfare of the Indians, and to the duty of care and protection owing to them by reason of their state of dependency and tutelage. And, while there is no specific provision relating to the exclusion of collectors from Indian agencies at times when payments are being made to the Indians, it does not follow that the commissioner is without authority to exclude them; for by section 2149 he is both authorized and required, with the approval of the Secretary of the Interior, to remove from any tribal reservation "any person" whose presence therein may, in his judgment, be detrimental to the peace and welfare of the Indians. This applies alike to all persons whose presence may be thus detrimental, and commits the decision of that question to the commissioner. Of course, it is necessary to the adequate protection of the Indians and to the orderly conduct of reservation affairs that some such authority should be vested in some one, and it is in keeping with other legislation relating to the Indians that it should be vested in the commissioner. United States ex rel. West v. Hitchcock, 205 U. S. 80, 27 Sup. Ct. 423, 51 L. Ed. 718. There is no provision for a re-examination by the courts of the question of fact so committed to him for decision, and, considering the nature of the question, the plenary power of Congress in the matter, and the obvious difficulties in the way of such a re-examination, we think it is intended that there shall be none. United States

Digitized by Google

ex rel. West v. Hitchcock, supra; Stanclift v. Fox, 81 C. C. A. 623, 152 Fed. 697.

It follows that the commissioner's direction to the superintendent and the latter's verbal order to the agency policemen were given in the exercise of a lawful authority, and therefore that what was done by the policemen was done in the lawful discharge of a duty placed upon them in pursuance of a law of the United States.

The order of the Circuit Court is accordingly reversed, with a direction to discharge the appellants from custody.

(161 Fed. 839.)

NATIONAL BANK OF COMMERCE OF SEATTLE v. DOWNIE et al. (two cases).

SEATTLE NAT. BANK v. SAME (two cases).

(Circuit Court of Appeals, Ninth Circuit. May 11, 1908.)

Nos. 1,527, 1,528, 1,529, 1,532.

BANKRUPTCY—SECURED CLAIMS—ASSIGNMENT OF CLAIMS AGAINST UNITED STATES.

Under Rev. St. § 3477 (U. S. Comp. St. 1901, p. 2320), providing that assignments of claims upon the United States shall be void unless witnessed and acknowledged and made after the claim has been allowed and a warrant drawn therefor, the assignment by a bankrupt to a bank, as collateral security for money borrowed, of claims against the United States under contracts only partially performed, such assignments not being witnessed or acknowledged, was ineffective, and the claims passed by operation of law to the bankrupt's trustee for the benefit of general creditors.

Appeal and Petition for Revision of Proceedings of the District Court of the United States for the Northern Division of the Western District of Washington.

Bausman & Kelleher, for Seattle Nat. Bank.
George E. de Steiguer, for National Bank of Commerce of Seattle.
Peters & Powell and Cooley & Horan, for appellees.
Kerr & McCord, for trustee.

Before GILBERT, ROSS, and MORROW, Circuit Judges.

MORROW, Circuit Judge. Arthur Gamwell and Philip Wheeler, partners under the firm name of Gamwell & Wheeler, were adjudged bankrupts in the District Court of the United States for the Western District of Washington, Northern Division, on the 16th day of April, 1907, and the same day R. E. Downie was appointed receiver of the partnership property. Thereafter he was elected and qualified as permanent trustee, and by an order made June 20, 1907, was authorized to collect all sums of money due the bankrupts from the United States government or any department thereof. On the 4th day of June, 1907, the National Bank of Commerce of Seattle filed its proof of debt against the bankrupt partnership, in the sum of $37,149.85. The proof set forth that the only securities held by said corporation for

Digitized by Google

said debt were certain described claims against the United States government on account of supplies furnished and assigned to the bank by the said Gamwell & Wheeler to secure said indebtedness. These claims appear to be 16 in number, and amount in the aggregate to the sum of $33,517.48. The first claim is dated December 10, 1906, and the last February 15, 1907. On June 18, 1907, the Seattle National Bank filed its proof of debt against the bankrupt partnership for the sum of $22,582.19, with interest. The proof set forth that the only securities held by said corporation for said debt were certain described claims against the United States government on account of supplies furnished and assigned to the bank by said Gamwell & Wheeler to secure said indebtedness. The claims appear to be 61 in number and amount in the aggregate to $38,509.32. The first claim is dated September 25, 1906, and the last April 4, 1907.

The respondents filed objections to the allowance of these assigned securities. One of these objections was that the assignments were invalid under section 3477 of the Revised Statutes of the United States (U. S. Comp. St. 1901, p. 2320), and that the claims against the government belonged to the creditors of the bankrupts generally.

On the 10th of July, 1907, the parties hereto entered into a stipulation as to said assigned claims, as follows:

"That the facts in relation to the claims against the government of the United States, assigned by said bankrupts to the above-mentioned banks as collateral security for the indebtedness due from said bankrupts to said banks, and to the allowance of which claims as security for such indebtedness the above-named trustee and the Barber Asphalt Paving Company and the Mukilteo Lumber Company have objected to, are as follows: That each and all of said claims against the United States government, so assigned, were claims for money due from the government of the United States to the said bankrupt upon account of contracts entered into between said bankrupts and the United States, for the furnishing of materials by said bankrupts to various departments of said government. That said assignments were each and all voluntarily made in consideration of a loan made by said bank to said bankrupts at the time of said assignments and as collateral security for the repayment of said loans and without notice to the other creditors of said bankrupts. That all of such assignments were made after the entering into of said contracts, and after partial performance thereof by said bankrupts before the allowance of any of such claims or the ascertainment of the amount due thereon, or the issuing of any warrant for the payment thereof, and that none of said assignments were executed in the presence of any witnesses at all, and that none of them recite any warrant for the payment of the claim assigned, and that none of them were acknowledged by any officer having authority to take acknowledgment of deeds, or any other acknowledging officer at all, and that none of them were certified as being acknowledged by any officer. The said loans to each of said banks exceeded in amount the value of said collaterals so assigned to secure the same, and there is now due to each of said banks on account of said loans an amount in excess of the value of the said collaterals so assigned to each of said banks respectively. The claims of said banks and the objections thereto on file are made a part hereof."

The referee in bankruptcy, on the 22d of July, 1907, allowed the claim of the Seattle National Bank in the sum of $22,582.19, and interest, and the claim of the National Bank of Commerce in the sum of $37,149.85, and interest, and ordered and decreed that said banks were each of them respectively entitled to receive on account of claims against the United States government, so assigned to it and shown by

Digitized by Google

the claims of said bank respectively on file, whatever amount might be collected from the United States government of said claims, and the securities of said banks by reason thereof were allowed, and the trustee was ordered, as collections of said claims were made, to pay the same to the banks holding the assignments thereof. Thereupon the respondents, except the trustee, petitioned the District Court for a review of the order of the referee. Upon this review the judge of the District Court allowed the claims of the banks as general debts, but disallowed their claims of preference. The National Bank of Commerce of Seattle and the Seattle National Bank have brought this matter to this court for review, both by appeal and by petition.

The appellees rely upon the provisions of section 3477 of the Revised Statutes of the United States to support the order of the District Court. That section is as follows:

"All transfers and assignments made of any claim upon the United States, or of any part or share thereof, or interest therein, whether absolute or conditional, and whatever may be the consideration therefor, and all powers of attorney, orders, or other authorities for receiving payment of any such claim, or of any part or share thereof, shall be absolutely null and void, unless they are freely made and executed in the presence of at least two attesting witnesses, after the allowance of such a claim, the ascertainment of the amount due, and the issuing of a warrant for the payment thereof. Such transfers, assignments, and powers of attorney, must recite the warrant for payment, and must be acknowledged by the person making them, before an officer having authority to take acknowledgments of deeds, and shall be certified by the officer; and it must appear by the certificate that the officer, at the time of the acknowledgment, read and fully explained the transfer, assignment, or warrant of attorney to the person acknowledging the same."

This statute has been before the court in a number of cases and held applicable to all cases where the assignee seeks to enforce the assigned claim against the United States. United States v. Gillis, 95 U. S. 407, 416, 24 L. Ed. 503; St. Paul R. R. Co. v. United States, 112 U. S. 733, 28 L. Ed. 861.

In United States v. Gillis, supra, it was contended on behalf of the assignee of the claimant that the statute was applicable only to claims asserted before the Treasury Department, but the court said:

"We discover nothing in the reason, nothing in the mischief the act is plainly intended to remedy, and nothing in the language employed tending to warrant the admission of any exceptions from the comprehensive provisions made, nothing that can justify our holding that when Congress said all transfers or assignments, partial or entire, absolute or conditional, of claims against the United States shall be null and void, they meant they should be in operation (inoperative) only when presented to the accounting officers of the treasury, but effective when presented everywhere else."

It has also been held applicable to assignments in which a contract is made for the prosecution of a claim against the United States and an assignment is made of a portion of the claim or a lien created on it to secure payment for services rendered in prosecuting the claim. Ball v. Halsell, 161 U. S. 72, 16 Sup. Ct. 554, 40 L. Ed. 622; Nutt v. Knut, 200 U. S. 12, 26 Sup. Ct. 216, 50 L. Ed. 348. In the latter case the court, referring to the clause in the contract making the payment of the attorney's compensation a lien upon the claim asserted against the the government, said:

Digitized by Google

"In effect or by its operation it transferred or assigned to the attorney, in advance of the allowance of the claim, such an interest as would secure the payment of the fee stipulated to be paid. All this was contrary to the statute, for its obvious purpose, in part, was to forbid any one who was a stranger to the original transaction to come between the claimant and the government, prior to the allowance of a claim, and who, in asserting his own interest or share in the claim, pending its examination, might embarrass the conduct of the business on the part of the officers of the government."

It has also been held applicable to assigned orders drawn by the owner of a claim against the United States upon the attorneys employed by him in the prosecution of the claim, directing them to pay to a third person certain sums out of any money coming into their hands on account of the claim. Spofford v. Kirk, 97 U. S. 484, 24 L. Ed. 1032. In this case the court, referring to the language of the statute, says:

"It would seem to be impossible to use language more comprehensive than this. It embraces alike the legal and equitable assignments. It includes powers of attorney, orders, or other authorities for receiving payment of any such claim, or any part or share thereof. It strikes at every derivative interest, in whatever form acquired, and incapacitates every claimant upon the government from creating an interest in the claim in any other than himself."

On the other hand, it has been held that the statute does not render invalid an assignment where the original claimant became a bankrupt and assigned his property to an assignee in bankruptcy. "It does not embrace cases where there has been a transfer of title by operation of law. The passing of claims to heirs, devisees, or assignees in bankruptcy is not within the evil at which the statute aimed." Erwin v. U. S., 97 U. S. 393, 397, 24 L. Ed. 1065.

It has also been held: That the statute did not embrace the case of a voluntary general assignment by an insolvent for the benefit of his creditors. Goodman v. Niblack, 102 U. S. 556, 26 L. Ed. 226; Butler v. Goreley, 146 U. S. 303, 13 Sup. Ct. 84, 36 L. Ed. 981. That it does not render invalid a contract of partnership to furnish supplies to the United States or a promise by one to another of the partners to pay a sum already due him under the partnership articles out of money to be received from the United States for such supplies. Hobbs v. McLean, 117 U. S. 567, 6 Sup. Ct. 870, 29 L. Ed. 940. That it does not affect the right of a mortgagee of real estate leased to the United States, or of a pledgee of the funds thereof, to recover from the mortgagors or pledgors the amount of funds paid to them by the United States. Freedman Saving & Trust Co. v. Shepherd, 127 U. S. 494, 8 Sup. Ct. 1250, 32 L. Ed. 163 and Shepherd v. Thomson, Id. That its inhibition of powers of attorney, executed in advance of the allowance of the claim and the issuing of a warrant therefor, cannot be used to compel a second payment after the amount thereof has been paid to the person authorized by the claimant to receive it. Bailey v. United States, 109 U. S. 432, 3 Sup. Ct. 272, 27 L. Ed. 988. That it does not prevent any court of competent jurisdiction as to subject-matter and parties from making such orders as may be necessary or appropriate to prevent one who has a claim for money against the government from withdrawing the proceeds of such claim from the reach of creditors, provided such orders do not interfere with the examination and allowance or rejection of such claim by the proper officers of the

Digitized by Google

government, nor in any wise obstruct any action that such officers may legally take under the statute relating to allowance or payment of claims against the United States. Price v. Forrest, 173 U. S. 410, 423, 19 Sup. Ct. 434, 43 L. Ed. 749. The purpose of the statute is to protect the government, and not the parties to the assignment. Goodman v. Niblack, supra. Hence, where a claim has been allowed by the accounting officers of the United States, a warrant issued therefor and delivered to the claimant, the government is no longer concerned with his disposition of the draft or the funds which it represented. York v. Conde, 147 N. Y. 486, 42 N. E. 193; Farmers' National Bank v. Robinson, 59 Kan. 777, 53 Pac. 762.

In the present case, the claims of Gamwell & Wheeler against the government of the United States were voluntarily assigned after entry into the contracts and after partial performance, but before the allowance of any such claims, the ascertainment of the amount due thereon, or the issuing of any warrant for the payment thereof. None of the assignments was executed in the presence of any witnesses, and none of them recites any warrant for the payment of the claims assigned, and none of them was acknowledged by any officer having authority to take acknowledgments of deeds, and none of them was certified as being acknowledged by any officer. These assignments are therefore within the express language of the statute, and not within any of its exceptions. They are also within the terms of the statute as interpreted by the Supreme Court in Spofford v. Kirk, supra, in St. Paul & Duluth R. R. v. United States, supra, in Ball v. Halsell, supra, and not within the exceptions mentioned in any of the other cases to which reference has been made. But the transfer of these claims to the trustee in bankruptcy by operation of law comes within the exception declared by the Supreme Court in Erwin v. United States, supra. It follows that the assignments in question are null and void, and that the trustee in bankruptcy is the proper person to receive from the officers of the United States government any and all sums due to the said bankrupts, which, when received, are a part of the general assets of the bankrupt's estate for the benefit of all creditors alike, and without any preference in favor of either of said banks.

The order of the District Court in each of the above-entitled cases is affirmed.

(161 Fed. 843.)

CONSTANTINE & PICKERING S. S. CO. v. AUCHINCLOSS et al. (two cases).

McLEAN et al. v. SAME.

(Circuit Court of Appeals, Second Circuit. May 22, 1908.)

(Nos. 234–236.)

SHIPPING — DEMURRAGE — CONSTRUCTION OF CHARTER PARTY — "LOADING BERTH."

Charter parties required the vessel in each case to load a cargo of phosphate at Port Inglis, Fla., and provided that the vessel should proceed to the Port Inglis anchorage, "or as near thereunto as she may safely get, and there load. * * * The cargo to be brought alongside

Digitized by Google

and taken from alongside free of risk and expense to the vessel, any custom of the port to the contrary notwithstanding. * * * Steamer or vessel to proceed to safe anchorage at port of loading and there load." Also: "The cargo to be supplied at the average rate of not less than 400 tons per weather working day, * * * commencing 24 hours after vessel is in loading berth and is ready to receive cargo and written notice given to that effect." Vessels were obliged to load at such port some miles from shore, and the government had established there two loading buoys. Three vessels were ordered to proceed to the port at the same time, and they reached there and anchored, and gave notice that they were ready to load. *Held*, that the "loading berth" referred to in the charter was the "safe anchorage" spoken of in the prior clause; that, having reached such anchorage and given the required notice, the lay days commenced, and the charterer could not require the vessels to await their turn at the loading buoys before the time commenced, even though that may have been the custom of the port, nor avoid liability for demurrage because of their detention for two or three weeks beyond the time, either because they could not get to the buoys or because they could not, perhaps have been fully loaded where they lay—its duty being to load them there, so far as could be safely done, and then permit them to move further out for its completion.

[Ed. Note.—Demurrage, see notes to Harrison v. Smith, 14 C. C. A. 657; Randall v. Sprague, 21 C. C. A. 337; Hagerman v. Norton, 46 C. C. A. 4.]

Appeal from the District Court of the United States for the Southern District of New York.

The final decrees of the District Court awarded demurrage, amounting in the aggregate to $7,390.65, to the libelants for the detention of their steamships Queenswood, Homewood, and Moness at Port Inglis, Fla., in the winter of 1905–06.

Miller, King, Lane & Trafford (Benjamin A. Morton and William S. Montgomery, of counsel), for appellant.

Convers & Kirlin (Orville C. Sanborn, of counsel), for appellees.

Before LACOMBE, COXE, and NOYES, Circuit Judges.

COXE, Circuit Judge. The judge of the District Court decided that the charterers were under obligation to furnish the vessels safe berths at which they could load within a reasonable time and that, failing to do so, they were liable for demurrage under the provisions of the charter. We think this conclusion was correct. The vessels were chartered to carry cargoes of phosphate from Port Inglis to Europe and were detained from 2 to 3 weeks from the expiration of their lay days if computed as commencing 24 hours after the entry of the vessels at the custom house and notice of their readiness to receive cargo. To be more accurate, the Queenswood was delayed 14 days and 22 hours, the Homewood 13 days and 14¾ hours and the Moness 22 days and 3½ hours.

The respondents seek to escape liability for this admitted delay by the contention that the government had located two loading buoys at the so-called harbor of Port Inglis, which is eight miles from the coast, and that by the terms of the charters lay days did not begin to run until 24 hours after the vessels were actually anchored at one of these buoys and that the custom of the port required that vessels should take precedence at these two loading berths according to the date of their

Digitized by Google

entry at the custom house. In other words, it is argued, if the two loading berths were occupied by vessels having prior entry at the custom house, that the charterers could keep the chartered vessels idle for a week, a month or three months without incurring the slightest liability.

When the Queenswood, Homewood and Moness arrived November 16th, 28th and 30th, respectively, they anchored in 22½ feet of water, except the Homewood, which anchored in 22 feet. When loaded these vessels drew 20 feet, 17 feet 3 inches and 20 feet 3 inches, respectively, at their deepest point. As to the Homewood there can be no question that, allowing for the slight rise and fall of the tide, she had at least 4½ feet of water at all times under her keel. We fail to see, as to her, at least, how any excuse is established based upon insufficient depth of water. As to the other two it may be that when the loading had progressed to a point where there was but 2 or 3 feet of water under the bottom, it should have been suspended until the vessel was removed to a loading buoy or to a point further out where the water was deeper. This course, it appears, was frequently pursued in the case of deep draft vessels.

We fail to understand why the loading could not have been begun and continued so long as there was not the slightest danger of the vessels touching bottom. If the respondents' contention in this regard be well founded, it will apply to vessels drawing 10 feet as well as those drawing 20 feet when loaded. The former can be held in idleness at the will of the charterer although the danger from insufficient depth of water could by no possibility be a factor in the case. To illustrate: A. charters B.'s vessel, which draws 20 feet loaded, to proceed to a designated pier for a cargo of coal, the pier having 30 feet of water at its outer end and but 15 feet at its shore end. When the vessel arrives she finds the outer end of the pier occupied by another vessel and she immediately makes fast to the pier between this vessel and the shore end and notifies the charterer that she is ready to receive the cargo. Would the latter be justified in refusing to furnish it on the ground that she was not in a safe berth? On the contrary would it not be his duty to load her as fast as practicable and move her into deeper water to receive the remainder of the cargo as soon as the other vessel had vacated the berth at the end of the pier? We see no distinction in principle between the two cases. If the loading had proceeded as indicated it would at least have greatly reduced the time the vessels were delayed at the loading buoys. It is argued that it was unsafe for vessels to load elsewhere than at the loading buoys, and if they had done so and damage had resulted by reason of a storm the charterers might have been held liable. We are unable to see how such a contention can succeed. The master of each vessel having anchored and given notice that he was ready to receive the cargo, it is not easy to see how the charterers assumed the risk of damage to the vessel by complying with her master's request. The libelants could argue with even greater plausibility that if a storm had arisen and injured the vessels during the time they were improperly delayed, that the charterers were liable for the damage.

The testimony satisfies us that the loading could have proceeded at

Digitized by Google

The Queenswood, for instance, had five anchors and her total anchorage weight was greatly in excess of that at the easterly buoy. We are constrained to believe that the refusal to load was not due to any apprehension of disaster but to the fact that the charterers did not have lighters enough and men enough to load more than two vessels at a time. The charter parties were executed on printed forms prepared by the respondents and each provides that the vessel shall proceed to the Port Inglis anchorage—

"or as near thereunto as she may safely get and there load. * * * The cargo to be brought along side and taken from along side free of risk and expense to the vessel, any custom of the port to the contrary notwithstanding. * * * Steamer or vessel to proceed to safe anchorage at port of loading indicated by the merchant and there load."

If there were nothing but the foregoing provisions to be considered it could not be contended for a moment that there was any obligation on the part of the vessel to anchor at a particular buoy. Her obligation was discharged when she reached a safe anchorage as near Port Inglis as she could safely get. She was then an arrived vessel and was entitled, after due notice, to "there load."

But it is argued that the clause dealing with the time lay days are to begin to run makes it clear that the "safe anchorage" of the preceding provisions is but a synonym for "loading buoy." The language relied on is as follows:

"The cargo to be supplied at the average rate of not less than 400 tons per weather working day * * * commencing 24 hours after vessel is in loading berth and is ready to receive cargo and written notice given to that effect."

We think the term "loading berth" as here used refers back to the safe anchorage previously provided for, to which the vessel was to proceed and where she was to load. The clause is to be construed as if it had provided that the cargo was to be supplied "24 hours after vessel is in safe anchorage, as aforesaid" or in "said anchorage" or "in said loading berth." The position most favorable to the respondents is that the charter is ambiguous and doubtful in this respect. Conceding, for the moment, this to be so, we think the doubt must be resolved against the charterers. They knew all the facts and were familiar with all the conditions and if they intended to require the vessels to reach one of the two buoys before lay days commenced to run they should have made their meaning so plain that the vessel owner could not have been misled. It may be doubted whether any prudent owner would have signed a charter containing such a provision.

It is argued that the libelants were bound by the custom of the port to load in turn at the two buoys. If the proof establishes a uniform custom, and this is not free from doubt, and if the vessel owners were aware of the custom, and this is by no means certain, such a custom would not override the express provisions of the charter party as we interpret it. We do not consider the relations of the respondents to the Port Inglis Terminal Company, the Dunnellon Phosphate Company and the other enterprises being developed at Port Inglis, further than as they show the general knowledge which the respondents had

Digitized by Google

of the entire situation at that point. With such full information as to the capacity of the port for loading and unloading vessels, the respondents sent more vessels there than could be given reasonable dispatch and, in the circumstances, we think the damages due to the delay thus occasioned, should fall upon them rather than upon the vessel owners.

The decrees are affirmed with interest and costs.

(161 Fed. 847.)

THE NO. 4.

THE C. W. MORSE.

(Circuit Court of Appeals, Second Circuit. May 11, 1908.)

Nos. 242, 243.

1. COLLISION—FOG—EXCESSIVE SPEED.

Where two vessels were both under headway at the time of a collision between them in a fog, which occurred despite all efforts to avoid it after they became visible to each other, one or both must have been in fault for excessive speed.

[Ed. Note.—For cases in point, see Cent. Dig. vol. 10, Collision, § 215.

Collision rules, speed of steamers in fog, see note to the Niagara, 28 C. C. A. 532.]

2. SAME—STEAM VESSELS MEETING—MUTUAL FAULTS.

A collision on the Hudson river opposite Thirty-Third street, New York, in a dense fog, between a steamer passing down and a meeting lighter, *held* due to the fault of both vessels; the steamer being in fault for excessive speed, which appeared from the evidence to have been not less than eight knots, and the lighter for inattention in failing to hear the fog signals of the steamer and to take measures accordingly to avoid a collision before the vessels came within sight of each other.

[Ed. Note.—For cases in point, see, Cent. Dig. vol. 10, Collision, §§ 214, 215.

Signals of meeting vessels, see note to The New York, 30 C. C. A. 630.]

3. SAME—INLAND RULES—"NARROW CHANNELS."

"Narrow channels," within the meaning of article 25 of the inland navigation rules (Act June 7, 1897, 30 Stat. 96 [U. S. Comp. St. 1901, p. 2883]), are bodies of water navigated up and down in opposite directions, and do not include harbor waters, with piers on each side, where the necessities of commerce require navigaton in every conceivable direction. Tested by such rule, the Hudson river above Twenty-Third street, New York, and within the city limits is not a narrow channel.

Appeal from the District Court of the United States for the Southern District of New York.

Wallace, Butler & Brown, for the lighter.
Wheeler, Cortis & Haight, for the C. W. Morse.

Before LACOMBE, WARD, and NOYES, Circuit Judges.

WARD, Circuit Judge. April 30, 1907, about 7:30 a. m., the side-wheel steamer C. W. Morse, on a trip from Albany to New York, 432 feet in length, 4,500 tons, with engines of 5,000 horse power, came into collision with lighter No. 4, about 115 feet long and of 457 tons burden. The stem of the Morse penetrated the port side of the

Digitized by Google

lighter at a point about 38 feet from her stem to a distance of 8 feet, and the lighter sank almost at the point of collision, about opposite Thirty-Third street, some 375 feet from the line of the piers on the New York side. The collision occurred in a fog so dense that neither vessel saw the other until they were within a distance estimated by the various witnesses at from 100 to 400 feet. The district judge held that it was a case of inevitable accident, and his decree can be sustained only if no fault be discovered in either vessel.

Two witnesses from the lighter testified that she came down the river from Sixty-Fifth street at full speed in a clear space about 300 feet wide between the new York piers and a fog bank, but that when she reached Twenty-Ninth street the fog rolled up from the south so thick that she turned back to the company's slip at Thirty-Fourth street. On the other hand, many witnesses from the Morse testify that she had been blowing fog signals about every half minute all the way from 129th street down to the place of collision. The lighter also called some witnesses who were in slips and on piers near by, some of whom testified that they plainly saw the Morse as she passed down the river, and some thought they saw the collision distinctly anywhere from 600 to 1,000 feet off. But, this testimony being quite inconsistent with the testimony from either vessel and with the probability of a collision, we give it no weight. On the subject of the fog generally, we adopt the story of the Morse. We do not believe the lighter passed Thirty-Fourth street in clear weather and that she turned back at Twenty-Ninth street for a refuge. She had cargo to be delivered at Thirty-Fourth street, and we think she turned back when near Twenty-Ninth street because she had passed Thirty-Fourth street without knowing it.

We agree with the district judge that both vessels at the time of the collision had a little headway. If the Morse had been motionless, we do not think that the lighter, even if approaching at an angle of 30 degrees, could have pushed sideways with sufficient force to impale herself on the stem of the Morse to a distance of 8 feet. On the other hand, if the lighter had been motionless, the plates in the after part of the wound would not have been turned back as they were, and the stem of the Morse would not have been bent to port. Conceding that inferences from wounds in vessels are more or less conjectural, still the very plain indications on both boats incline us to think that each was in motion when they collided.

The first question on the subject of liability is whether the vessels were proceeding at a moderate speed, as required by article 16 of the inland regulations (Act June 7, 1897, c. 4, 30 Stat. 96 [U. S. Comp. St. 1901, p. 2883]) when they began to navigate with reference to each other. If each vessel had headway on, as we have found, one or both must have been at fault for failing to avoid the other within the space she was visible. This seems to be the definition of moderate speed adopted by the Supreme Court. The Nacoochee, 137 U. S. 330, 339, 11 Sup. Ct. 122, 34 L. Ed. 687; The Umbria, 166 U. S. 404, 417, 17 Sup. Ct. 610, 41 L. Ed. 1053; The Chattahoochee, 173 U. S. 540, 548, 19 Sup. Ct. 491, 43 L. Ed. 801. Therefore the im-

Digitized by Google

portant inquiry, notwithstanding that each had come nearly to a stop at the time of collision, is what were their respective speeds before they began to try to keep clear of each other. Upon this vital question it is to be regretted that the testimony is so insufficient. In the case of the Morse there is no accurate testimony as to the time elapsed between passing any fixed point and the collision. Her witnesses do positively testify that her engines had been for some time working under one bell close shut off, which they say is as slow as they can be worked, except by hand. Although a careful experiment was made, showing that seven turns at full speed astern would bring the Morse to a stop when her engines were so working, no testimony at all was offered showing the speed she would be making under such conditions, which was the material question. The assistant engineer, who was working the engines, said he thought that she made 12 to 14 turns back between the time he got the backing bells and the time of the collision, which, in view of the experiment, would indicate that her engines must have been working at a greater speed than under one bell close shut off. He also testified that with 40 pounds pressure she would make from 10 to 12 turns with her engines so working. The diameter of her wheel being 32 feet, the circumference is 96 feet, and with 10 to 12 turns, making liberal allowance for all usual resistances, she cannot be brought under 8 knots an hour. Less than such a speed in fog has been held immoderate on the open ocean, and is a fortiori so in a crowded harbor. The Pennsylvania, 19 Wall. 125, 22 L. Ed. 148; The Eagle Point, 120 Fed. 449, 56 C. C. A. 599, certiorari denied 189 U. S. 510, 23 Sup. Ct. 850, 47 L. Ed. 923; The Nacoochee, 137 U. S. 330, 11 Sup. Ct. 122, 34 L. Ed. 687.

The engineer of the lighter was drowned, but the master says that she was going under one bell, which would ordinarily be 4 to 4½ miles an hour, but that in his opinion she was not at that time making more than 3 to 3½ miles, which seems to us a moderate speed. We are, however, quite convinced that the Morse had been blowing her fog whistle about once every half minute for some time before the collision, and that those on the lighter going down the river ahead of her, and after turning so as to meet her, should have heard it long before the two vessels had got into close proximity. If they had heard it there is every reason to suppose a collision would have been avoided. Only two persons have testified on the subject of the Morse's whistle from the lighter. The mate admits he heard one blast, while the master, who was with him in the pilot house, heard nothing until the alarm whistle immediately before the collision. It was not until then that the lighter's engines were reversed.

The suggestion is made that the progress of sound in fog is mysterious, and that there may have been areas of sound within which the Morse's whistle, though carrying much further, was inaudible to those on the lighter; but, there being evidence of deficient observation at least in the master, and as the Morse heard the lighter's whistle, and as the lighter was both going down ahead of and afterwards meeting the Morse, we are inclined to attribute the failure to

Digitized by Google

hear the whistle to inattention, rather than to any areas of inaudibility carried with her by the lighter. For similar reasons we think that the lighter had not sounded her own whistle as long as she ought to have done. Those on the Morse heard it twice immediately before the collision, and there is no reason to suppose that, if it had been oftener blown, they would not have heard it sooner.

Enough has been said to dispose of the case; but there are some other charges of negligence which we think is well to consider.

It is contended that the North river at the place of collision is a narrow channel, within article 25 of the inland regulations, and that therefore the Morse was at fault for not going down on the New Jersey side of the river. We have held in the Bee, 138 Fed. 303, 70 C. C. A. 593, that the upper bay, regarded as a whole, is not a narrow channel, but intimated that channels designated by the government might each be considered a narrow channel in respect to vessels moving up and down them; also in The Emma J. Rose, 145 Fed. 13, 76 C. C. A. 43, we have held that the Hudson river between Yonkers and the city line is a narrow channel, while, on the other hand, that between the upper bay and Twenty-Third street it is not a narrow channel. The Islander, 152 Fed. 385, 81 C. C. A. 511. The ratio decidendi of the latter case is that channels within the rule are bodies of water navigated up and down in opposite directions, and that therefore harbor waters with piers on each side, where the necessities of commerce require navigation in every conceivable direction, up and down, across, and up and down between piers on the same side, cannot be considered narrow channels. The only difference between the waters below Twenty-Third street and above it, within the city limits, is that the government has designated by buoys an anchorage ground from the west side to nearly midstream between Twenty-Fifth and Fourty-First streets. This would seem to be an additional reason for not applying the narrow channel rule, since its enforcement would require south-bound vessels to navigate through the anchorage ground, which, though lawful, is, when possible, to be avoided.

The lookout of the Morse was stationed immediately in front of the pilot house, some 65 feet abaft of the stem. As soon as the first signal of the lighter was heard he went forward, but was unable to see her. It was a manifest fault to station a lookout in such a place, but we do not think it contributed to the collision.

Both vessels being held at fault, and both having appealed, the decree of the court below is reversed, without costs, and with instructions to enter a decree for half damages and half costs, with the usual order of reference.

Digitized by Google

(162 Fed. 15.)

SMITH v. UNITED STATES FIDELITY & GUARANTY CO.

(Circuit Court of Appeals, Fourth Circuit. May 22, 1908.)

No. 760.

TRUSTS—CONSTRUCTIVE TRUSTS—RIGHT OF ACTION TO ENFORCE.

Where a surety which agreed to advance money in connection with the purchase of certain mining property by the principal, for which it was bound as surety, and in a certain contingency was to receive a conveyance of such property, to operate the same, account for the proceeds, and, when reimbursed, to reconvey to its principal, by refusing to make agreed payments caused the property to be resold and obtained the title from the court, it took and held the same as a trustee only, and was subject to a suit by the principal for an accounting, and to enforce the trust in accordance with the agreement.

[Ed. Note.—For cases in point, see Cent. Dig. vol. 47, Trusts, § 153.]

Appeal from the Circuit Court of the United States for the Eastern District of Virginia, at Richmond.

A. L. Holladay and William E. Bibb (Bibb & Bibb, on the brief), for appellant.

J. Kemp Bartlett and Jas. R. Caton (H. B. Caton, on the brief), for appellee.

Before PRITCHARD, Circuit Judge, and McDOWELL and DAYTON, District Judges.

DAYTON, District Judge. The appellant, Smith, filed his bill against the appellee company in the circuit court of Louisa county, Va., on December 19, 1904. The cause was by defendant removed to the Circuit Court of the United States for the Eastern District of Virginia, and on April 3, 1905, a demurrer was entered to the bill, which on February, 5, 1907, was sustained, and the bill dismissed, with costs. From this decree the plaintiff, Smith, has taken this appeal.

The allegations of the bill and the exhibits filed therewith embrace 68 pages of the printed record; the bill alone requiring 23 such pages. These allegations are largely a detailed account of the involved transactions had by plaintiff with various parties and corporations touching the mining of pyrites under a tract of 394.22 acres of land in Louisa county, Va. As our duty requires us to review only the action of the court below holding these allegations insufficient in law to constitute a cause of action, we cannot see what good would be accomplished by either setting forth the bill, or attempting to fully epitomize its allegations or charges. We deem it sufficient for our purpose to say that at a judicial sale had of said property on January 23, 1901, the appellant, Smith, became the purchaser of the property at the price of $115,550, paying $5,000 in cash, and executing a bond with appellee, the United States Fidelty & Guaranty Company, as surety, for the balance; that on March 4, 1902, Smith and the fidelity company entered into a contract, setting forth the suretyship of the latter upon said bond, its payment and advancement of certain sums for Smith, and its purpose to advance additional sums to pay debts, including a contingent liability of $35,000 in litigation upon appeal to the Supreme Court of

Digitized by Google

Appeals of Virginia, in consideration whereof it was agreed, among other things:

"(2) In the event that the appeal now before the Supreme Court of Appeals of Virginia shall be decided adversely to said Smith, and the company shall be called upon to pay by order of the court, or in the event that the litigants shall compromise their differences and the company shall in consequence be called upon to pay, the amount of said affirmed decree or the amount as agreed on in said compromise, and shall in fact pay, the said Smith shall, if so requested by said company, contemporaneously with such payment by the company, sign an order of substitution, whereby said company shall be substituted as purchaser of said mining property as originally reported by the commissioner as having been sold to said Smith, so that said company shall, in consequence thereof, be subrogated to whatever rights have accrued to said Smith as purchaser of the property aforesaid."

"(5) That as soon as the company has been reimbursed all moneys that it may have advanced or paid out in any way whatever for or on behalf of said Smith, or for any obligation it may have assumed, directly or indirectly, on account of said Smith, whether growing out of said purchase at commissioners' sale or otherwise, including all interest, expenses, costs, charges, and counsel fees, if any, shall, upon the repayment of the same, reconvey back to said Smith the said property, by good and sufficient deed, so as to revest in him, the said Smith, all the right, title, interest, and estate, originally held by him as purchaser of said property at commissioner's sale, and it shall further deliver over to him any shares of stock in the Pyrites Mining & Chemical Company of Virginia that may have come to it by reason of any of the advances heretofore made by it, or that may be hereafter made by it, including all stock now held by it, or that may hereafter come into its hands by reason of any such advance or advances; the spirit and intent of this agreement being, so far as it relates to the working of the property by the company, that it shall work the same and develop it in its own way, unhampered by said Smith in any way whatever, and that as soon as it has reimbursed itself for all moneys it has paid out or expended on account of its obligation on the purchase-money bond of said Smith to reconvey the property back to him to the same effect as if it had held said property in trust for his express benefit.

"(6) That Jacob S. Rosenthal shall act as attorney for the company in carrying out on its behalf all of the requirements of this contract, on the express condition, however, that the charges for his services, whether legal or otherwise, shall be borne and paid by the said Smith, and not by the company."

The plaintiff's bill, after having set forth this contract, charges in minute detail that the defendant company, in accordance therewith, did take charge of said property, relieved him from all control thereof, refused him access to the premises or to inspection of its books of account, employed an incompetent manager, who negligently and ignorantly destroyed the internal operations of the mines by taking out the supporting pillars, expended large sums of money wantonly and unnecessarily, all of which it charged up against him, but of which it refused him an account, and then deliberately set about to free itself from the trust obligation contained in said contract by failing and refusing to pay the $35,000 decree against plaintiff when it had to be paid, as it had contracted to do; but, on the contrary, it allowed rule for resale of the property to be sued out by the commissioner, and took advantage of his helpless condition in the premises to coerce him into signing a new contract rescinding all others, releasing all claims against the company, agreeing to convey by deed to it his interests therein, which he charges he did, and suffered decree to be entered substituting the company as purchaser instead of himself, and directing

Digitized by Google

the commissioner to convey to it, instead of to him, all of which it is charged was done in order to secure said company to fulfill its original agreement contained in said contract of March 4, 1902, to pay his purchase money in case the litigation touching it should end, as it did, by requiring its payment.

The new contract between Smith and the company, the deed of Smith and wife to it, the decree of the circuit court of Prince William county, and the deed of Caton, its commissioner, substituting the company to the rights of Smith as purchaser, all executed and entered within 10 days of each other, are exhibited with the bill. This new contract, dated May 15, 1903, while it purports to rescind former agreements, to bind Smith to convey all his interest in the property to the company, and to release the company from all demands of his against it, does reserve to him an option to purchase the property on or before July 1, 1904, following, for a sum sufficient to repay expenditures made by the company and interest, and secured to him right to examine the accounts, and that any dispute arising in regard thereto should be settled by arbitration. The company further agreed during the time not to shut down operations and to allow Smith the privilege of exhibiting the property to bona fide prospective purchasers in company with the resident superintendent, not to exceed once each month and upon two days' notice to the company at its office in Baltimore. The bill distinctly charges that Smith did secure a bona fide purchaser for the property in his interest within this period, and over and again sought to exercise the privilege of having such purchaser examine the property, but was in effect buffeted from pillar to post by the company at Baltimore informing him that the property was in condition for inspection and then being refused such inspection by the resident manager, he declaring it not to be in condition to be inspected, and that in this way he lost out in the negotiation.

For the purposes of passing upon the demurrer, all the allegations of this bill must be taken to be absolutely true. From them it would seem clear that when the defendant company executed the contract of March 4, 1902, it lost its position as surety simply. By this contract clearly was established a trust in which it became the trustee. As creditor and surety it had clear right to demand the sale of the property or the intervention of equity by means of a receivership to manage the same so as to pay its debts and liquidate its liability. It did not do this; but, on the contrary, took possession of the property, undertook control of its management and further development, agreeing to furnish further moneys for the purpose and with the express understanding that such control and possession should be confirmed in it by Smith signing a subrogation order whereby it should be substituted to his rights to the property itself as purchaser, but always with the understanding that reconveyance should be made by it when it had worked out its debts, advancements, liabilities, and expenses. A trust could not be more completely established. This trust relation once established, the relation of the parties to each other became entirely changed.

It is not necessary for us to enter into any extended discussion of legal principles governing such relation. They are too well settled to be open to question. In assuming the control and management of this

Digitized by Google

property under this contract with its debtor, this company assumed a legal obligation to carefully and prudently conduct the business with the sole view of making it pay out the debts and with no sinister purpose to destroy it, depreciate its value, or by means of the trust relation acquire such control over either the property or the debtor himself as would enable it to purchase or secure the property at less than its full value. As such trustee the law required it to render also a full, true, and accurate account. No trustee is allowed to purchase the trust property at his own sale, or at any judicial sale thereof, against the interest and to the oppression of his cestui que trust. "Principles are applied almost as stern as those which govern where a sale by a cestui que trust to his trustee is drawn in question. To give validity to such a sale by a mortgagor, it must be shown that the conduct of the mortgagee was in all things fair and frank, and that he paid for the property what it was worth. He must hold out no delusive hopes. He must exercise no undue influence. He must take no advantage of the fears or poverty of the other party. Any indirection or obliquity of conduct is fatal to his title. Every doubt will be resolved against him. 1 Bigelow on Fraud, 347." Villa v. Rodriguez, 12 Wall. 323, 20 L. Ed. 406; Russell v. Southard, 12 How. 139, 13 L. Ed. 927; Morris v. Nixon, 1 How. 118, 11 L. Ed. 69.

Deeds of conveyances absolute on their face under such circumstances have by courts of equity been held mortgages, releases of equities of redemption have been set aside, and purchases under judicial sale held to be only in furtherance, and not destruction, of the original trust. "The rule that, when the relation of trustee and cestui que trust is once established, no subsequent dealing with the trust property by the trustee can relieve it of the trust as between him and his cestui que trust, is too well established to require argument. Van Gilder v. Hoffman, 22 W. Va. 1; Lawrence v. Du Bois, 16 W. Va. 443. Therefore the subsequent sale of the land for the purchase money due from Hull and the repurchase by Ward at such sale did not divest or affect the equitable title of the plaintiff to one-half of the land." Murry v. Sell, 23 W. Va. 475. See, also, Currence v. Ward, 43 W. Va. 367, 27 S. E. 329, and Liskey v. Snyder, 56 W. Va. 610, 49 S. E. 515.

Under these well-settled rules, the decree of Prince William County circuit court, confirming title to the property in the defendant company, could not affect the trust or its liability as trustee, and in this case for the even stronger reason that the very terms of the trust agreement itself bound Smith to consent and agree to have this done.

The other grounds of demurrer have been considered, but are deemed without merit. Viewing this transaction as a trust, the sole parties in interest are Smith and the company. By reason of his absolute conveyance to it of his title, and the payment by it of the purchase money, no other parties to the controversy are either necessary or proper. The controversy is between them alone.

The decree of the court below must be reversed, and the cause remanded, with direction to overrule the demurrer and require the defendant to answer.

Reversed.

Digitized by Google

(162 Fed. 19.)

CHANLER v. SHERMAN.

(Circuit Court of Appeals, Second Circuit. May 11, 1908.)

No. 201.

1. COURTS—FEDERAL COURTS—ARREST—SEIZURE UNDER POLICE POWER WITHOUT WARRANT—POWER OF COURT TO PROTECT LITIGANT.

A federal court has power to protect a litigant therein from seizure of his person by the authorities of a state while in attendance upon the trial of his case, whether upon process or in the exercise of the police power of the state without process, where necessary for the protection of its own jurisdiction, and where the threatened act must rest for its justification upon a proceeding the validity of which is the very matter it is called upon to determine.

2. SAME—PROTECTION OF PARTY FROM ACTION OF STATE AUTHORITIES.

Petitioner was adjudged insane by a justice of the Supreme Court of New York, and committed to an asylum, from which he subsequently escaped and went to Virginia. On his application he was adjudged sane by a court of that state, and thereafter instituted an action for conversion in a federal court in New York against his committee appointed by a court of that state on an adjudication of insanity against him, and who had taken possession of his property in that state. In his complaint he alleged that he was a citizen of Virginia, set up the judgment of its court declaring him sane, and alleged that the judgments and orders of the New York courts were void for want of jurisdiction. *Held* that, on the allegations of his complaint, he had the constitutional right to maintain such action in the federal court, which right that court was bound to protect; that it appearing that his presence in that court was necessary for the trial of the issues joined therein, but that, if found in New York, he was subject under its laws to be apprehended and retaken to the asylum without further court proceedings, the federal court had power to grant him a writ of protection which should entitle him to come to that state, to remain during the trial, and to depart therefrom in the custody and under the protection of the United States marshal and without interference with his personal liberty by the officers or agents of the state.

In Error to the Circuit Court of the United States for the Southern District of New York.

W. D. Reed, for plaintiff in error.

Evarts, Choate & Sherman (J. H. Choate, Jr., and George L. Kobbe, of counsel), for defendant in error.

Before LACOMBE, COXE, and NOYES, Circuit Judges.

NOYES, Circuit Judge. This appeal is from the denial of a petition for an auxiliary order, in the nature of a writ of protection, in an action at law for conversion.

The situation as disclosed by the record in the action and by the affidavits upon the petition may be thus briefly stated:

(1) In 1897 the petitioner—being the plaintiff in said action—was adjudged insane by a justice of the Supreme Court of New York, and ordered committed to the Bloomingdale Asylum, an institution for the custody of the insane, to which he was duly taken and from which he escaped in 1900 and went to Virginia.

(2) In 1899 an order was made by the Supreme Court of New York finding that the petitioner was of unsound mind, and appointing a committee of his person and property, which office is now held by the defendant in said action.

Digitized by Google

(3) In 1901 upon an application made to the county court of Albemarle county, Va., where the petitioner then resided, alleging that he had previously been adjudged insane in New York and praying for an examination as to his then condition, said court found that he was sane and capable of managing his affairs.

(4) In 1904 the petitioner brought this action in the Circuit Court as a citizen of Virginia, averring that he was sane and had so been declared by the Virginia court and that said orders of the Supreme Court of New York and of the justice thereof were void for want of jurisdiction, and demanding damages from the defendant upon the theory that he had converted the property of the petitioner in his hands as committee.

(5) The defendant in his answer, not only relied upon said New York orders, but went further, and alleged that the plaintiff—the petitioner—was and had been in fact insane, and that the judgment of the Virginia Court was collusive and void.

(6) The time for the trial of said action approaching, the plaintiff filed the present petition, stating that his presence as a witness at the trial was imperatively required, but that, in case he returned to New York, he was threatened with reincarceration in the asylum. notwithstanding the Virginia decree. He, therefore, prayed for an order protecting him while coming into the state of New York, attending the trial and returning.

It is apparent from the record that, upon the issues as they stand, the attendance of the petitioner at the trial is necessary. His case cannot be presented without him. And it is also most probable that, if the petitioner return to New York without protection, he will be apprehended and retaken to the asylum as an escaped patient. Without relief he is in this predicament. He must abandon his action for the recovery of a quarter of a million dollars in order to retain his freedom, or must abandon his liberty in order to try his case.

The Constitution of the United States vests in its judicial department jurisdiction over controversies between citizens of different states. The petitioner, as a citizen of the state of Virginia, in bringing his suit in the Circuit Court of the United States, was availing himself of a right founded upon this constitutional provision. And he came into that court with a decree of the court of the state of which he was a citizen declaring his sanity. We cannot disregard that decree. In considering it we do not ignore the orders of the courts of New York. Insanity is not necessarily permanent. For the purposes of this petition —laying aside jurisdictional questions—we may properly consider that the petitioner was insane when so declared in New York, but that he had recovered his sanity when he was declared sane in Virginia.

The question, then, is whether a Circuit Court of the United States has power to protect a person in the situation of the petitioner while attending the trial of his cause therein. It is objected at the outset that the Circuit Court has no power to grant a protective order because it would have the effect of restraining proceedings in a state court. Section 720 of the Revised Statutes (U. S. Comp. St. 1901, p. 581), prohibits the granting of writs of injunction to stay proceedings in any court of a state except when authorized in bankruptcy proceedings. But, assum-

Digitized by Google

ing that the order at present prayed for would have injunctive effect, our attention has been directed to no proceedings pending in a state court which it would stay. It appears that 10 years ago a judge of a state court signed an order committing the petitioner to an asylum, and that the order was complied with. It does not appear that those proceedings are still pending, or that resort to them would be necessary to recommit the petitioner to the asylum. The statutes of New York apparently provide that patients escaping from insane hospitals may be retaken by peace officers and by designated hospital attendants. No proceedings in court seem necessary or to be provided for. The only other proceedings in New York—those in which a committee was appointed—if still regarded as pending would not be stayed by a protective order because it was not the object of those proceedings to commit the petitioner to an asylum. He was already in one when they were instituted.

The next objection is that the petitioner ought to apply to the courts of the state of New York for the rescission of the orders committing him to the asylum and appointing a committee of his person and property. We have not the slightest doubt that full justice would be done the petitioner should he submit himself to the jurisdiction of the state courts. But to assume that he was under any obligation to resort to them is to beg the whole question at issue. To say that the orders in question were valid and must stand until set aside by the tribunals which granted them is to assert that the petitioner has no cause of action in the Circuit Court. But he states a cause of action. He asserts that the orders were wholly void for want of jurisdiction. And, if they were void, they were of no effect, and the petitioner had a right to assert their invalidity in any court.

We now come to the broad question of the power of the Circuit Court to grant a protective writ. Such writs have been issued since early times to protect witnesses and parties coming from one state into another to attend a trial from arrest and detention upon civil process. It is true that, if the petitioner were retaken as an escaped insane patient, it would not be upon civil process, nor would it be upon criminal process. But whatever the form of the process—if any at all were necessary—the power exercised to retake him would be that of the police. With the exercise of the police power of a state a court of the United States should not lightly interfere. But we have no doubt of its right to interfere when necessary for the efficient exercise of its own jurisdiction and where the threatened act under the police power must rest for its justification upon the validity of the very matter which the court is called upon to determine. The petitioner was given the right under the laws of the United States to try his case in the courts of the United States. He is not permitted to exercise that full right and the court in effect is not permitted to exercise its full jurisdiction, if, while attending the trial and perhaps before he can be heard, he may be seized and taken to an asylum—and so seized for the reason that he had been previously committed under an order which the petitioner in the very case was asserting to be wholly void. Under such extraordinary conditions, we think the Circuit Court had power to grant the protective writ.

Digitized by Google

Having determined the question of power, we come to the propriety of exercising it. Notwithstanding the fact that the petitioner is at liberty in other states, it is suggested that it would be unsafe for him to be brought to New York. If any danger were to be apprehended, it would furnish a good reason for refusing the writ. There is, however, nothing in the record to indicate the probability of any such danger, and the petitioner's prayer for relief is based upon the express condition that he remain in the custody of United States marshals during his entire sojourn in the state.

For these reasons, we think a writ of protection should issue if the pleadings in the case remain as they are. The defendant joins issue upon the fact of sanity after the New York orders were made, and also sets up that the Virginia decree was obtained by collusion and is void. With respect to these questions the presence of the petitioner upon the trial would be imperatively required. If, however, the defendant as a committee appointed by the Supreme Court of New York, stood squarely upon the decrees of that court as justifying his acts, and asserted that such decrees, while unreversed, constituted a complete defense regardless of the fact whether the petitioner had since recovered his sanity, the question upon the trial in the Circuit Court would simply relate to the validity of those decrees. That question would be principally a question of law. Practically the only facts involved would be as to the notice given the petitioner—if notice be necessary—and perhaps as to his residence. With respect to these questions the proof would necessarily be within narrow limits and the petitioner's testimony if required might be taken by deposition. Upon such issues we think the personal presence of the petitioner not so necessary that he should be granted the extraordinary relief prayed for here.

The order of the Circuit Court is reversed, with costs to the petitioner, and the matter is remanded to that court with instructions, in case the issues remain as at present, to issue a writ of protection to the petitioner prohibiting any person from apprehending or taking him for the purpose of returning him or committing him to an insane asylum while attending the trial of his said action and for such reasonable time before and after the trial as said court may determine is necessary for him to come into the state and return, provided that he shall submit himself during such time to the custody of one or more United States marshals, shall obey their directions, and shall pay the expense of their employment. But that in case all the issues in said action, except with respect to the validity and effect of the said orders of the Supreme Court of New York and of the justice thereof, be eliminated within 60 days, then that said writ of protection do not issue.

END OF CASES IN VOL. 88.

Digitized by Google

INDEX.

ABATEMENT AND REVIVAL.

§ 1. Another action pending.
It is not ground for abatement of a suit in a federal court that a suit between the defendants, involving some of the same issues, is pending in a state court, where the complainants are not parties to such suit, and the court therein has not assumed custody of property.
—Babcock v. De Mott, 160 Fed. 882.....88 C. C. A. 64

ABUTTING OWNERS.

Compensation for taking of or injury to lands or easements for public use, see Eminent Domain, § 2.
Rights in streets in cities, see Municipal Corporations, § 1.

ACCIDENT.

Cause of death, see Death, § 1.
Cause of personal injuries, see Negligence, § 1.

ACCIDENT INSURANCE.

Accident insurance, see Insurance, § 4.

ACCRUAL.

Of right of action, see Limitation of Actions, § 1.

ACKNOWLEDGMENT.

Operation and effect of admissions as ground of estoppel, see Estoppel, § 1.

ACTION.

Abatement, see Abatement and Revival.
Accrual, see Limitation of Actions, § 1.
Jurisdiction of courts, see Courts.
Limitation by statutes, see Limitation of Actions.
Pendency of action, see Abatement and Revival, § 1.

Actions between parties in particular relations.

See Master and Servant, § 2.

Digitized by Google

Actions by or against particular classes of persons.

See Carriers, § 2; Master and Servant, § 3.
Assignees, see Assignments, § 2.
Stockholders, see Corporations, § 2.
Trustee in bankruptcy, see Bankruptcy, § 2.

Particular causes or grounds of action.

See Collision, § 7; Death, § 1; Insurance, § 5; Libel and Slander, § 1; Money Received; Negligence, § 3; Torts; Trespass; Trover and Conversion, § 1.
Charter hire, see Shipping, § 1.
County warrants, see Counties, § 1.
Infringement of patent, see Patents, § 5.
Infringement of trade-mark or trade-name, see Trade-Marks and Trade-Names, § 3.
Injuries from negligent use of street, see Municipal Corporations, § 1.
Personal injuries, see Master and Servant, § 2; Railroads, § 3; Steam.
Taking of or injury to property in exercise of power of eminent domain, see Eminent Domain, § 2.
Unfair competition in trade, see Trade-Marks and Trade-Names, § 3.

Particular forms of action.

See Replevin; Trespass, § 1; Trover and Conversion.

Particular forms of special relief.

See Creditors' Suit; Injunction; Quieting Title; Specific Performance.
Determination of adverse claims to real property, see Quieting Title.
Enforcement or foreclosure of lien, see Maritime Liens, § 2.
Foreclosure of mortgage, see Railroads, § 1.
Removal of cloud on title, see Quieting Title.
Trial of tax title, see Taxation, § 2.

Particular proceedings in actions.

See Continuance; Damages; Evidence; Judgment; Judicial Sales; Jury; Pleading; Trial.
Assessment of compensation for property taken in condemnation proceedings, see Eminent Domain, § 1.

Particular remedies in or incident to actions.

See Attachment; Injunction; Receivers.
Stay of proceedings, see Appeal and Error, § 4.

Proceedings in exercise of special or limited jurisdictions.

Criminal prosecutions, see Criminal Law.
Suits in admiralty, see Admiralty; Collision, § 7; Maritime Liens, § 2.
Suits in equity, see Equity.

Review of proceedings.

See Appeal and Error; Exceptions, Bill of.

ACTION ON THE CASE.

See Trespass, § 1.

ADEQUATE REMEDY AT LAW.

Effect on jurisdiction of equity, see Creditors' Suit.

Digitized by Google

ADJUDICATION.

Operation and effect of former adjudication, see Judgment, § 2.

ADMINISTRATION.

Of estate of bankrupt, see Bankruptcy, § 2.
Of estate of decedent, see Executors and Administrators.
Of trust property, see Trusts, § 3.

ADMIRALTY.

See Collision; Maritime Liens; Seamen; Shipping; Towage.

§ 1. Jurisdiction.

A corporation of Washington contracted with a dock company to bring 600 Japanese laborers from Honolulu to Seattle on respondent steamship, owned by a steamship company, for which the corporation was to pay a stated sum per head for carriage. A Japanese agent of the dock company in Honolulu advertised for laborers and contracted with libelants and others to transport them to Seattle, collecting from them a part of the passage money agreed upon, and taking their notes for the balance. A representative of the steamship company went to Honolulu and there received from the agent a portion of the passage money, and issued tickets for carriage to Victoria, B. C., the vessel being of Canadian register and not entitled to carry passengers from there to any United States port. Libelants being unable to read the tickets, which were in English, did not know that they were not to be taken to Seattle until after they had gone on board, but on learning such fact left the vessel, and libeled her for breach of the contracts. *Held*, on evidence showing that the arrangement between the dock company and the steamship company was not a charter but a joint enterprise in the profits of which each was to share, and that the Japanese agent who made the contracts also represented the owner of the vessel, that the contracts were maritime and gave a right of action in admiralty against the ship.

—The Stanley Dollar, 160 Fed. 911.....88 C. C. A. 93

§ 2. Pleading, petitions, and motions.

Where a libel in form ad personam was answered, defended, and decided as such, it was not error for the court to refuse to permit respondent to shift his ground of defense after decision so as to claim that an action in rem was the proper remedy.

—The Bencliff, 161 Fed. 909; Samuel v. Horsley Line, Id.....
88 C. C. A. 514

§ 3. Costs.

Where libels against a vessel are similar in character and are consolidated for trial, but one docket fee is taxable for the libelants.

—The Stanley Dollar, 160 Fed. 911.....88 C. C. A. 93

ADVERSE CLAIM.

To real property, see Quieting Title.

ADVERSE POSSESSION.

See Limitation of Actions.

Digitized by Google

AFFREIGHTMENT.

Contracts, see Shipping, §§ 2, 3.

AGENCY.

See Principal and Agent.

AGREEMENT.

See Contracts.

ALIENS.

See Indians.

AMENDMENT.

Of pleading in admiralty, see Admiralty, § 2.

ANIMALS.

Pasturage on forest reserve, see Woods and Forests.

ANSWER.

In pleading, see Pleading, § 1.

APPEAL AND ERROR.

See Exceptions, Bill of.
Review in bankruptcy proceedings, see Bankruptcy, § 4.
Review in criminal prosecutions, see Criminal Law, § 4.

§ 1. **Decisions reviewable.**
No appeal lies from an order of a federal court refusing to dismiss a case for want of jurisdiction; defendant's objection to the jurisdiction being reviewable only after final decree.
—Mann v. Gaddie, 158 Fed. 42.....88 C. C. A. 1

§ 2. **Presentation and reservation in lower court of grounds of review.**
An objection that plaintiff did not have his day in court in that the case should have been submitted to the jury, and even if a verdict were directed, it should not have been on the merits, was not available on a writ of error, where not made in the trial court.
—Reader v. Haggin, 160 Fed. 909.....88 C. C. A. 91

Where a defendant fails to request a directed verdict at the close of the evidence, the refusal of the trial court to enter judgment in his favor notwithstanding an adverse verdict will not be held error by the appellate court.
—Missouri, K. & T. Ry. Co. v. Collier, 157 Fed. 347...88 C. C. A. 127

§ 3. **Effect of transfer of cause or proceedings therefor.**
Where, a decree, enjoining defendant therein from diverting water from a river so that it should flow on complainant's land, by clerical error

Digitized by Google

failed to describe the land, the court, after the term and after an appeal had been taken, had power to correct the mistake, and, having done so pursuant to a stipulation of the parties, had no power thereafter to vacate the corrected order.
—New Liverpool Salt Co. v. Wellborn, 160 Fed. 923..88 C. C. A. 105

§ 4. **Supersedeas or stay of proceedings.**
Act March 3, 1891, c. 517, 26 Stat. 828 [1 U. S. Comp. St. 1901, p. 550], allowing appeals from interlocutory orders appointing receivers, and providing that the proceedings in other respects shall be stayed unless otherwise ordered by the court, or by the appellate court or a justice thereof, is sufficient to afford the defendant relief in a case where receivers are improperly appointed, whether with or without notice.
—Mann v. Gaddie, 158 Fed. 42.....88 C. C. A. 1

§ 5. **Record and proceedings not in record.**
The inquiry of the Circuit Court of Appeals on writ of error must be confined to the pleadings and proof as embodied in a bill of exceptions, and, where the record so made up is free from error, the judgment must be affirmed.
—Reader v. Haggin, 160 Fed. 909.....88 C. C. A. 91

To authorize the reversal of a judgment error must clearly appear, and, where, on the trial of an action by a servant against the master to recover for a personal injury, the plaintiff as a witness was permitted to "indicate" his position at the time of the injury by signs and gestures which do not appear in the record, but which may have been important or even vital upon the issue of contributory negligence, the action of the trial court in directing a verdict for the defendant cannot be reviewed.
—Christy v. Schwarzchild & Sulzberger Co., 160 Fed. 657.....
88 C. C. A. 125

Whenever a litigant proposes to ask an appellate court to review the testimony and to determine whether there was any evidence to warrant a recovery or to support a particular defense, he should cause a statement to be inserted in the bill of exceptions showing affirmatively that it contains all the testimony that was heard or produced at the trial. In the absence of such a showing, an appellate court must presume, in aid of the verdict, that there was testimony to support it, and that it would so appear if all the evidence had been incorporated into the record.
—Elliott v. Canadian Pacific Ry. Co., 161 Fed. 250....88 C. C. A. 286

A record on appeal is defective where it fails to give the filing date of several orders contained in it.
—In re Friedman, 161 Fed. 260.....88 C. C. A. 306

§ 6. **Assignment of errors.**
The practice of filing interminable assignments of error tends to defeat the purpose of the rule requiring such assignments, and is not to be approved.
—Chicago Great Western Ry. Co. v. McDonough, 161 Fed. 657.....
88 C. C. A. 517

§ 7. **Review.**
The decision of a chancellor on an issue of fact is presumptively correct, and will not be disturbed by an appellate court except for a clear and palpable mistake.
—Babcock v. De Mott, 160 Fed. 882.....88 C. C. A. 64

A motion that an exception be inserted in a bill of exceptions, where no exception was in fact taken, is addressed to the discretion of the trial judge, and his denial of the motion cannot be reviewed on a writ of error.
—Reader v. Haggin, 160 Fed. 909.....88 C. C. A. 91

The denial of a motion for a new trial presents no question which can be considered by the Circuit Court of Appeals.
—Reader v. Haggin, 160 Fed. 909.....88 C. C. A. 91

Digitized by Google

Where matter constituting no defense to the bill was excepted to, and the court overruled the exceptions, but announced that the matter pleaded would be wholly disregarded on final hearing, and that any expense added to the proceedings by reason thereof would be taxed to the defendants, the appellants were not prejudiced thereby.

—Feidler v. Bartleson, 161 Fed. 30.....88 C. C. A. 194

Where, after the admission of certain objectionable testimony before an examiner, the competency of similar testimony was submitted to the court who ruled that it was incompetent, and no further testimony of that nature was received, it would be presumed on appeal that the testimony already introduced was disregarded by the court, and therefore constituted no ground for reversal.

—Feidler v. Bartleson, 161 Fed. 30.....88 C. C. A. 194

There is this exception to the rule: Where the evidence thus admitted is so impressive that in the opinion of the appellate court its effect is not removed from the minds of the jury by its subsequent withdrawal, or by an instruction of the court to disregard it, the judgment will be reversed on account of its admission, and a new trial will be granted.

—Armour & Co. v. Kollmeyer, 161 Fed. 78.....88 C. C. A. 242

The general rule is that, if inadmissible evidence has been received during a trial, the error of its admission is cured by its subsequent withdrawal before the trial closes and by an instruction to the jury to disregard it.

—Armour & Co. v. Kollmeyer, 161 Fed. 78.....88 C. C. A. 242

Where, in a cause otherwise triable by jury, the parties agree upon a statement of the ultimate facts, and not the evidence of them, and the case is then submitted to the court without a jury for its decision of the questions of law arising upon the facts so stated, the judgment may be reviewed upon a writ of error; and this, because there the facts are not determined upon a trial by the court, but by the agreed statement, which is spread at large upon the record, as a part of it, as would be a special verdict.

—United States v. Cleage, 161 Fed. 85.....88 C. C. A. 249

The fact that it appears from the record of a trial wherein evidence was erroneously rejected that such evidence would have been futile does not show that its rejection was not prejudicial, because the proposer might have introduced other evidence or have otherwise changed his course at the trial if his rejected evidence had been received, and the court had ruled accordingly.

—Mutual Reserve Life Ins. Co. v. Heidel, 161 Fed. 535.....
88 C. C. A. 477

Right rulings at the trial are essential to a trial according to the course of the common law. Errors are presumed to be prejudicial. It is only when it appears beyond doubt that they are not so that they may be disregarded.

—Mutual Reserve Life Ins. Co. v. Heidel, 161 Fed. 535.....
88 C. C. A. 477

Whether or not a witness tendered as an expert possesses the requisite qualifications rests largely in the discretion of the trial court, and its decision thereon ought not to be disturbed unless it can be said that it was clearly erroneous.

—Chicago Great Western Ry. Co. v. McDonough, 161 Fed. 657.....
88 C. C. A. 517

§ 8. Determination and disposition of cause.

On appeal from an order appointing a receiver, the appellate court will render a final decree dismissing the bill if it appears that there is no equity therein, or that the court has no jurisdiction.

—Mann v. Gaddie, 158 Fed. 42.....88 C. C. A. 1

Where a cause has been properly tried on the merits in a Circuit Court and a judgment rendered for plaintiff, on a reversal because of the fail-

Digitized by Google

ure of the declaration to allege the requisite diversity of citizenship between the parties to give the court jurisdiction, it is competent for the appellate court to remand with leave to permit an amendment, and to try the question of jurisdiction alone, if issue is taken thereon according to the practice with respect to pleas in abatement.
—Grand Trunk Western Ry. Co. v. Reddick, 160 Fed. 898..... 88 C. C. A. 80

The only remedy for prejudicial error in a trial at law in a national court is a new trial. The appellate court cannot re-examine the facts and render the judgment it deems right.
—Mutual Reserve Life Ins. Co. v. Heidel, 161 Fed. 535..... 88 C. C. A. 477

If an appeal is taken from a decree on the merits, it will not be reversed on a question of costs.
—Conrad Inv. Co. v. United States, 161 Fed. 829.....88 C. C. A. 647

APPLIANCES.

Liability of employer for defects, see Master and Servant, § 2.

APPOINTMENT.

Of executor or administrator, see Executors and Administrators, § 1.
Of receiver, see Receivers, § 1.
Of receiver for railroad, see Railroads, § 2.

APPROPRIATION.

Of water rights in general, see Waters and Water Courses, § 2.
Of water rights in public lands, see Waters and Water Courses, § 1.

ASSESSMENT.

Of compensation for property taken for public use, see Eminent Domain, § 1.
Of loss on insured, see Insurance, § 1.

ASSIGNMENT OF ERRORS.

See Appeal and Error, § 6.

ASSIGNMENTS.

Fraud as to creditors, see Fraudulent Conveyances.
In bankruptcy, see Bankruptcy, § 2.
Of patents, see Patents, § 4.

§ 1. Requisites and validity.
A contract by which defendant lumber company sold to K. & Co. its entire cut of white pine lumber for 1901, except so much as it should need for its retail trade in a certain city, agreeing to retain only an average grade for the same, payment to be made within 10 days from date of invoice, and K. & Co. to take some lumber shorter than 12 feet and some longer than 16 feet, involved matters of personal confidence between de-

Digitized by Google

fendant and K. & Co., and therefore was not assignable, under the rule that a contract personal in its nature cannot be assigned by one party without the consent of the other.

—Demarest v. Dunton Lumber Co., 161 Fed. 264.....88 C. C. A. 310

§ 2. **Actions.**

An assignment of claims to complainant for collection may be lawfully made under the statutes of Washington.

—Feidler v. Bartleson, 161 Fed. 30.....88 C. C. A. 194

Evidence *held* insufficient to establish the ratification by the seller of an assignment of a contract for the sale of lumber.

—Demarest v. Dunton Lumber Co., 161 Fed. 264.....88 C. C. A. 310

ASSIGNMENTS FOR BENEFIT OF CREDITORS.

See Bankruptcy, § 2.

ASSUMPSIT, ACTION OF.

See Money Received.

ASSUMPTION.

Of risk by employé, see Master and Servant, § 2.

ATTACHMENT.

Priorities between attachment lien and mortgage, see Mortgages, § 1.

§ 1. **Quashing, vacating, dissolution, or abandonment.**

Rev. St. Mo. 1899, § 413 (Ann. St. 1906, p. 501), provides that attachments may be dissolved on motion on defendant's behalf at any time before final judgment when defendant appears and pleads to the action and gives bond conditioned that the property, effects, and credits shall be forthcoming and abide the judgment rendered, or when the defendant shall appear and plead and give a bond conditioned that defendant will pay to plaintiff the amount which may be adjudged in plaintiff's favor on or before the first day of the next term after judgment; and section 414 declares that when any attachment shall be dissolved all proceedings touching the property and effects attached, and the garnishee summoned, shall be vacated, and the suit shall proceed as if commenced by summons only. *Held* that, where an attachment was dissolved on the giving of a forthcoming bond, defendant could not thereafter join issue on and demand a trial of the grounds originally alleged for the attachment; and this, though plaintiff took leave to amend his grounds of attachment after the attachment had been dissolved.

—Blount v. American Lead & Baryta Co., 161 Fed. 714.....88 C. C. A. 574

ATTORNEY AND CLIENT.

Appointment of attorney of creditor as attorney for receiver in bankruptcy, see Bankruptcy, § 1.

Attorneys in fact, see Principal and Agent.

AUTHORITY.

Of agent, see Principal and Agent, § 1.

Digitized by Google

BANKRUPTCY.

Cross-examination of witness on prosecution for offense against bankruptcy law, see Witnesses, § 3.

§ 1. Petition, adjudication, warrant, and custody of property.

Where a debtor is declared a bankrupt at the instance of a creditor, and a receiver is appointed, the attorney for such petitioning creditor should not be employed as attorney for the receiver.

—In re Strobel, 160 Fed. 916.....88 C. C. A. 98

Bankr. Act July 1, 1898, c. 541, § 5a, 30 Stat. 547 [U. S. Comp. St. 1901, p. 3424], declares that a partnership during the continuance of the firm business or after its dissolution and before final settlement may be adjudged a bankrupt, and section 5c provides that the bankruptcy court which has jurisdiction of one of the partners may have jurisdiction of all of the partners and of the administration of the partnership and individual property. *Held* that, where a partnership was insolvent at the date of its dissolution, and thereafter an execution was levied on the firm's property for a partnership debt, the duty devolved on the retiring partner to discharge such levy, as well as on any other members of the firm, and a failure so to do constituted an act of bankruptcy, justifying an adjudication against the firm, and also against its members, including such retiring partner.

—Holmes v. Baker & Hamilton, 160 Fed. 922.....88 C. C. A. 104

§ 2. Assignment, administration, and distribution of bankrupt's estate.

Where a sheriff took possession of certain personal property under a replevin writ, in an action pending in a state court prior to the filing of a bankruptcy petition against the defendant, plaintiff in such replevin suit claiming title on the ground that the property was purchased by means of the bankrupt's fraudulent representations, the bankruptcy court had no jurisdiction by a summary order to compel the sheriff to deliver the property to a receiver in bankruptcy, under Bankr. Act July 1, 1898, c. 541, § 67f, 30 Stat. 565 [U. S. Comp. St. 1901, p. 3450], invalidating levies, judgments, attachments, and liens obtained within four months against a person who is insolvent, and providing that the property so affected shall pass to the trustee, as such section only applies to property of the bankrupt.

—In re L. Rudnick & Co., 160 Fed. 903.....88 C. C. A. 85

The District Court had jurisdiction in a bankruptcy proceeding to make a summary order directing third persons to pay over to the temporary receiver sums of money which they claimed they did not have or which they claimed were their own property.

—In re Friedman, 161 Fed. 260.....88 C. C. A. 306

Persons summarily ordered in a bankruptcy proceeding to turn money over to the temporary receiver as belonging to the bankrupt may not complain that they were given no opportunity to call witnesses in their own behalf or cross-examine those testifying against them, where they presented their own affidavits and might have presented as many other affidavits as they pleased, where the testimony against them was in part their own; giving them as full opportunity to explain it under oath as if their own counsel were cross-examining them orally; where they made no request to cross-examine other witnesses against them nor that they be examined or cross-examined; and where, after being advised by the order to show cause of the claim made against them, they had every opportunity to make their own presentation of the facts, and to make any objection to the testimony referred to in such order to show cause.

—In re Friedman, 161 Fed. 260.....88 C. C. A. 306

Digitized by Google

On a corporation becoming a bankrupt its trustee acquires no higher rights to recover stock liabilities from stockholders than the bankrupt had.

—Sternberg v. Duryea Power Co., 161 Fed. 540.....88 C. C. A. 482

Within a year after an adjudication in bankruptcy a creditor filed a paper, denominated an "application for sale of collateral," with the referee. Such paper was signed and sworn to, and set out certain notes given by the bankrupt to the creditor, alleged that they were due and unpaid, and also described certain securities given as collateral to such notes, and asked an order for their sale, which was granted. An order was subsequently made confirming the sale and applying the proceeds upon the notes. *Held* that, as such paper contained all the statements essential to a proof of claim, it was amendable after the expiration of the year for filing claims, when the amount due on the claims was ascertained by the sale of the collateral, and that, as so amended, the creditor was entitled to have it considered as his proof of claim for the balance due him.

—In re Faulkner, 161 Fed. 900.....88 C. C. A. 505

Where property of a bankrupt, a part of which was subject to a landlord's lien and a part not, was sold together in gross without objection, the proceeds cannot be apportioned, so as to entitle the landlord to priority of payment from any part thereof.

—Vollmer v. McFadgen, 161 Fed. 914.....88 C. C. A. 605

Evidence *held* to establish that $40,000 secreted in a bank by a bankrupt, within eight months after the adjudication in bankruptcy, belonged to him before the adjudication, and passed to his trustee in bankruptcy by virtue thereof; but otherwise as to money and jewelry found on his person at the time of his death, a year and a half after the adjudication, to which the trustee acquired no title.

—Clay v. Waters, 161 Fed. 815; Boatwright v. Same, Id.....
88 C. C. A. 633

Where, after the death of a bankrupt, who had concealed a large sum of money on deposit to the credit of fictitious persons in a Canadian bank, his confidential attorney went with the bankrupt's mother and widow and represented to the bank that they were the identical persons in whose names the money was deposited, and through his influence procured the payment of such deposit to them, after which such attorney's bank account assumed an importance and magnitude unknown before, which was not explained, and he thereupon immediately invested funds in real estate security and notes to the amount of $6,975, he was properly charged to that extent as a trustee thereof, and was properly required to transfer the same to the bankrupt's trustee.

—Clay v. Waters, 161 Fed. 815; Boatwright v. Same, Id.....
88 C. C. A. 633

The title to money or property belonging to a bankrupt before adjudication vests in the trustee, subsequently appointed, under the express provisions of Bankr. Act July 1, 1898, c. 541, § 70, 30 Stat. 565 (U. S. Comp. St. 1901, p. 3451); but the trustee acquires no title to money or property in the hands of third persons which did not belong to the bankrupt prior to the adjudication.

—Clay v. Waters, 161 Fed. 815; Boatwright v. Same, Id.....
88 C. C. A. 633

Under Rev. St. § 3477 (U. S. Comp. St. 1901, p. 2320), providing that assignments of claims upon the United States shall be void unless witnessed and acknowledged and made after the claim has been allowed and a warrant drawn therefor, the assignment by a bankrupt to a bank, as collateral security for money borrowed, of claims against the United States under contracts only partially performed, such assignments not being witnessed or acknowledged, was ineffective, and the claims passed by

Digitized by Google

operation of law to the bankrupt's trustee for the benefit of general creditors.
—National Bank of Commerce of Seattle v. Downie, 161 Fed. 839.... 88 C. C. A. 657

§ 3. **Rights, remedies, and discharge of bankrupt.**
A bankrupt is not guilty of making a false oath because he omits from his sworn schedule securities which are worthless.
—In re McCrea, 161 Fed. 246.....88 C. C. A. 282

The fact alone that a bankrupt failed to schedule an interest in the estate of his deceased father is not necessarily attributable to a fraudulent intent, so as to justify the refusal of a discharge on the ground of his making a false oath in verifying his schedules, when by the will of his father the property was left in trust; and the question whether or not the bankrupt had an interest therein which was transferable was involved, and he, moreover, claimed to have transferred all of his interest in the estate to his wife while solvent.
—In re McCrea, 161 Fed. 246.....88 C. C. A. 282

When a bankrupt was an employé and not engaged in any business of his own, his failure to keep books showing his financial condition does not indicate a fraudulent intent which justifies the refusal of his discharge.
—In re McCrea, 161 Fed. 246.....88 C. C. A. 282

Whether a judgment against one who is thereafter adjudged bankrupt is thereby discharged is properly raised by pleading the discharge in a proceeding to enforce the judgment, and not by petition in the bankruptcy court to enjoin the judgment creditor from enforcing it.
—Hellman v. Goldstone, 161 Fed. 913.....88 C. C. A. 604

§ 4. **Appeal and revision of proceedings.**
A stipulation that two petitions to review orders in bankruptcy, with certified copies transmitted by the clerk of the District Court should be printed in one appeal book, was not sufficient to constitute a waiver of any legal objection to the petitions.
—In re Strobel, 160 Fed. 916.....88 C. C. A. 98

A receiver in bankruptcy having turned over to the petitioning creditor certain of the bankrupt's property on the creditor's claim that the bankrupt was a bailee thereof only, a special commissioner recommended that the receiver's action be not approved which recommendation was affirmed by an order of the District Court. Another order was thereafter made referring to the same commissioner the duty to ascertain the value of the property and the sum the creditor should pay to the bankrupt's trustee, and, on the commissioner's finding being filed, an order was entered confirming his report and directing payment to the trustee or clerk of the court. *Held*, that a petition to review such orders could be sustained unless taken within 10 days after the entry of the order, under Circuit Court of Appeals rule 38, providing that a petition for review shall be filed within 10 days after the entry of the order, unless by an order filed within such 10 days the District Court enlarges the time.
—In re Strobel, 160 Fed. 916.....88 C. C. A. 98

A receiver in bankruptcy having turned over to the petitioning creditor certain of the bankrupt's property on the creditor's claim that the bankrupt was a bailee thereof only, a special commissioner recommended that the receiver's action be not approved, which recommendation was affirmed by an order of the district court. Another order was thereafter made, referring to the same commissioner the duty to ascertain the value of the property, and the sum the creditor should pay to the bankrupt's trustee, and. on the commissioner's finding being filed, an order was entered confirming his report and directing payment to the trustee or clerk of the court. *Held*, that none of such orders were appealable or reviewable otherwise than by a petition for review, as authorized by Bankr. Act July 1, 1898, c. 541, § 24b, 30 Stat. 553 (U. S. Comp. St. 1901, p. 3432).
—In re Strobel, 160 Fed. 916.....88 C. C. A. 98

Digitized by Google

On petition to review an order directing petitioners to pay money to a temporary receiver in bankruptcy, they may not complain for the first time that a copy of the testimony taken under Bankr. Act July 1, 1898, c. 541, § 21a, 30 Stat. 552 (U. S. Comp. St. 1901, p. 3430), providing for the examination of persons respecting acts of a bankrupt, was not served with the order to show cause why the order directing the payment should not be made. The objection should have been made at or before the argument in the District Court.
—In re Friedman, 161 Fed. 260.....88 C. C. A. 306

§ 5. **Offenses against bankrupt laws.**
On the trial of a bankrupt who was a dealer in jewelry, charged in the indictment with having concealed from his trustee certain jewelry, it was not under the circumstances error to admit evidence of the amount and value of defendant's stock in trade a few days prior to the filing of the petition in bankruptcy, and also a short time afterward, where the jury were properly instructed and cautioned in reference to such testimony.
—Jacobs v. United States, 161 Fed. 694.....88 C. C. A. 554

On such trial proofs of claims filed against the defendant's estate in bankruptcy not shown to have been examined or approved by him were not admissible as admissions as to the amount of property he had purchased prior to his bankruptcy, and to be accounted for.
—Jacobs v. United States, 161 Fed. 694.....88 C. C. A. 554

BENEFITS.

Acceptance as grounds of estoppel, see Estoppel, § 1.

BIAS.

Of juror, see Jury, § 1.

BILL OF EXCEPTIONS.

See Exceptions, Bill of.

BILL OF LADING.

See Shipping, § 2.

BONDS.

Replevin bonds, see Replevin, § 2.

BREACH.

Of condition, see Insurance, § 2.
Of contract, see Contracts, § 3.

BROKERS.

See Principal and Agent.

§ 1. **Compensation and lien.**
Where brokers employed to sell bonds procured a purchaser who was ready and willing to take the bonds and disclosed his name to their

Digitized by Google

principal, the latter cannot deprive them of their right to commissions by revoking their authority and itself making the sale to such purchaser.
—Canadian Imp. Co. v. Cooper, 161 Fed. 279.....88 C. C. A. 325

A broker employed to sell property at a fixed price is not deprived of his right to commissions because the purchaser was procured through the agency of another employed by him.
—Canadian Imp. Co. v. Cooper, 161 Fed. 279.....88 C. C. A. 325

CANCELLATION OF INSTRUMENTS.

See. Quieting Title.

CAPITAL.

Of corporations in general, see Corporations, § 1.

CARGO.

See Shipping.

CARRIERS.

Carriage of goods by vessels, see Shipping, § 2.

§ 1. Control and regulation of common carriers.

An action in a federal court for a mandamus, under Act March 2, 1889, c. 382, § 10, 25 Stat. 862 [U. S. Comp. St. 1901, p. 3172], amendatory of the interstate commerce act, which authorizes such action by a shipper against an interstate carrier to compel a compliance with the act, and further provides that "the remedy hereby given by writ of mandamus shall be cumulative, and shall not be held to exclude or interfere with other remedies provided by this act or the act to which it is a supplement," does not preclude the relator or others from proceeding in respect to the same matter by petition to the Interstate Commerce Commission under section 13 of the original act of Feb. 4, 1887, c. 104, 24 Stat. 383 [U. S. Comp. St. 1901, p. 3164], and the court in the mandamus suit is without power on an ancillary bill to enjoin such proceeding.
—Merchants' Coal Co. v. Fairmont Coal Co., 160 Fed. 769.....
88 C. C. A. 23

§ 2. Carriage of passengers.

Libelants were not entitled to recover damages for loss of time after breach of the contracts and while waiting for the trial of the case.
—The Stanley Dollar, 160 Fed. 911.....88 C. C. A. 93

CHALLENGE.

To juror, see Jury, § 1.

CHANCERY.

See Equity.

CHARGE.

To jury in civil actions, see Trial, § 3.

CHARTER PARTIES.

See Shipping, §§ 1, 3.

Digitized by Google

CHOSE IN ACTION.

Assignment, see Assignments.

CIRCUIT COURTS OF APPEALS.

See Courts, § 2.

CITIES.

See Municipal Corporations.

CITIZENS.

See Indians.
Citizenship ground of jurisdiction of United States courts, see Courts, § 2.

CLAIM AND DELIVERY.

See Replevin.

CLAIMS.

Against estate of bankrupt, see Bankruptcy, § 2.
Mining claims, see Mines and Minerals, § 1
Of patent, see Patents, § 3.

CLOUD ON TITLE.

See Quieting Title.

COLLECTION.

Of duties, see Customs Duties, § 3.

COLLISION.

Insurance against injury by, see Insurance, § 4.

§ 1. Steam vessels meeting or crossing.

A steamship navigating San Francisco Bay on a bright moonlight night after exchanging crossing signals of one whistle with a tug with a tow approaching her course ahead from her port side, being the privileged vessel under article 19 of the Inland Navigation Rules, 30 Stat. 101 (U. S. Comp. St. 1901, p. 2883), was required by article 21 to keep her course and speed, and where she continued porting her helm, and although her master was watching the tug and knew that it did not port in compliance with the signal, and was uncertain as to its intended course, failed to slow down and signal such fact as required by rule 3 of the pilot rules, she is chargeable with contributory fault for a collision with the tow, although the initial fault was that of the tug.

—The Robert Dollar, 160 Fed. 876; The Tiger, Id....88 C. C. A. 58

The tug Beard, passing eastward through the channel between Shooter's Island and Staten Island with a dredge in tow on a hawser, and the tug Winnie, passing westward with two canal boats on her port and one on her starboard side, both *held* in fault for a collision between their tows;

Digitized by Google

the Beard for failing to keep near the right-hand side of the channel, which is 600 feet wide, and the Winnie for inattention to a meeting schooner and for failure to give the bend signal required by rule 5 of the inland navigation rules (30 Stat. 100, c. 4 [U. S. Comp. St. 1901, p. 2882]).
—The Winnie, 161 Fed. 101; The Edith Beard, Id....88 C. C. A. 265

A finding of the trial court that a collision between the steamships Tremont and Ramona off Marrowstone Point near Port Townsend was due to faults of both vessels affirmed.
—The Tremont, 161 Fed. 1.....88 C. C. A. 304

§ 2. **Steam vessels and sail vessels.**
The sinking of a schooner pilot boat at sea in the night by being run down by a steamer on board which she had agreed by signal to put a pilot *held* due to the fault of both vessels, neither of which was properly attentive to the movements of the other.
—The Monterey, 161 Fed. 95.....88 C. C. A. 259

§ 3. **Vessels in tow.**
A heavily laden schooner being towed down the Delaware river at night on a hawser 80 fathoms long came into collision with a dredge engaged in dredging the new channel, and anchored between that and the old channel. The dredge was properly lighted, indicating that vessels should pass to the eastward through the old channel. There was a direct conflict of evidence as to whether the tug or tow was in fault; the tug claiming that she kept a course directly toward the dredge until within a mile, and then sheered to the eastward, and the schooner, failing to follow, gave her three several signals with her whistle, each time taking a course more to the eastward, until she was headed directly toward the New Jersey shore. The schooner claimed that the tug was on a course to the westward of the dredge until the schooner was within 700 or 800 feet, when she sheered directly across the channel and signaled, and that the schooner at once starboarded her wheel, but was unable to turn in the short distance. *Held* that, taking into consideration that the schooner was fully manned by experienced and competent seamen all of whom were fresh at the time, with a lookout, and that the navigation of the tug was, or at least had been up to immediately before the collision, in charge of an unlicensed deck hand, and that she had no lookout, the story of the schooner was the more probable, and, as it was corroborated to some extent by the watchman on the dredge, the tug would be held solely in fault.
—The Henry O. Barrett, 161 Fed. 481; The James McCaulley, Id... 88 C. C. A. 423

§ 4. **Fog or thick weather.**
The owner of a tug which parted from its tow of coal boats on the Ohio river at night in a fog *held* not chargeable with negligence which rendered it liable for injuries done by the boats by drifting against other craft moored in the river merely because the tug was sent out with the tow from Pittsburg, 12 miles distant, at night, at a time when there was no fog.
—Bray v. Monongahela River Consol. Coal & Coke Co., 161 Fed. 277 .....88 C. C. A. 323

Where two vessels were both under headway at the time of a collision between them in a fog, which occurred despite all efforts to avoid it after they became visible to each other, one or both must have been in fault for excessive speed.
—The No. 4, 161 Fed. 847; The C. W. Morse, Id.....88 C. C. A. 665

A collision on the Hudson river opposite Thirty-Third street, New York, in a dense fog, between a steamer passing down and a meeting lighter, *held* due to the fault of both vessels; the steamer being in fault for excessive speed, which appeared from the evidence to have been not less than eight knots, and the lighter for inattention in failing to hear

Digitized by Google

the fog signals of the steamer and to take measures accordingly to avoid a collision before the vessels came within sight of each other.
—The No. 4, 161 Fed. 847; The C. W. Morse, Id.....88 C. C. A. 665

§ 5. **Narrow channels, harbors, rivers, and canals.**
"Narrow channels," within the meaning of article 25 of the inland navigation rules (Act June 7, 1897, 30 Stat. 96 [U. S. Comp. St. 1901, p. 2883]), are bodies of water navigated up and down in opposite directions, and do not include harbor waters, with piers on each side, where the necessities of commerce require navigaton in every conceivable direction. Tested by such rule, the Hudson river above Twenty-Third street, New York, and within the city limits is not a narrow channel.
—The No. 4, 161 Fed. 847; The C. W. Morse, Id.....88 C. C. A. 665

§ 6. **Special circumstances and errors in extremis.**
A steamer and a pilot boat which have agreed to come to a standstill, so that the pilot boat's yawl may bring a pilot to the steamer, are not navigating on independent courses, and the statute creates no presumption that one is the privileged and one is the burdened vessel, and defines no course of navigation to be followed by either. It is a case of special circumstances in which the vessels are co-operating in an agreed maneuver, and each is bound to act prudently toward the agreed end.
—The Monterey, 161 Fed. 95.....88 C. C. A. 259

§ 7. **Suits for damages.**
The expenses of a vessel during the time she was delayed in repairing injuries caused by a collision, such as wages of the crew, provisions, and the like are properly allowable as damages resulting from the collision, but insurance premiums and general office and agents' expenses during that time are not proper elements of such damages. The fixing of the per diem demurrage during such time on the basis of the vessels average daily earnings during three consecutive voyages *held* not prejudicial to such vessel.
—The Tremont, 161 Fed. 1.....88 C. C. A. 304

In finding the damages recoverable by a vessel injured in a collision as she was starting on a voyage an allowance cannot be made for loss of earnings in carrying the mails on the voyage, which were withdrawn on account of the delay caused by her injuries, and sent by another vessel where there is no evidence from which it can be ascertained with reasonable certainty what profit she would have made from such carriage.
—The Tremont, 161 Fed. 1.....88 C. C. A. 304

Where there is a conflict of testimony as to whether one or the other of two vessels brought about a collision by negligent navigation, it is proper to consider the manner in which each was manned at the time.
—The Henry O. Barrett, 161 Fed. 481; The James McCaulley, Id...
88 C. C. A. 423

COMBINATIONS.

See Conspiracy.

COMITY.

Between courts, see Courts, § 3.

COMMERCE.

Carriage of goods and passengers, see Carriers; Shipping.

COMMISSIONERS.

In equity, see Equity, § 5.
Of Indian affairs, see Indians.

Digitized by Google

COMMISSIONS.

Of broker, see Brokers, § 1.

COMMON CARRIERS.

See Carriers.

COMPENSATION.

Of broker, see Brokers, § 1.

COMPETENCY.

Of jurors, see Jury, § 1.
Of witnesses in general, see Witnesses, § 1.

COMPETITION.

Unfair competition, see Trade-Marks and Trade-Names, § 3.

COMPLAINT.

In criminal prosecutions, see Indictment and Information.

COMPUTATION.

Of period of limitation, see Limitation of Actions, § 1.

CONCLUSION.

Of witness, see Evidence, § 2.

CONCURRENT JURISDICTION.

Of courts, see Courts § 3.

CONDEMNATION.

Taking property for public use, see Eminent Domain.

CONDITIONS.

In contracts and conveyances.

Insurance policies, see Insurance, § 2.

Precedent to actions or other proceedings.

See Quieting Title, § 1.
For wrongful death, see Death, § 1.
To enforce trust, see Trusts, § 4.

Digitized by Google

CONFIDENTIAL RELATIONS.

Disclosure of communications, see Witnesses, § 1.

CONFIRMATION.

Of tax sale, see Taxation, § 1.
Of tax title, see Taxation, § 2.

CONFLICT OF LAWS.

Conflicting jurisdiction of courts, see Courts, § 3.

CONSIDERATION.

Of contract in general, see Contracts, § 1.

CONSPIRACY.

§ 1. **Criminal responsibility.**
Where an indictment for conspiracy to induce certain persons to commit perjury in the making of public land entries alleged that the acts were knowingly done, and that defendants knew that the entrymen were applying to purchase the lands on speculation, and not in good faith, to appropriate the same to their exclusive use and benefit, the indictment was not fatally defective for failure in terms to allege that such acts were "willfully" committed under Rev. St. § 1025 (U. S. Comp. St. 1901, p. 720), providing that no indictment found or presented by a grand jury in any District or Circuit Court of the United States shall be deemed insufficient for any defect in matter of form not tending to defendant's prejudice.
—Nickell v. United States, 161 Fed. 702.....88 C. C. A. 562

CONSTITUTIONAL LAW.

See Public Lands, § 1.

§ 1. **Equal protection of laws.**
The provision of Civ. Code Alaska, § 270, authorizing the court to allow the plaintiff a reasonable attorney's fee on entry of judgment foreclosing a mechanic's or laborer's lien, is not unconstitutional as denying the equal protection of the law.
—Cascaden v. Wimbish, 161 Fed. 241.....88 C. C. A. 277

CONSTRUCTIVE TRUSTS.

See Trusts, § 1.

CONTEMPT.

§ 1. **Acts or conduct constituting contempt of court.**
Proceedings for contempt are of two classes—criminal or punitive, and civil, remedial, or coercive. The former are conducted to preserve the power and vindicate the dignity of the courts and to punish for dis-

Digitized by Google

obedience of their orders. The latter are instituted to protect, preserve, and enforce the rights of private parties and to compel obedience of the orders, judgments and decrees of the courts made to enforce the rights and remedies to which the courts have decided that such parties are lawfully entitled.
—Wasserman v. United States, 161 Fed. 722.....88 C. C. A. 582

§ 2. **Power to punish and proceedings therefor.**
The defendant in a suit in equity was adjudged to pay a fine, and to be committed until he paid it, for contempt of court in violating a preliminary injunction. He sued out a writ of error and died before a hearing here. *Held*, the proceedings for the contempt were civil, and not criminal, and did not abate by his death.
—Wasserman v. United States, 161 Fed. 722.....88 C. C. A. 582

CONTINUANCE.

The granting or refusing of a motion for a continuance is intrusted to the judicial discretion of the trial court, and it is an abuse of that discretion only that is fatal error.
—Armour & Co. v. Kollmeyer, 161 Fed. 78.....88 C. C. A. 242

Proof of due diligence to procure the attendance or the testimony of an absent witness, and of facts which present reasonable grounds to believe that his attendance or evidence will be secured at the next term, is essential to the right of the moving party to a continuance or an admission of the statement of the witness' testimony as evidence.
—Armour & Co. v. Kollmeyer, 161 Fed. 78.....88 C. C. A. 242

Proof of reasonable, but futile, diligence to procure the attendance or testimony of a witness from March 20, 1906, until May 7, 1906, and from April 29, 1907, until May 3, 1907, without evidence of diligence between May 7, 1906, and April 29, 1907, is insufficient.
—Armour & Co. v. Kollmeyer, 161 Fed. 78.....88 C. C. A. 242

CONTRACTS.

Assignment, see Assignments.
Declarations as evidence in action for breach of, see Evidence, § 1.
Jurisdiction of admiralty of action for breach of maritime contracts, see Admiralty, § 1.
Specific performance, see Specific Performance.
Subrogation to rights or remedies of creditors, see Subrogation.

Contracts of particular classes of persons.

See Corporations, § 3; Master and Servant.

Contracts relating to particular subjects.

See Patents, § 4; Trade-Marks and Trade-Names, § 2.

Particular classes of express contracts.

See Indemnity; Insurance; Partnership; Sales.
Affreightment, see Shipping, § 2.
Agency, see Principal and Agent.
Charter parties, see Shipping, §§ 1, 3.
Employment, see Master and Servant.
Leases, see Landlord and Tenant.

Particular classes of implied contracts.

See Money Received.

Digitized by Google

§ 1. **Requisites and validity.**

Evidence *held* insufficient to show that libelant and respondent made an agreement for an exclusive interchange of traffic for three years between libelant's steamships and respondent's railroad.

—Graham v. Oregon R. & Nav. Co., 161 Fed. 262....88 C. C. A. 308

Where plaintiff tendered certain railroad bonds for delivery under a contract of sale, and defendant refused to receive the bonds, on the ground that plaintiff had obtained them under a void contract with the railroad company, such contract being void in fact, plaintiff could not recover for defendant's refusal to receive the bonds, plaintiff, in order to make a foundation for his suit, being forced to establish an unlawful contract, which the courts would not enforce.

—Cobb v. Crittenden, 161 Fed. 510.....88 C. C. A. 452

§ 2. **Modification and merger.**

A provision in a contract for making alterations in a ship for liquidated damages for failure of the contractor to complete the work by the time fixed is not waived nor modified by a further agreement for changes in the specifications or extra work not necessarily requiring additional time, and when none was at the time asked or provided for.

—Morse Dry Dock & Repair Co. v. Seaboard Transp. Co., 161 Fed. 99.....88 C. C. A. 263

§ 3. **Performance or breach.**

Under a contract for making alterations in a vessel containing a provision for the payment by the contractor of liquidated damages for each day's delay in completion of the work beyond the time fixed, and which required the owner to furnish certain machinery to be installed, where it was furnished so late that the contractor could not have completed the work in time, the owner cannot insist on a strict enforcement of the contract by claiming that its own default made no difference, but the contract time for completion must be treated as extended for a sufficient length of time to permit the installment of the machinery after it was furnished, even though the contractor could not have installed it before if it had been delivered in time, and damages can be recovered only for delay beyond such extended time.

—Morse Dry Dock & Repair Co. v. Seaboard Transp. Co., 161 Fed. 99 .....88 C. C. A. 263

CONTRIBUTORY NEGLIGENCE.

See Negligence, § 2.
Of person injured by operation of railroad, see Railorads, § 3.
Of person injured in street, see Municipal Corporations, § 1.
Of servant, see Master and Servant, § 2.

CONVERSION.

Wrongful conversion of personal property, see Trover and Conversion.

CONVEYANCES.

See Assignments; Mortgages.
In fraud of creditors, see Fraudulent Conveyances.
Of homestead, see Homestead, § 1.

Digitized by Google

CORPORATIONS.

Bankruptcy of, see Bankruptcy, § 2.

Particular classes of corporations.

See Municipal Corporations; Railroads.
Insurance companies, see Insurance.

§ 1. Capital, stock, and dividends.

St. 1898, Wis. § 1774, authorizes the stockholders of a corporation to amend its articles of organization so as to increase or diminish its capital stock, and provides that a certified copy of the amendment shall be filed in the office of the Secretary of State and also recorded in the office of the register of deeds where the corporation is located, and that "no amendment shall be of effect until so recorded and such amendment shall be void until so filed and recorded." *Held* that, under such provision, an amendment increasing the capital stock of a corporation upon being filed did not relate back to the time of its adoption, but that until the date of its filing the capital stock for all legal purposes remained as before it was adopted.

—Fishback v. Fond du Lac & N. E. Ry. Co., 158 Fed. 88..... 88 C. C. A. 367

§ 2. Members and stockholders.

A bill by a stockholder against the corporation and a railroad company alleged that a contract was entered into between the two companies by which the railroad company agreed to lend to the other a large sum of money, taking as security a pledge of a majority of the latter's stock, with power to vote the same on default in repayment of any installment of the loan, and an agreement by which it was to name the president and general manager and three of the seven directors of the borrowing company, and which provided that the other directors should not be objectionable to it; that large sums were advanced by the railroad company which were in fact expended for its own benefit, but ostensibly for the benefit of the other company to which they were charged; that by reason of the latter's control by the railroad company so secured it was wholly unable to extricate itself from its indebtedness, and would be absorbed by the railroad company, as was the fraudulent intention when the contract was made; and that the other stockholders would be deprived of their property. The bill prayed for a cancellation of the contract; that an accounting be had in respect to the advances made and the equities of the parties determined. *Held*, that such bill was for the benefit of the corporation of which complainant was a stockholder, and that under its allegations he was not required to tender repayment of the sums advanced by the railroad company.

—Holt v. California Development Co., 161 Fed. 3....88 C. C. A. 167

Where the capital stock of a corporation was issued for patents and cash, a return of the transaction, made to the state department, that the capital stock of the corporation had been increased from $1,000 to $100,000, the additional stock being issued for cash and property, having been received by the department without objection, was sufficient, in the absence of bad faith or fraud.

—Sternberg v. Duryea Power Co., 161 Fed. 540.....88 C. C. A. 482

Pa. Act April 29, 1874 (P. L. 81, § 17), provides that corporations, created thereunder or accepting its provisions, may take patent rights necessary for their business, and issue stock to the amount of the value thereof in payment, and that the stock so issued might be declared and taken as full-paid stock, without liability for further calls or assessments. *Held*, that where a corporation increased its capital stock to $100,000, $85,000 of which was issued in payment for certain patent rights, and S. contributed $10,000, which was applied to the purchase of certain of the patent interests, and also $15,000 representing the balance of the

Digitized by Google

corporation's capital, such transaction having been unchallenged by all the parties in interest for six years, the stock, as against the corporation, should be treated as fully paid, it being immaterial that S., in the division of the stock, in fact secured 810 shares for a cash contribution of $25,000.

—Sternberg v. Duryea Power Co., 161 Fed. 540.....88 C. C. A. 482

§ 3. **Corporate powers and liabilities.**

Section 12 of the New Jersey Corporation Act (P. L. 1896, p. 281), in force in 1896, provides that the business of every corporation shall be managed by its directors who shall be stockholders, and shall be chosen annually by the stockholders, and section 13 provides that every corporation shall have a president, secretary, and treasurer who shall be chosen either by the directors or stockholders as the by-laws direct. *Held*, that a contract made by a corporation organized under such act, by which it agreed to cause three of its seven directors to resign; that their successors should be named by another corporation, and one of such members should be elected president and general manager; that the other directors should be not objectionable to such other corporation; and that such officers and directors should remain in office until a loan should be repaid to the other corporation which did not all become due for six years—was in violation of such provisions of the statute and ultra vires and void, and was not validated by the fact that it contained a further provision by which the outside corporation acquired the right to vote a majority of the stock of the New Jersey corporation.

—Holt v. California Development Co., 161 Fed. 3....88 C. C. A. 167

The purpose of a grant of corporate power is that the corporation shall exercise its powers and carry on its business through its own officers and agents, and an agreement by which it surrenders the management and control of its affairs and business to another corporation organized for a wholly different purpose and carrying on a different business is ultra vires.

—Holt v. California Development Co., 161 Fed. 3....88 C. C. A. 167

A contract made by a corporation which is ultra vires in the true sense is void, and neither the corporation nor a stockholder is estopped to attack its validity by the fact that the corporation or the other party has acted under it, nor by delay in bringing suit for its cancellation.

—Holt v. California Development Co., 161 Fed. 3....88 C. C. A. 167

A corporation executed a mortgage to a trustee to secure a $300,000 issue of bonds. After default in payment of such bonds, it executed a second mortgage to the same trustee to secure an issue of bonds of $500,000, which recited that it was subject only to the prior mortgage, and was given to secure the payment of the bonds given thereunder, which were to be paid by exchanging the same for bonds issued under the new mortgage, and that the holders of such bonds were willing to make the exchange. The first mortgage was not released of record. *Held*, that the provisions of the second mortgage preserved the lien of the first for the benefit of the holders of the bonds so exchanged, but, even if not, that a court of equity would reinstate it for their protection as against an attachment creditor who obtained a lien on the property before the second mortgage was executed, and which was not known to such bondholders or their trustee.

—Griffin v. International Trust Co., 161 Fed. 48.....88 C. C. A. 212

COSTS.

In admiralty, see Admiralty, § 3.

COUNTERFEITING.

The provision of Rev. St. § 5430 (U. S. Comp. St. 1901, p. 3671), making it a criminal offense for any person to have or retain in his control or

Digitized by Google

possession "after a distinctive paper has been adopted by the Secretary of the Treasury for the obligations and other securities of the United States any similar paper adapted to the making of any such obligation or other security, except under the authority of the Secretary of the Treasury or some other proper officer of the United States," includes the having in possession without authority of the distinctive paper itself and of similar paper adapted to the making of government obligations and securities; and it is not sufficient to warrant a conviction thereunder to prove that defendant has in possession paper which might be used to make counterfeit obligations or securities.
—Krakowski v. United States, 161 Fed. 88.....88 C. C. A. 252

COUNTIES.

§ 1. **Fiscal management, public debt, securities, and taxation.**
Where county warrants drawn for the construction of jail cells directed the treasurer to pay the payee the sum specified out of county funds not otherwise appropriated, the fact that the warrants also contained the words "for jail cells" did not make them payable from a special fund.
—Pauly Jail Bldg. & Mfg. Co. v. Jefferson County, 160 Fed. 866....
88 C. C. A. 48

A "county warrant," under the statute of Washington, is a promise by the county to pay it when money applicable thereto comes into the treasury, its maturity by analogy to a note being the time when the county treasurer gives notice of his readiness to pay it and stop the running of interest.
—Pauly Jail Bldg. & Mfg. Co. v. Jefferson County, 160 Fed. 866....
88 C. C. A. 48

Where county warrants payable out of funds not otherwise appropriated were presented for payment, and stamped "not paid for want of funds," and there had been no refusal to pay out of a fund available therefor, the holders were not entitled to judgment against the county, the claim being liquidated, and the holders being entitled to resort to mandamus to compel payment out of funds applicable thereto.
—Pauly Jail Bldg. & Mfg. Co. v. Jefferson County, 160 Fed. 866....
88 C. C. A. 48

Where county warrants for jail cells payable out of funds of the county not otherwise appropriated were accepted by the payee with full knowledge of their terms and of the fact that there were no funds to pay them, the payee would be held to have assented, and agreed to look to the general funds of the county for payment.
—Pauly Jail Bldg. & Mfg. Co. v. Jefferson County, 160 Fed. 866....
88 C. C. A. 48

Where, in an action on county warrants given for the construction of certain jail cells and not paid for want of funds, the complaints alleged that the warrants were payable out of a fund raised from the sale of bonds, and that though the money raised from the bonds was authorized to be used for other purposes than for the payment of the courthouse and jail, none of it had been paid out in refunding prior indebtedness, the county having denied its possession of any of the money, it would be presumed that it was paid out for other proper purposes, and hence defendant's admission that it had received the money did not shift the burden of proof to defendant to show what disposition had been made thereof.
—Pauly Jail Bldg. & Mfg. Co. v. Jefferson County, 160 Fed. 866....
88 C. C. A. 48

COURTS.

Contempt of court, see Contempt.
Province of court and jury, see Trial, § 3.
Review of decisions, see Appeal and Error.
Trial by court without jury, see Trial, § 4.

Digitized by Google

§ 1. Establishment, organization, and procedure in general.

The fact that complainant submitted himself to the jurisdiction of a state court when he recovered a judgment against F., and that the jurisdiction of such court was sufficiently broad to afford complainant all the relief prayed for in a creditors' suit, did not deprive him of the right to institute such suit in the federal courts against defendants who were not parties to the action in the state court.

—Feidler v. Bartleson, 161 Fed. 30.....88 C. C. A. 194

§ 2. United States courts.

In a suit in a federal court in which jurisdiction depends on citizenship, the court will arrange the parties as plaintiffs and defendants according to their interest, and, if such arrangement defeats the jurisdiction, the bill will be dismissed.

—Mann v. Gaddie, 158 Fed. 42.....88 C. C. A. 1

Where a judgment of a Circuit Court is taken by writ of error to the Circuit Court of Appeals for review on the merits, that court may certify the question of the jurisdiction of the Circuit Court to the Supreme Court for decision, or it may itself determine such question.

—Grand Trunk Western Ry. Co. v. Reddick, 160 Fed. 898.....
88 C. C. A. 80

An admission made on the trial of an action in the Circuit Court of "the liability of defendant in this case and everything as alleged except the measure of damages" does not cure the omission of the declaration to allege facts giving the court jurisdiction.

—Grand Trunk Western Ry. Co. v. Reddick, 160 Fed. 898.....
88 C. C. A. 80

A right given by a state statute to one in possession to maintain a suit to quiet title may be enforced in the federal courts.

—Kraus v. Congdon, 161 Fed. 18.....88 C. C. A. 182

Where a creditor's bill in a federal court to enforce a state judgment sought to establish the existence of a partnership only for the purpose of subjecting the interest of the surviving partner in the partnership funds to the payment of complainant's judgment, the bill was not demurrable on the ground that complainant sought thereby to compel defendants, who were both residents of the state, to litigate in the Circuit Court a demand which one had against the other.

—Feidler v. Bartleson, 161 Fed. 30.....88 C. C. A. 194

A creditor's bill may be maintained in a federal Circuit Court to enforce a domestic judgment of the state court.

—Feidler v. Bartleson, 161 Fed. 30.....88 C. C. A. 194

Where a cause in a District Court, which is triable by jury under Rev. St. § 566 (U. S. Comp. St. 1901, p. 461), is by consent of the parties tried to the court without a jury, no question of fact or law decided upon or in connection with the trial is subject to re-examination in an appellate court.

—United States v. Cleage, 161 Fed. 85.....88 C. C. A. 249

Rev. St. §§ 649, 700 (U. S. Comp. St. 1901, pp. 525, 570), which provide for waiving a jury and for the review of judgments rendered in causes where there is such a waiver, relate exclusively to trials in the Circuit Courts, and there are no similar provisions in respect of trials in the District Courts.

—United States v. Cleage, 161 Fed. 85.....88 C. C. A. 249

The decisions of the Missouri Courts of Appeal, while entitled to respectful consideration, are not the decisions of the highest judicial tribunal of the state, which are alone binding on the federal courts in their construction of local statutes.

—Federal Lead Co. v. Swyers, 161 Fed. 687.....88 C. C. A. 547

A bill to compel specific performance of a contract to assign a patent and to restrain the alleged violation of a license contract under a patent

Digitized by Google

states no ground for relief under the patent laws, and a federal court is without jurisdiction to grant relief thereon, unless there is diversity of citizenship between the parties.
—St. Louis Street Flushing Mach. Co. v. Sanitary Street Flushing Mach. Co., 161 Fed. 725.....88 C. C. A. 585

Whether a nonresident is entitled to maintain an action for wrongful death under a state statute is a question which goes to the defense of such an action, and does not affect the jurisdiction of a federal court therein.
—Pennsylvania Co. v. Scofield, 161 Fed. 911.....88 C. C. A. 602

§ 3. Concurrent and conflicting jurisdiction, and comity.
Where complainant sought to enforce a judgment against F. out of the proceeds of an alleged partnership in the hands of the administratrix of the deceased partner, the fact that the judgment was recovered in the superior court of King county, Wash., on the probate side of which the administration of the estate of the deceased partner was pending, did not require prosecution of the creditor's bill in that court, the equity and probate jurisdiction of which is separate and distinct, complainant not being able to procure appropriate relief in the probate proceedings.
—Feidler v. Bartleson, 161 Fed. 30.....88 C. C. A. 194

Petitioner was adjudged insane by a justice of the Supreme Court of New York, and committed to an asylum, from which he subsequently escaped and went to Virginia. On his application he was adjudged sane by a court of that state, and thereafter instituted an action for conversion in a federal court in New York against his committee appointed by a court of that state on an adjudication of insanity against him, and who had taken possession of his property in that state. In his complaint he alleged that he was a citizen of Virginia, set up the judgment of its court declaring him sane, and alleged that the judgments and orders of the New York courts were void for want of jurisdiction. *Held* that, on the allegations of his complaint, he had the constitutional right to maintain such action in the federal court, which right that court was bound to protect; that it appearing that his presence in that court was necessary for the trial of the issues joined therein, but that, if found in New York, he was subject under its laws to be apprehended and retaken to the asylum without further court proceedings, the federal court had power to grant him a writ of protection which should entitle him to come to that state, to remain during the trial, and to depart therefrom in the custody and under the protection of the United States marshal and without interference with his personal liberty by the officers or agents of the state.
—Chanler v. Sherman, 162 Fed. 19.....88 C. C. A. 673

A federal court has power to protect a litigant therein from seizure of his person by the authorities of a state while in attendance upon the trial of his case, whether upon process or in the exercise of the police power of the state without process, where necessary for the protection of its own jurisdiction, and where the threatened act must rest for its justification upon a proceeding the validity of which is the very matter it is called upon to determine.
—Chanler v. Sherman, 162 Fed. 19.....88 C. C. A. 673

CREDIBILITY.

Of witness, see Witnesses, § 3.

CREDITORS.

See Bankruptcy; Creditors' Suit; Fraudulent Conveyances.
Subrogation to rights of creditor, see Subrogation.

Digitized by Google

CREDITORS' SUIT.

Jurisdiction of United States courts, see Courts, § 2.

A judgment creditor was entitled to enforce his judgment by an original bill in equity, notwithstanding he might have obtained relief at law by garnishment proceedings.
—Feidler v. Bartleson, 161 Fed. 30.....88 C. C. A. 194

The rule that whenever a judgment is sought to be enforced to the detriment of a third person, he may avoid its effect by showing that the party to the former action colluded and procured the judgment to defraud him, has no application where the judgment creditor is seeking to compel payment out of funds equitably belonging to the judgment debtor.
—Feidler v. Bartleson, 161 Fed. 30.....88 C. C. A. 194

Where various claims against a surviving partner were assigned to complainant and merged in a judgment valid on its face and unimpeachable for fraud, complainant's right to enforce payment of the judgment was as unimpeachable as if the judgment had been based on a valid debt originally payable to him.
—Feidler v. Bartleson, 161 Fed. 30.....88 C. C. A. 194

Where a creditor's bill sought to compel payment of a judgment against an alleged surviving partner out of the assets of a firm in the possession of the administratrix of the deceased partner, allegations that the judgment had been obtained by complainant against such surviving partner, based on various accounts which had been assigned to complainant by parties doing business in the eastern states, and that such surviving partner had entered into a conspiracy with complainant and others to defraud the estate of the deceased partner, and that he had no interest in the suit, but was permitting his name to be used in furtherance of the conspiracy; that complainant was not the real party in interest and that the accounts on which the judgment was based were barred by limitations, were insufficient to show either a conspiracy or fraud sufficient to invalidate the judgment.
—Feidler v. Bartleson, 161 Fed. 30.....88 C. C. A. 194

CRIMINAL LAW.

Indictment, information, or complaint, see Indictment and Information.

Particular offenses.

See Conspiracy, § 1; Contempt; Counterfeiting; Perjury.
Against bankrupt laws, see Bankruptcy, § 5.
Against internal revenue laws, see Internal Revenue.

§ 1. Nature and elements of crime and defenses in general.
There are no crimes or offenses cognizable in the federal courts outside of maritime or international law or treaties except such as are created and defined by act of Congress, and where the statute designates and denounces a crime of the character or class which at common law was regarded as a felony, without naming it as a misdemeanor, it is to be classed as a felony, but not if it is termed by the statute a misdemeanor. If the statute adopts a state statute as to an offense made a felony by the state law, it may be so treated by the federal courts.
—Morris v. United States, 161 Fed. 672.....88 C. C. A. 532

§ 2. Former jeopardy.
Where there are two actions between the same parties upon different causes of action, and there is, or may be, a material issue that may not have been raised, litigated, and decided in the action which has gone to

Digitized by Google

verdict, the burden is on him who asserts to prove by pleading or evidence that the issue, right, or matter in question was actually and necessarily litigated and determined in the earlier trial.

The test of identity of issues is the identity of the evidence requisite to sustain them.

—Wilcox v. United States, 161 Fed. 109.....88 C. C. A. 273

§ 3. Trial.

Where the parties by their interlocution invited the court to deliver oral instructions without objection or exception thereto at the time, defendant waived his right to written instructions, under St. 1893, Okl. § 5196, providing that all instructions given shall be in writing, unless waived by both parties.

—Williams v. United States, 158 Fed. 30.....88 C. C. A. 296

§ 4. Appeal and error, and certiorari.

Where, in a prosecution for violating the internal revenue law, defendant admitted that he was a wholesale liquor dealer, and did not object at the trial to parol evidence of such fact, he could not object on writ of error that the court erred in not requiring proof of such fact by the certificate in the district revenue collector's office.

—Williams v. United States, 158 Fed. 30.....88 C. C. A. 296

Where accused received a severe punishment, it was the province of the appellate court to correct an error in an instruction as to the burden of proof, prejudicial to accused, though a sufficient exception was not saved thereto.

—Williams v. United States, 158 Fed. 30.....88 C. C. A. 296

When error is apparent in the record, it is presumptively injurious to the party against whom it has been committed, unless it appears beyond doubt that it did not and could not prejudice his rights.

—Williams v. United States, 158 Fed. 30.....88 C. C. A. 296

The objection that an indictment in a federal court fails to show on its face that the grand jury which returned it came from the district in which it was found is one to a matter of form only and under Rev. St. § 1025 (U. S. Comp. St. 1901, p. 720), does not render the indictment insufficient, at least when first raised in an appellate court.

—Morris v. United States, 161 Fed. 672.....88 C. C. A. 532

CROSS-EXAMINATION.

See Witnesses, § 2.

CUSTOMS DUTIES.

§ 1. Validity, construction, and operation of customs laws in general.

Foraker Act April 12, 1900, c. 191, § 3, 31 Stat. 77, authorized, on articles from Porto Rico, coming into the United States, the imposition of a tax equal to the internal revenue tax imposed in the United States "upon the like articles of merchandise of domestic manufacture." *Held* as to Porto Rican bay rum that, as there is no internal revenue tax, eo nomine, upon domestic bay rum, it is not subject to this provision, notwithstanding that a tax is provided for "distilled spirits."

—Anderson v. Newhall, 161 Fed. 906.....88 C. C. A. 511

§ 2. Goods subject to duty, rate, and amount.

In applying the provision in Tariff Act July 24, 1897, c. 11, § 1, Schedule N, par. 432, 30 Stat. 191 (U. S. Comp. St. 1901, p. 1675), for "hats * * * trimmed, * * * composed wholly or in chief value of fur," the composition of the hats should be determined by reference to the whole hat, including the trimming; so that where hats, the bodies of which are fur,

Digitized by Google

are so trimmed that the silk trimming is the component of chief value in the hats, they are dutiable under Schedule L, par. 390, 30 Stat. 187 (U. S. Comp. St. 1901, p. 1670), as "wearing apparel in chief value of silk."
—Leon Rheims Co. v. United States, 160 Fed. 925...88 C. C. A. 107

Bay rum is not within the enumeration of "distilled spirits," defined in section 3248, Rev. St. (U. S. Comp. St. 1901, p. 2107), as "ethyl alcohol, * * * including all dilutions and mixtures of this substance."
—Anderson v. Newhall, 161 Fed. 906.....88 C. C. A. 511

§ 3. Payment and collection, refunding, and drawback.
On the refund of duties that had been improperly exacted, interest was withheld on the ground that there was no appropriation for payment of interest; so that the sum repaid was the exact equivalent of the principal. *Held*, that the acceptance of this sum by the importer was tantamount to a waiver of the claim of interest, and could not be considered as a general payment on account, which the payee was entitled to apply, first, to the extinguishment of the interest and, next, to part payment of the principal.
—Bidwell v. Preston, 160 Fed. 653.....88 C. C. A. 19

Where the government repaid duties which had been improperly exacted by its agent, a collector of customs, this did not constitute a payment by a stranger which could not inure to the benefit of the collector.
—Bidwell v. Preston, 160 Fed. 653.....88 C. C. A. 19

DAMAGES.

Damages for particular injuries.

See Collision, § 7; Death, § 1.
Breach of contract for carriage of passengers, see Carriers, § 2.

§ 1. Grounds and subjects of compensatory damages.
There was substantial evidence that the collision of two one-horse teams, induced by the negligence of defendant's driver, caused a fright of the plaintiff that produced an impairment of nervous power, weakness and suffering.
Held, inasmuch as the natural and probable effect of such a collision, which a person of reasonable prudence would have anticipated, was some fright, shock, and injury, the fact that the extent of it was indeterminate and impossible of anticipation was no bar to a recovery of compensation for the actual pecuniary loss caused by the negligence.
—Armour & Co. v. Kollmeyer, 161 Fed. 78.....88 C. C. A. 242

DEATH.

Liability for death of person caused by operation of railroad, see Railroads, § 3.
Liability of master for death of servant, see Master and Servant, § 2.
Province of court and jury in action for, see Trial, § 3.

§ 1. Actions for causing death.
Code Ala. 1896, § 25, provides that a father, or, in certain cases, the mother, may sue for an injury to a minor child, a member of the family. Section 26 declares that, when the death of a minor is caused by the wrongful act of another, the father or mother or personal representative of the minor may sue and recover "such damages as the jury may assess," and section 27 provides that a personal representative may maintain an action and recover such damages as the jury may assess for the wrongful act of another, whereby the death of his testator or intestate was caused, the proceeds of which are distributable under the statute of distributions, without liability for debts. *Held*, that in an action by a

Digitized by Google

father for the wrongful death of his minor son, he was not limited to the recovery of compensatory damages only, but was entitled to recover such damages as the jury might assess under all the facts and circumstances in the case, uninfluenced by passion, sympathy, or feeling.
—Sloss-Sheffield Steel & Iron Co. v. Drane, 160 Fed. 780..... 88 C. C. A. 34

Upon the question of the damages sustained by the wife and children of a person killed by reason of his death, it was not error to permit the health, character, and earning capacity of the deceased to be shown for the period extending back from the time of his death to his young manhood; and in such connection evidence showing his earnings during the time of a partnership formed for carrying on his trade as a skilled workman 15 years before his death was admissible.
—Grand Trunk Western Ry. Co. v. Reddick, 160 Fed. 898..... 88 C. C. A. 80

A right of action for wrongful death, accrued under a statute of one state, may be enforced in a federal court in another having jurisdiction of the parties, at least where such statute is not contrary to the public policy of the state in which the action is brought, without regard to any special rule or statute of such state either authorizing or inhibiting actions in the local courts on causes arising elsewhere.
—Missouri Pac. Ry. Co. v. Larussi, 161 Fed. 66.....88 C. C. A. 230

The amendment of the Kansas employer's liability act, adopted in 1903, which provides that notice in writing of an injury sustained, "stating the time and place thereof, shall have been given by or on behalf of the person injured to such railroad company within 90 days after the occurrence of the accident," does not require that such notice should have been given by an administrator, suing for an injury which caused the death of his intestate, as a condition precedent to such action.
—Missouri Pac. Ry. Co. v. Larussi, 161 Fed. 66.....88 C. C. A. 230

Under the Pennsylvania statutes of 1851 (P. L. 674, § 19) and 1855 (P. L. 309), giving a right of action for wrongful death, as construed by the Supreme Court of the state, the expectation of pecuniary benefit from the life of the deceased gives a right of recovery to the relatives named in the statute, and it is not necessary that the plaintiff should have been dependent upon or have had a legal claim upon the services of the deceased.
—Pennsylvania Co. v. Scofield, 161 Fed. 911.....88 C. C. A. 602

DEBTOR AND CREDITOR.

See Bankruptcy; Creditors' Suit; Fraudulent Conveyances.

DECEDENTS.

Estates, see Executors and Administrators.

DECLARATIONS.

As evidence in civil actions, see Evidence, § 1.

DEEDS.

In fraud of creditors, see Fraudulent Conveyances.
Of homestead, see Homestead, § 1.
Of trust, see Mortgages.

Digitized by Google

DEFAMATION.

See Libel and Slander.

DELIVERY.

Of insurance policy, see Insurance, § 3.
Of property taken in replevin, see Replevin, § 2.

DEMURRAGE.

See Shipping, § 3.

DEMURRER.

To indictment, see Indictment and Information, § 2.

DENIALS.

In pleading, see Pleading, § 1.

DEPOSITIONS.

See Witnesses.

DESCENT AND DISTRIBUTION.

See Executors and Administrators.

DETINUE.

See Replevin.

DILIGENCE.

Affecting right to continuance, see Continuance.

DISCHARGE.

From indebtedness, see Bankruptcy, § 3.
From employment, see Master and Servant, § 1.

DISCRETION OF COURT.

Granting or refusing continuance, see Continuance.
Review in civil actions, see Appeal and Error, § 7.

DISSOLUTION.

Of attachment, see Attachment, § 1.
Of partnership, see Partnership, § 2.

Digitized by Google

DISTRIBUTION.

Of estate of bankrupt, see Bankruptcy, § 2.

DIVERSE CITIZENSHIP.

Ground of jurisdiction of United States courts, see Courts, § 2.

DOCKS.

See Wharves.

DOMICILE.

Residence as ground of jurisdiction, see Courts, § 2.

DRAWBACK.

On re-exportation of goods after payment of duties, see Customs Duties, § 3.

DUPLICITY.

In indictment, see Indictment and Information, § 1.

DUTIES.

Customs duties, see Customs Duties.
Excise duties, see Internal Revenue.

EMINENT DOMAIN.

Mandamus to compel record of judgment in condemnation proceedings, see Mandamus, § 1.

§ 1. **Proceedings to take property and assess compensation.**

In a proceeding for the condemnation of a part of a tract of land, to authorize the court to submit to the jury the question whether the value of the part not taken was diminished by the taking, and, if so, to what extent, as an element of damages recoverable, there must ordinarily have been testimony on the subject from witnesses shown to have special knowledge or qualifications to enable them to form an intelligent and correct judgment, and the fact that the jury viewed the premises cannot dispense with such testimony.

—Town of Hingham v. United States, 161 Fed. 295; In re United States, Id. ..... 88 C. C. A. 341

In a proceeding by the United States to condemn land for public purposes, brought in conformity to Rev. Laws Mass. c. 1, § 7, the rule of Bauman v. Ross, 167 U. S. 548, 17 Sup. Ct. 966, 42 L. Ed. 270, was applied, to the effect that the owner is not entitled to interest pending the proceedings, at least unless he proves that he has in fact suffered loss of the use of the land by reason thereof.

—Town of Hingham v. United States, 161 Fed. 295; In re United States, Id. ..... 88 C. C. A. 341

Digitized by Google

§ 2. Remedies of owners of property.

Act April 3, 1905 (Sess. Laws Hawaii 1905) No. 23, § 1, requires the registrar of conveyances to file, on the payment of a fee, any plan of land, if it contains the name of the owner, etc. Section 2 prescribes what writing and mathematical markings shall appear upon a plan authorized to be filed under section 1, etc. Section 3 prescribes the size of the cloth upon which a plan is shown, and the scale upon which it must be drawn. Section 4 forbids the registrar to accept for record or to record any plan after the taking effect of the act. The title reads: "An act providing for the filing of plans and surveys of lands," etc., disclosing no purpose to amend or repeal statutes requiring record of condemnation judgments or of conveyances, where maps are themselves attached to the deed as included parts of the description. Rev. Laws Hawaii 1905, § 506, requires a judgment of condemnation to be filed and recorded before title to property, acquired by condemnation proceedings, shall vest in plaintiff. Section 2380 makes unrecorded deeds void as against subsequent purchasers without notice. Section 2358 requires the registrar to make literal copy of all instruments required to be recorded in his office. *Held*, that Act No. 23 does not cover the subject of recording judgments in condemnation suits, that it is not a substitute for section 506, and that it does not affect the recording of conveyances wherein a description of the property conveyed is included, without reference to plats on file in the registrar's office.

—United States v. Merriam, 161 Fed. 303.....88 C. C. A. 349

Under Rev. Laws Hawaii 1905, § 506, requiring a judgment of condemnation to be filed and recorded before title to property, acquired by condemnation proceedings, shall vest in plaintiff; and under section 2380, making unrecorded deeds void as against subsequent purchasers without notice, where the United States condemned land, and afterwards received a deed from owners of the property, registration of both the deed and the judgment of condemnation was essential to the security of the government's title, as against subsequent purchasers.

—United States v. Merriam, 161 Fed. 303.....88 C. C. A. 349

§ 3. Title or rights acquired.

Under the direct terms of Rev. Laws Hawaii 1905, § 506, title to property acquired by condemnation proceedings does not vest in plaintiff until judgment of condemnation has been filed and recorded in the office of the registrar of conveyances.

—United States v. Merriam, 161 Fed. 303.....88 C. C. A. 349

EMPLOYÉS.

See Master and Servant.

EQUITABLE ESTOPPEL.

See Estoppel, § 1.

EQUITY.

Equitable estoppel, see Estoppel, § 1.

Particular subjects of equitable jurisdiction and equitable remedies.

See Creditors' Suit; Fraudulent Conveyances; Injunction; Quieting Title; Receivers; Specific Performance; Trusts.

Suits for infringement of patents, see Patents, § 5.

§ 1. Jurisdiction, principles, and maxims.

Under the rules and regulations adopted and promulgated by the Louisiana Purchase Exposition Company for the government of exhibitors and

Digitized by Google

the making of awards, which created a superior jury, with power to finally pass upon the recommendations of department and group juries and to make awards after notice to exhibitors affected and an opportunity to be heard, an award so made after a full hearing is conclusive, and cannot be reviewed by the courts, unless some ground of equitable jurisdiction, such as fraud, accident, or mistake, is shown; nor can the company be compelled to change its records or enjoined from publishing the true purport of its proceedings at suit of an exhibitor.
—Borden's Condensed Milk Co. v. Louisiana Purchase Exposition Co., 160 Fed. 919.....88 C. C. A. 101

§ 2. Parties and process.
Where a large number of persons are separately, but similarly, interested in a trust fund, a bill in equity for an accounting with respect to such fund and for direction as to its administration may be maintained by a part of such body in behalf of all.
—Watson v. National Life & Trust Co., 162 Fed. 7...88 C. C. A. 380

An insurance corporation issued a large number of policies, by which in consideration of the payment of premiums during a fixed term it contracted to pay a certain sum to each policy holder at the end of such term, together with an equitable portion of a profit fund to be made up from gains and profits from lapses and other sources. While such policies were outstanding the company transferred its assets to another company, disenabling itself from performing its contracts, and went out of business. Its successor, after issuing similar policies, transferred its assets to a third, and the third to a fourth, company. *Held*, that holders of policies in the transferring companies were entitled to join in a bill in equity for some form of relief with respect to the assets transferred as a trust fund.
—Watson v. National Life & Trust Co., 162 Fed. 7...88 C. C. A. 380

An insurance corporation issued a large number of policies, by which, in consideration of the payment of premiums during a fixed term, it contracted to pay a certain sum to each policy holder at the end of such term, together with an equitable portion of a profit fund to be made up from gains and profits from lapses and other sources. While such policies were outstanding, the company transferred its assets to another company, disenabling itself from performing its contracts, and went out of business. Its successor, after issuing similar policies, transferred its assets to a third, and the third to a fourth company. *Held*, that in an action by the holders of policies in the transferring companies for some form of relief with respect to the assets transferred as a trust fund, where the bill contained allegations tending to negative any novation, all the companies could be joined as defendants.
—Watson v. National Life & Trust Co., 162 Fed. 7...88 C. C. A. 380

§ 3. Pleading.
The joining of several complainants in a bill in equity, the purpose of which is to secure an accounting of a trust fund in which all of the complainants claim an interest, with others, although their interests are several, does not render such bill multifarious.
—Watson v. National Life & Trust Co., 162 Fed. 7...88 C. C. A. 380

§ 4. Hearing, submission of issues to jury, and rehearing.
While a general denial in an answer of all the allegations of the bill not expressly admitted, or a negative pregnant, is insufficient on exceptions to the answer, all objections to the forms of denials are waived under equity rule No. 61 by the filing of a replication, and upon a hearing on bill, answer, and replication they do not constitute admissions of any of the averments they were interposed to deny. Where the essential equities of a bill are challenged by a general denial upon such a hearing, the complainant is entitled to no relief.
—People's United States Bank v. Gilson, 161 Fed. 286.....
88 C. C. A. 332

Digitized by Google

Where a case is set down for hearing on bill and answer, all the facts well pleaded in the answer are taken as true, whether responsive to the bill or not. But, where a case is set down for hearing on bill, answer, and replication, only those averments of the answer which are responsive to the bill are taken as true. All allegations in avoidance or justification are denied by the replication, and are taken as untrue.

—People's United States Bank v. Gilson, 161 Fed. 286..... 88 C. C. A. 332

§ 5. **Masters and commissioners, and proceedings before them.**

The reference of a case to a master, without the consent of parties, to make findings of fact, is not error where such findings are treated as advisory only, and the ultimate findings are made by the court.

—Babcock v. De Mott, 160 Fed. 882.....88 C. C. A. 64

ERROR, WRIT OF.

See Appeal and Error.

ESTABLISHMENT.

Of trusts, see Trusts, § 4.

ESTATES.

Decedents' estates, see Executors and Administrators.
Estates for years, see Landlord and Tenant.
Trusts, see Trusts, § 2.

ESTOPPEL.

By judgment, see Judgment, § 2.
To avoid or forfeit insurance policy, see Insurance, § 3.
To deny corporate powers, see Corporations, § 3.

§ 1. **Equitable estoppel.**

The fact that one of the assignors of a patent subsequently became associated with others, and with them is charged with infringement of such patent, does not estop them to deny its validity, where the relations between the defendants are not shown.

—St. Louis Street Flushing Mach. Co. v. Sanitary Street Flushing Mach. Co., 161 Fed. 725.....88 C. C. A. 585

EVIDENCE.

See Witnesses.
Questions of fact for jury, see Trial, § 2.
Reception at trial, see Trial, § 1.

As to particular facts or issues.

See Judgment, § 4; Partnership, § 1.
Invention, see Patents, § 1.
Negligence of master, see Master and Servant, § 2.
Ratification of assignment, see Assignments, § 2.

In actions by or against particular classes of persons.

Trustee in bankruptcy, see Bankruptcy, § 2.

Digitized by Google

In particular civil actions or proceedings.

See Negligence, § 3.
Admiralty, see Collision, § 7.
For causing death, see Death, § 1.
For charter hire, see Shipping, § 1.
For infringement of trade-mark, see Trade-Marks and Trade-Names, § 3.
For personal injuries, see Master and Servant, § 2; Steam.
For unfair competition, see Trade-Marks and Trade-Names, § 3.
On county warrants, see Counties, § 1.

In criminal prosecutions.

See Perjury, § 2.
For offense against bankrupt laws, see Bankruptcy, § 5.

Review and procedure thereon in appellate courts.

See Appeal and Error, § 7.
Harmless error in rulings on, see Appeal and Error, § 7.
Review of discretionary rulings on, see Appeal and Error, § 7.

§ 1. **Declarations.**
In an action for breach of a contract, communications between respondent's agents were inadmissible to affect libelant.
—Graham v. Oregon R. & Nav. Co., 161 Fed. 262.....88 C. C. A. 308

§ 2. **Opinion evidence.**
When an issue, its subject-matter, and the facts which condition its decision are simple and open to the common understanding so that no special skill or experience is requisite to form a correct judgment upon it, the opinions of witnesses regarding it are not admissible.
—Lake v. Shenango Furnace Co., 160 Fed. 887.....88 C. C. A. 69

Hypothetical questions propounded to an expert witness are not objectionable merely because the evidence tending to establish the facts assumed therein is contradicted.
—Chicago Great Western Ry. Co. v. McDonough, 161 Fed. 657..... 88 C. C. A. 517

§ 3. **Weight and sufficiency.**
Where the testimony of a witness is positively contradicted by the physical facts, neither the court nor the jury can be permitted to credit it.
—Missouri, K. & T. Ry. Co. v. Collier, 157 Fed. 347...88 C. C. A. 127

EXAMINATION.

Of expert witnesses, see Evidence, § 2.
Of witnesses in general, see Witnesses, § 2.

EXCEPTIONS.

Necessity for purpose of review, see Criminal Law, § 4.
Taking exceptions at trial, see Trial, § 3.

EXCEPTIONS, BILL OF.

§ 1. **Settlement, signing, and filing.**
After the expiration of the term at which the cause was tried, the court cannot allow a bill of exceptions nunc pro tunc unless control over the case has been reserved by rule or order.
—Reader v. Haggin, 160 Fed. 909.....88 C. C. A. 91

Digitized by Google

EXCISE.

Duties, see Internal Revenue.

EXECUTION.

See Attachment; Judicial Sales.

EXECUTORS AND ADMINISTRATORS.

Testamentary trustees, see Trusts.

§ 1. Appointment, qualification, and tenure.

A probate court, in appointing an administrator, is presumed to have been acting within its jurisdiction; and such presumption is not overcome by the fact that the decedent, shown to have resided in the state and county where the appointment was made for several years, was at the time of his death engaged on construction work on a railroad in another state, where he boarded and lodged during such work, or that an administrator was there appointed after his death.

—Missouri Pac. Ry. Co. v. Larussi, 161 Fed. 66.....88 C. C. A. 230

EXPERT TESTIMONY.

In civil actions, see Evidence, § 2.

FACTORS.

See Brokers.

FALSE SWEARING.

See Perjury.

FAULT.

Of vessel in collision, see Collision, §§ 1–3, 5.

FEDERAL COURTS.

See Courts, § 2.

Pendency of suit in state court as ground for abatement of suit in, see Abatement and Revival, § 1.

FEDERAL QUESTIONS.

Ground for jurisdiction, see Courts, § 2.

FELLOW SERVANTS.

See Master and Servant, § 2.

Digitized by Google

FINAL JUDGMENT.

Appealability, see Appeal and Error, § 1.

FINDINGS.

Review on appeal or writ of error, see Appeal and Error, § 7.

FISH.

An owner or claimant of lands in Alaska which border on navigable waters, having no right to the shore lands, has no exclusive right of fishery in such waters nor to erect and maintain a fish trap either on the shore between high and low water mark, or in the adjacent deep waters to the exclusion of others.
—Columbia Canning Co. v. Hampton, 161 Fed. 60...88 C. C. A. 224

FOG.

Collision of vessels, see Collision, § 4.

FORECLOSURE.

Of mortgage, see Railroads, § 1.

FOREIGN JUDGMENTS.

See Judgment, § 3.

FORESTS.

See Woods and Forests.

FORFEITURES.

Of insurance, see Insurance, § 2.
Of wages by seaman, see Seamen.

FORGERY.

See Counterfeiting.

FORMER ADJUDICATION.

See Judgment, § 2.

FORMER JEOPARDY.

Bar to prosecution, see Criminal Law, § 2.

FORMS OF ACTION.

See Replevin; Trespass, § 1; Trover and Conversion.

Digitized by Google

FRAUD.

See Fraudulent Conveyances.

FRAUD ORDERS.

See Post Office, § 1.

FRAUDULENT CONVEYANCES.

§ 1. Transfers and transactions invalid.

A bill by a judgment creditor of a mining company to annul a prior judgment obtained against such company by another creditor, on the ground that the latter made himself personally responsible for complainant's debt, that when his own debt was created he made certain promises to the company which he did not perform, and that the company, in which such prior judgment creditor was a large stockholder, shut down its works and failed to redeem property sold under an execution against it, *held* not to allege facts which entitled complainant to the relief sought.

—Great Falls Nat. Bank v. McClure, 161 Fed. 56....88 C. C. A. 220

That no attempt was made to enforce a judgment in an action at law in which property was attached until five years after it was rendered is not ground for the annulling of such judgment by a court of equity at suit of a subsequent creditor of the same debtor, who brought an action on his claim and recovered judgment after execution had been issued on the prior judgment; no facts being alleged to show that such prior judgment was not based on a valid indebtedness.

—Great Falls Nat. Bank v. McClure, 161 Fed. 56....88 C. C. A. 220

GAME.

See Fish.

GARNISHMENT.

See Attachment.

GRAND JURY.

See Indictment and Information.

GRANTS.

Of public lands, see Public Lands.

GUARANTY.

See Indemnity.

GUARANTY INSURANCE.

See Insurance, § 4.

HARMLESS ERROR.

In civil actions, see Appeal and Error, § 7.
In criminal prosecutions, see Criminal Law, § 4.

Digitized by Google

HEARING.

In equity, see Equity, § 4.

HIGHWAYS.

See Municipal Corporations, § 1.
Accidents at railroad crossings, see Railroads, § 3.

HOMESTEAD.

Specific performance of contract to convey homestead, see Specific Performance, § 1.

§ 1. Transfer or incumbrance.
An executory contract to convey a homestead, signed by the husband alone, is within Rev. St. Mo. 1899, § 3616 (Ann. St. 1906, p. 2034), which provides that every sale or alienation of a homestead by the husband shall be null and void, and such a contract can neither be enforced in equity nor be made the basis of an action for damages for nonperformance.
—Mundy v. Shellaberger, 161 Fed. 503.....88 C. C. A. 445

HUSBAND AND WIFE.

Confidential communications, see Witnesses, § 1.
Conveyance of homestead, see Homestead, § 1.

HYPOTHETICAL QUESTIONS.

To expert witnesses, see Evidence, § 2.

IMPEACHMENT.

Of witness, see Witnesses, § 3.

IMPLIED CONTRACTS.

See Money Received.

IMPORTS.

Duties, see Custom Duties.

IMPUTED NEGLIGENCE.

See Negligence, § 2.

INDEMNITY.

Limits of land grants, see Public Lands, § 2.

When one who has a right to recover over is sued, the judgment regularly rendered against him is conclusive on the indemnitor, provided no-

Digitized by Google

tice of the suit be given to the latter and full opportunity afforded him to defend, but, if the liability over is not as broad as the original liability, plaintiff, in the suit to recover over, if he relies on the adjudication made in the former case, must show that the very ground of liability against the indemnitor was found to exist and was necessarily adjudicated in the original suit, as the estoppel created by the first judgment cannot extend beyond the questions necessarily determined by it.

—B. Roth Tool Co. v. New Amsterdam Casualty Co., 161 Fed. 709.... 88 C. C. A. 569

INDEMNITY INSURANCE.

See Insurance, § 4.

INDIANS.

Rights in public lands, see Public Lands, § 1.

Act May 17, 1884, c. 53, 23 Stat. 24, extending the mining laws to Alaska, section 8 (p. 26) which provides that Indians or other persons shall not be disturbed in the possession of any lands "actually in use or occupation or now claimed by them," refers only to possession held at the time of its passage, and does not protect possession acquired since.

—Columbia Canning Co. v. Hampton, 161 Fed. 60....88 C. C. A. 224

The Indian agreement of 1883 between the United States and Chiefs Moses and Sar-sarp-kin of the Columbia reservation provided for the removal of the tribe at their election, for their surrender of certain reservation lands, and for the allotment in severalty of one square mile of land to each head of a family or male adult, in the possession and ownership of which they should be guaranteed and protected. The agreement was ratified by Act Cong. July 4, 1884, c. 180, 23 Stat. 79, providing that, if the Indians elected to remain on the Columbia reservation, the Secretary of the Interior should cause the quantity of land stipulated in the agreement to be allowed them, which, when selected, should be held for the exclusive use and occupation of the Indians, and the remainder of the reservation be restored to the public domain. *Held*, that Indians to whom lands were allotted in severalty under such treaty acquired a mere right of possession and use, the title remaining in the United States, and that the government was therefore entitled to maintain ejectment against a third person, who had ousted the Indian allottees from possession.

—United States v. Moore, 161 Fed. 513.....88 C. C. A. 455

Indian Treaty May 1, 1888, c. 213, 25 Stat. 124, establishing the Blackfeet Indian reservation, with the middle of the channel of Birch creek for its southern and southeastern boundary, which treaty was intended to promote the improvement, comfort, and welfare of the Indians, by aiding them to become self-supporting as an agricultural people, impliedly reserved to the Indians a prior right to a portion of the waters of such creek with which to irrigate the arid lands in the reservation, which right was paramount to that of persons subsequently taking up desert land claims on the public domain adjacent to the creek.

—Conrad Inv. Co. v. United States, 161 Fed. 829....88 C. C. A. 647

Under Rev. St. §§ 441, 463, 2058, 2149 (U. S. Comp. St. 1901, pp. 252, 262), the Commissioner of Indian Affairs is authorized, with the approval of the Secretary of the Interior, to cause collectors to be excluded and removed from a tribal Indian reservation on days when payments are being made to the Indians, if in his judgment the presence of collectors therein at such times is detrimental to the peace and welfare of the Indians; and this although the reservation be within a state and the Indians be the holders, under trust patents issued to them pursuant to

Digitized by Google

Act Feb. 8, 1887, c. 119, 24 Stat. 388, of allotments adjacent to the reservation, and be, therefore, citizens of the United States and the state.
—Rainbow v. Young, 161 Fed. 835.....88 C. C. A. 653

INDICTMENT AND INFORMATION.

Indictment for conspiracy, see Conspiracy, § 1.
Indictment for offenses against internal revenue laws, see Internal Revenue.

§ 1. Joinder of parties, offenses, and counts, duplicity, and election.
The offenses created by the Oleomargarine Act Aug. 2, 1886, c. 840, 24 Stat. 209 (U. S. Comp. St. 1901, p. 2228), were unknown to the common law, and are all merely statutory misdemeanors and of the same class regardless of the various penalties prescribed, and charges under its different provisions may be joined in the same indictment under Rev. St. § 1024 (U. S. Comp. St. 1901, p. 720).
—Morris v. United States, 161 Fed. 672.....88 C. C. A. 532

§ 2. Motion to quash or dismiss, and demurrer.
The practice of attacking the sufficiency of an indictment by objecting to the introduction of any evidence thereunder is not recognized in the federal courts.
—Morris v. United States, 161 Fed. 672.....88 C. C. A. 532

§ 3. Issues, proof, and variance.
The rule applied that recitals in an indictment that certain details of the offense charged were to the grand jurors unknown do not require the prosecution to prove on the trial that they were in fact so unknown, nor is the fact that a witness at the trial discloses a knowledge of such facts evidence to the contrary of such recitals.
—Jacobs v. United States, 161 Fed. 694.....88 C. C. A. 554

INFORMATION.

Criminal accusation, see Indictment and Information.

INFRINGEMENT.

Of patent, see Patents, § 5.
Of trade-mark, see Trade-Marks and Trade-Names, § 3.

INJUNCTION.

Relief against particular acts or proceedings.

Infringement of patent, see Patents, § 5.
Obstruction of waters, see Waters and Water Courses, § 2.
Unfair competition, see Trade-Marks and Trade-Names, § 3.

Review of proceedings for injunction.

Effect of transfer of cause on appeal, see Appeal and Error, § 3.

§ 1. Nature and grounds in general.
It was no defense to an injunction restraining defendant's use of a United States forest reserve as a pasture that its issuance would impose a grievous burden on him to restrain the cattle in his adjoining close, it also appearing that he could relieve himself of such burden by restoring a fence on one side thereof.
—Shannon v. United States, 160 Fed. 870.....88 C. C. A. 52

Digitized by Google

§ 2. **Preliminary and interlocutory injunctions.**
A preliminary injunction should not be granted, where the right alleged to be invaded or threatened is doubtful and uncertain on the showing made.
—St. Louis Street Flushing Mach. Co. v. Sanitary Street Flushing Mach. Co., 161 Fed. 725.....88 C. C. A. 585

IN PAIS.

Estoppel, see Estoppel, § 1.

INSANE PERSONS.

Protection of person adjudged insane in one state and sane in another pending suit in United States Court, see Courts, § 8.

INSOLVENCY.

See Bankruptcy.

INSTRUCTIONS.

In civil actions, see Trial, § 8.

INSURANCE.

§ 1. **Premiums, dues, and assessments.**
The delivery of an insurance policy which recites that the company agrees to pay the indemnity in consideration of the first annual premium of $145.45 to be actually paid in cash on or before its delivery, and that the contract shall not take effect until the delivery of the policy and the payment of the first premium, is an acknowledgment of the payment of the premium, and the delivered policy is competent evidence of that fact.
—Mutual Reserve Life Ins. Co. v. Heidel, 161 Fed. 535.....
88 C. C. A. 477

§ 2. **Forfeiture of policy for breach of promissory warranty, covenant, or condition subsequent.**
An extension of the time of payment of the first premium without a written agreement at or before the delivery of the policy, or a subsequent contract for a valuable consideration, that the insured shall make the deferred payments at specific times and that if he fails to do so the insurance shall cease, or the policy be forfeited, waives all forfeiture for nonpayment of every part of that premium.
—Mutual Reserve Life Ins. Co. v. Heidel, 161 Fed. 535.....
88 C. C. A. 477

§ 3. **Estoppel, waiver, or agreements affecting right to avoid or forfeit policy.**
An acknowledgment of the payment of the first premium conclusively estops the company from avoiding the policy for the failure of the insured to pay the first premium when due. But it does not estop it from proving by written contract made before or at the time the policy was delivered that an extension of time for the payment of a part or of all of the first premium to specific dates was given and an agreement made that, if the deferred payments were not then made, the insurance should cease, and the policy be forfeited.
—Mutual Reserve Life Ins. Co. v. Heidel, 161 Fed. 535.....
88 C. C. A. 477

Digitized by Google

§ 4. Risks and causes of loss.

Where a beneficiary in an accident policy was a United States railway mail clerk, and was killed while riding in a mail car in the performance of his duties, he was not "actually riding as a passenger in or on any regular passenger conveyance provided by a common carrier," within an accident policy insuring the person named as beneficiary under certain circumstances against loss by accident while actually riding as a passenger in or on any regular passenger conveyance.

—Wood v. General Accident Ins. Co. of Philadelphia, 160 Fed. 926.. 88 C. C. A. 108

Where a large metal tube filled with various metals and materials of an explosive and dangerous nature was exposed to the heat of a furnace on plaintiff's premises and actually exploded and injured an employé, such tube and its contents constituted an "explosive," within a warranty in an employer's liability policy insuring plaintiff that no explosives should be used on the premises.

—B. Roth Tool Co. v. New Amsterdam Casualty Co., 161 Fed. 709.. 88 C. C. A. 569

A running-down clause of a policy of marine insurance, providing that the insured will reimburse the owner for damages paid "if the ship hereby insured shall come into collision with any other ship or vessel," is intended to protect the insured only in case his ship actually herself comes into contact with the injured ship, and there is no liability thereunder where the insured ship by her suction caused another to sheer and come into collision with a third, although she was held liable in damages therefor in a suit for the collision.

—Western Transit Co. v. Brown, 161 Fed. 869.....88 C. C. A. 617

§ 5. Actions on policies.

Where an employer, on being sued for injury to an employé, vouched in an insurer on an employer's liability policy, which refused to defend because of alleged nonliability, the estoppel of the judgment recovered against the employer in such action operated mutually against both parties.

—B. Roth Tool Co. v. New Amsterdam Casualty Co., 161 Fed. 709.. 88 C. C. A. 569

Where an employer's liability policy contained a stipulation requiring notice of suit against the assured to recover damages by an employé to be immediately given to the insurer, and the latter expressly agreed to defend or settle it or otherwise satisfy the assured, the insurer's refusal to make a defense, after notice, because it disclaimed any liability for damages occasioned to the plaintiff, did not relieve the insurer from the conclusiveness of the judgment rendered in such action.

—B. Roth Tool Co. v. New Amsterdam Casualty Co., 161 Fed. 709.. 88 C. C. A. 569

Plaintiff permitted H. to use its heating furnace for experiments. H. filled a metal tube with other metals and explosive substances, sealed the tube, and placed the same in the furnace, where it was subjected to a hot fire. It exploded, injuring one of plaintiff's employés, who recovered a judgment against plaintiff on an allegation of negligence, in that plaintiff carelessly permitted such tube to be filled with metals of an explosive and dangerous nature and placed in a heating furnace, which caused it to explode, resulting in the injuries complained of. *Held*, that a judgment in favor of the servant on such issue was conclusive against plaintiff's right to recover over against an employer's liability company on a policy containing a warranty that plaintiff should not permit the use of explosives on the premises, which action the liability company defended on the ground of plaintiff's breach of such warranty.

—B. Roth Tool Co. v. New Amsterdam Casualty Co., 161 Fed. 709.. 88 C. C. A. 569

Digitized by Google

§ 6. Reinsurance.

A contract of reinsurance between two life insurance companies, by which one transfers all of its assets to the other and ceases business, thus disabling itself from performing its executory contracts with its policy holders, while the other assumes such contracts on terms agreed upon, is not binding upon such policy holders, in whose favor a right of action at once arises against their own company for breach of contract. Such a policy holder is, however, put to his election, and if he accepts the reinsurance offered he is bound by the terms of the contract between the two companies.

—Northwestern Nat. Life Ins. Co. of Minneapolis, Minn. v. Gray, 161 Fed. 488; Gray v. Northwestern Nat. Life Ins. Co. of Minneapolis, Minn., Id.....88 C. C. A. 430

Defendant, a life insurance company on the fixed premium plan, took over the assets of an assessment company under a contract by which it assumed all the liabilities of the other company, but subject to the provisions of its own articles of incorporation and by-laws, as they then existed or as they might thereafter be amended. It thereupon amended its by-laws, as affecting policies or certificates assumed, by providing that "the premium to be paid thereon by the insured shall be the single premium according to the life expectancy or single premium rate table adopted by the company at the attained age of the insured at the time of issuing or assuming such policy, * * * which single premium may be paid in any installments agreed upon or fixed by the board of directors. * * * Any excess thereof [interest], being in payment and extinguishment of the principal amount of said lien, and in the event of the death of the insured occurring at any time before a sum equal to the single premium as aforesaid, with 4½ per cent. interest per annum in advance from the date of such assumption, shall be paid in cash to this company, there shall be reserved from the face of such certificate or policy, and charged as a lien thereon, a sum equal to the unpaid portion of such single premium and interest." Plaintiff was the holder of a certificate of the reinsured company, and received from defendant a notice of the reinsurance, a copy of such by-law, and a new policy, with a statement of the amount of the lien thereon, and giving him the option to pay the same in cash or to pay certain bimonthly installments, which, however, were less than the accumulating interest, so that, although the installments were paid, the lien constantly increased, and the value of the policy diminished. Plaintiff paid such installments until the maturity of his policy. *Held*, that he must be presumed to have known his legal rights, and that by accepting the policy and making the payments thereunder he became bound by its terms.

—Northwestern Nat. Life Ins. Co. of Minneapolis, Minn. v. Gray, 161 Fed. 488; Gray v. Northwestern Nat. Life Ins. Co. of Minneapolis, Minn., Id.....88 C. C. A. 430

INTENT.

Criminal, see Criminal Law, § 1.

INTEREST.

On award or judgment in condemnation proceedings, see Eminent Domain, § 1.

INTERIOR DEPARTMENT.

See Public Lands, § 2.

Digitized by Google

INTERLOCUTORY INJUNCTION.

See Injunction, § 2.

INTERLOCUTORY JUDGMENT.

Appealability, see Appeal and Error, § 1.

INTERNAL REVENUE.

Legacy taxes under War Revenue Act June 13, 1898, c. 448, §§ 29, 30, 30 Stat. 464, 465, as amended by Act March 2, 1901, c. 806, §§ 10, 11, 31 Stat. 946, 948 (U. S. Comp. St. 1901, pp. 2307, 2308), which were made due and payable one year after the death of the testator, are not collectible on the estates of persons who died within one year prior to July 1, 1902, at which time the repeal of said section 29 took effect (Act April 12, 1902, c. 500, § 7, 32 Stat. 97 [U. S. Comp. St. Supp. 1907, p. 649]).
—McCoach v. Bamberger, 161 Fed. 90.....88 C. C. A. 254

Rev. St. § 3244 [U. S. Comp. St. 1901, p. 2096], defines a wholesale liquor dealer to be a person who sells or offers for sale foreign or domestic distilled spirits or wines in quantities not less than five wine gallons at a time. *Held* that, where an indictment charged defendant as a wholesale liquor dealer with sending out two casks of distilled spirits without making the required entries in his record book, required to be kept by section 3318 [page 2164] the indictment sufficiently charged that the casks contained each not less than five wine gallons.
—Williams v. United States, 158 Fed. 30.....88 C. C. A. 296

Rev. St. § 3318 [U. S. Comp. St. 1901, p. 2164], requires every wholesale liquor dealer at the time of sending out any spirits to enter in his record book the day when and the name and place of business of the person or firm to whom such spirits are to be sent, the quantity and kind or quality of such spirits, the number of gallons, the name of the distiller, and the serial number of the package. *Held* that, the gist of the offense being the sending out of any spirits without complying with the section, the quantity sent out was not an essential element thereof, so that an indictment charging that defendant, a wholesale liquor dealer, sent out of his stock two casks of distilled spirits, without making the required record entries, was not fatally defective in failing to specify the quantity shipped.
—Williams v. United States, 158 Fed. 30.....88 C. C. A. 296

Since a plea of not guilty puts in issue every fact essential to constitute the offense charged, and the benefit of reasonable doubt in favor of accused extends to every matter offered in evidence for as well as against him, an instruction, in a prosecution of a wholesale liquor dealer for violating the internal revenue law in failing to make proper records of sales, that it was incumbent on defendant to show that he made the entries in a book prescribed by the internal revenue department, or that he made them on a sheet of paper, etc., was erroneous.
—Williams v. United States, 158 Fed. 30.....88 C. C. A. 296

The indictment was also not objectionable for failure to specify the name of the consignee or the place where the casks were sent; such specifications being mere matters of evidence of which defendant could have secured information by demanding a bill of particulars.
—Williams v. United States, 158 Fed. 30.....88 C. C. A. 296

Accused was indicted for willfully and unlawfully refusing and neglecting to make in his record book, kept as a wholesale liquor dealer, any entry or entries concerning two particular casks of spirits at the time they were sent out. The court charged that if defendant failed or neglected to pro-

Digitized by Google

vide a book in such form as prescribed by the Commissioner of Internal Revenue, and sold as a wholesale liquor dealer any kind of distilled spirits, and at the time of sending out of his stock and possession any of such spirits, and before the same were removed from his premises, to enter in such book the date when and the name and place of business of the person or firm to whom such spirits were to be sent, the kind and quantity of such spirits, he was guilty as charged. In another paragraph the court stated that if defendant in good faith went to the deputy revenue collector for the district and requested instruction as to the keeping of his records, and was instructed to keep them on a sheet of paper until he could procure the prescribed form book, and he in good faith relied on such instructions and so kept his record, he was not guilty. *Held*, that accused by the latter instruction received the full benefit of his claim of good faith, and could not complain of any contradiction in such instructions.

—Williams v. United States, 158 Fed. 30.....88 C. C. A. 296

The term "cask" is generally understood to be a receptacle for liquids, either larger or smaller than the usual barrel, and, as employed in the statute respecting the manufacture and sale of spirituous liquors, pertaining to wholesale dealers, has a well-recognized import as a vessel containing not less than 20, 10, or 5 gallons wine measure, as provided by Rev. St. §§ 3287, 3323, 3244 [U. S. Comp. St. 1901, pp. 2130, 2167, 2096].

—Williams v. United States, 158 Fed. 30.....88 C. C. A. 296

An indictment for using for packing oleomargarine stamped packages which had previously contained oleomargarine in violation of section 13 of the oleomargarine act of August 2, 1886, c. 840, 24 Stat. 211 (U. S. Comp. St. 1901, p. 2232), which prohibits such use, and provides that "any person who fraudulently gives away or accepts from another, or who sells, buys or uses for packing oleomargarine any such stamped package," shall be guilty of a criminal offense is good, at least after verdict, although it does not charge that such packages were "fraudulently" used.

—Morris v. United States, 161 Fed. 672.....88 C. C. A. 532

An indictment for a violation of section 6 of the oleomargarine act of August 2, 1886, c. 840, 24 Stat. 210 (U. S. Comp. St. 1901, p. 2230), by packing oleomargarine in packages which had previously been used for that purpose considered, and *held* sufficient.

—Morris v. United States, 161 Fed. 672.....88 C. C. A. 532

An indictment in the language of section 4 of the oleomargarine act of August 2, 1886, c. 840, 24 Stat. 209 (U. S. Comp. St. 1901, p. 2229), charging that the defendant at a certain time and place did unlawfully "carry on the business of a manufacturer of oleomargarine without having first then and there paid the special tax therefor as required by law," states all the elements of the offense and is sufficiently specific in the absence of a motion for a bill of particulars showing whether the defendant is charged with being a manufacturer in the ordinary sense under the original act or as defined in the amendment of May 9, 1902, c. 784, § 2, 32 Stat. 194 (U. S. Comp. St. Supp. 1907, p. 636).

—Morris v. United States, 161 Fed. 672.....88 C. C. A. 532

An indictment for carrying on the business of a manufacturer of oleomargarine without having paid the special tax therefor, based on the amendment to section 3 of the oleomargarine act added by Act May 9, 1902, c. 784, § 2, 32 Stat. 194 (U. S. Comp. St. Supp. 1907, p. 636), which provides that any person that sells, vends, or furnishes oleomargarine for the use and consumption of others "except to his own family table without compensation," and who shall color the same to resemble butter, shall be deemed a manufacturer, need not negative such exception which is in fact mere surplusage, since it does not exempt from the operation of the statute anything which would otherwise be within it.

—Morris v. United States, 161 Fed. 672.....88 C. C. A. 532

In a prosecution for carrying on a business without having paid the internal revenue tax required by statute it is sufficient for the govern-

Digitized by Google

ment to prove that defendant carried on the business at a certain time and place and payment of the tax is a matter of defense, which if relied on must be proved by defendant.
—Morris v. United States, 161 Fed. 672.....88 C. C. A. 532

INTERSTATE COMMERCE.

Regulation, see Carriers, § 1.

INTOXICATING LIQUORS.

Internal revenue taxes, see Internal Revenue.

INVENTION.

See Patents.

ISSUES.

In criminal prosecutions, see Indictment and Information, § 3.

JEOPARDY.

Former jeopardy bar to prosecution, see Criminal Law, § 2.

JOINDER.

Of offenses in indictment, see Indictment and Information, § 1.

JUDGES.

See Courts.

JUDGMENT.

Enforcement by creditors' suit, see Creditors' Suit.
Mandamus to compel record of, see Mandamus, § 1.
Sales under judgment, see Judicial Sales.

In particular civil actions or proceedings.

See Trover and Conversion, § 1.
On appeal or writ of error, see Appeal and Error, § 8.
To set aside tax title, see Taxation, § 2.

Review.

See Appeal and Error.

§ 1. Construction and operation in general.
Where a decree is general in its terms, an opinion filed by the court may be taken into consideration for the purpose of determining definitely what questions were presented and decided.
—D'Arcy v. Staples & Hanford Co., 161 Fed. 733....88 C. C. A. 606

§ 2. Conclusiveness of adjudication.
The judgment of a federal court in a mandamus suit brought by a coal company operating mines on the line of a railroad against the railroad

Digitized by Google

company to compel a fair distribution of cars, upon an allegation of discrimination in violation of the interstate commerce law, does not inure to the benefit of any other operator not a party to the suit, nor bar an independent suit or proceeding by such operator on its own behalf in court or before the Interstate Commerce Commission to secure similar relief; nor is it estopped to maintain such independent suit or proceeding by the fact that it aided the relator in the prior suit or contributed to the expense thereof.

—Merchants' Coal Co. v. Fairmont Coal Co., 160 Fed. 769..... 88 C. C. A. 23

§ 3. Foreign judgments.

A decree in ancillary administration proceedings in the United States Commissioners' Court at Nome that no partnership existed between decedent and a judgment debtor was not conclusive against complainant's right to pursue assets in the hands of distributees of such decedent within the jurisdiction of the federal Circuit Court for the District of Washington by a creditor's bill filed in such court, on the ground that a partnership in fact existed.

—Feidler v. Bartleson, 161 Fed. 30.....88 C. C. A. 194

§ 4. Pleading and evidence of judgment as estoppel or defense.

On the question whether the issues in a prior action by a servant against his master for injuries, in which judgment was rendered for the servant, were the same as those in an action by the master against an employer's liability company, to recover over against the latter, in which the judgment against the master was claimed to be res judicata, the pleadings, instructions, and verdict in the prior action were admissible to determine what was actually tried therein.

—B. Roth Tool Co. v. New Amsterdam Casualty Co., 161 Fed. 709.. 88 C. C. A. 569

JUDICIAL SALES.

On foreclosure of tax lien, see Taxation, § 1.

A court has power to vacate an order of confirmation of a judicial sale at the same term at which it was rendered.

—Indiana & Arkansas Lumber & Mfg. Co. v. Milburn, 161 Fed. 531 88 C. C. A. 473

JURISDICTION.

Jurisdiction of particular actions or proceedings.

For causing death, see Death, § 1.

Special jurisdictions and jurisdictions of particular classes of courts.

See Admiralty, § 1; Bankruptcy, § 2; Courts; Equity, § 1.

JURY.

Instructions in civil actions, see Trial, § 3.
Questions for jury in civil actions, see Trial, § 2.
Taking case or question from jury at trial, see Trial, § 2.

§ 1. Competency of jurors, challenges, and objections.

Under sections 2240 and 2247, Mansf. Dig. (Ind. T. Ann. St. 1899, §§ 1583, 1590), defendants tried together for a misdemeanor are entitled to but three challenges, and the challenge of any one of them must be counted against all.

—Wilcox v. United States, 161 Fed. 109.....88 C. C. A. 273

Digitized by Google

Rev. St. § 812 (U. S. Comp. St. 1901, p. 627), which provides that "no person shall be summoned as a juror in any Circuit or District Court more than once in two years and it shall be sufficient cause of challenge to any juror called to be sworn in any case that he has been summoned and attended said court as juror at any term of said court held within two years prior to the time of such challenge" as modified by Act June 30, 1879, c. 52, § 2, 21 Stat. 43 (U. S. Comp. St. 1901, p. 624), by reducing the time to one year, prescribes the rule of procedure in the federal courts to the exclusion of any state statute or rule, and under such provisions it is not ground of challenge to a juror that he has served as a juror within one year unless it was in the same court.
—Morris v. United States, 161 Fed. 672 .....88 C. C. A. 532

KNOWLEDGE.

As affecting assumption of risk by servant, see Master and Servant, § 2.

LANDLORD AND TENANT.

Right of landlord to priority of payment from proceeds of sale of bankrupt's property, see Bankruptcy, § 2.

§ 1. Terms for years.
A lease for a room in a six-story building provided that, if the "building or premises wherein said demised premises are contained" should be destroyed by fire or so badly injured that they could not be repaired within sixty days, the lease should terminate; but if said premises, "having been injured as aforesaid," should be repairable within 60 days, the lessor should repair with all reasonable speed, and the rent should cease during the time of making the repairs, and that, if so slightly injured as not to be rendered unfit for occupancy, they should be repaired and the rent should not cease. *Held*, that such provisions applied to the entire building, and that, on an injury to the building by fire which could not be repaired within 60 days, the lessor was entitled to terminate the lease, although the demised portion was only slightly injured, and not rendered unfit for occupancy.
—Levy v. Equitable Life Assur. Society, 161 Fed. 283.....
88 C. C. A. 329

LAND OFFICE.

See Public Lands, § 2.

LANDS.

See Public Lands.
Of Indians, see Indians.

LEASES.

See Landlord and Tenant.

LEGACY TAX.

See Internal Revenue.

LETTERS PATENT.

For inventions, see Patents.

Digitized by Google

LIBEL AND SLANDER.

§ 1. Actions.

A complaint in an action for libel, which sets out the alleged libelous publication, is not demurrable, although it does not allege special damages, unless the words used are incapable of any reasonable construction which will make them defamatory.

—Chanler v. Town Topics Pub. Co., 161 Fed. 105.....88 C. C. A. 269

LIENS.

Effect of proceedings in bankruptcy, see Bankruptcy, § 2.
On mining property, see Mines and Minerals, § 2.

Particular classes of liens.

See Maritime Liens.
Mortgage, see Mortgages, § 1.
Railroad liens, see Railroads, § 1.
Tax liens, see Taxation, § 1.

LIFE INSURANCE.

See Insurance, § 6.

LIMITATION.

Of claim of patent, see Patents, § 3.

LIMITATION OF ACTIONS.

Limitations in suit to try tax titles, see Taxation, § 2.

§ 1. Computation of period of limitation.

Defendant railroad company built dikes along the bank of a river to prevent the current from washing away its roadbed. They were constructed by driving rows of large piles from five to seven feet into the earth, seven feet apart, planking between, and filling in with stone. The effect of such dikes was to deflect the current of the river against plaintiff's land on the opposite bank, portions of which were thereafter constantly being undermined and destroyed. *Held*, that the dikes were permanent structures, and that the damages for injury to plaintiff's land, both present and prospective, were recoverable in a single action, the right to bring which accrued at once when the dikes were completed and the injury commenced, and was barred in three years thereafter, under Mansf. Dig. Ark. § 4478 (Ind. T. Ann. St. 1899, § 2945), limiting the time for bringing actions for trespass upon lands.

—Gulf, C. & S. F. Ry. Co. v. Moseley, 161 Fed. 72....88 C. C. A. 236

LIS PENDENS.

Pendency of other action ground for abatement, see Abatement and Revival, § 1.

LITTORAL RIGHTS.

See Navigable Waters, § 2.

Digitized by Google

LOCATION.

Of mining claim, see Mines and Minerals, § 1.

LOGS AND LOGGING.

Assignment of contract to cut timber, see Assignments, § 1.
Options to purchase timber, see Sales, § 1.

MACHINERY.

Dangerous machinery, see Negligence, § 1.
Liability of employer for defects, see Master and Servant, § 2.
Production and use of steam, see Steam.

MAIL.

See Post Office, § 1.

MANDAMUS.

Persons concluded by judgment in mandamus, see Judgment, § 2.

§ 1. **Subjects and purposes of relief.**
The duty of the registrar of conveyances in Hawaii to record a judgment of condemnation in condemnation proceedings, and a subsequent deed acquired by plaintiff from the owners to complete its title, being ministerial, an application for a writ of mandamus to compel him to perform that duty will lie as an ancillary proceeding to carry out of the objects of the main case in eminent domain and to give complete relief.
—United States v. Merriam, 161 Fed. 303.....88 C. C. A. 349

MANDATE.

See Mandamus.

MARINE INSURANCE.

See Insurance, § 4.

MARITIME LIENS.

§ 1. **Nature, grounds, and subject-matter in general.**
While there may be a maritime lien for services rendered to a vessel, either foreign or domestic, and there may be a presumption that such services were rendered on the credit of the vessel such as in case of salvage or pilotage services, whether such presumption arises, or whether the lien exists, depends on the nature of the services and the circumstances under which they are rendered.
—The Alligator, 161 Fed. 37; The Alligrippus, Id.; The Phœnix, Id. .....88 C. C. A. 201

A maritime lien does not attach for a supposed credit given to a vessel unless the service or supplies are clearly shown to have been rendered or furnished to the particular vessel to which the credit is given.
—The Alligator, 161 Fed. 37; The Alligrippus, Id.: The Phœnix, Id. .....88 C. C. A. 201

Digitized by Google

The owner of a tug which was verbally hired by the day by the owner of three dredges to "wait upon" such dredges while engaged on certain work, the services rendered being the carrying of coal and water to the dredges, the towing of scows and of the dredges themselves when necessary is not entitled to a maritime lien on all or any of such dredges for a balance due on the contract which was not one for ordinary towage services to the vessels themselves.

—The Alligator, 161 Fed. 37; The Alligrippus, Id.; The Phœnix, Id. .....88 C. C. A. 201

§ 2. **Enforcement.**

Although the admiralty courts will take judicial notice of state statutes creating liens they will not undertake to adjudicate rights thereunder in the absence of the allegations and proofs necessary to an issue and controversy in that behalf.

—The Alligator, 161 Fed. 37; The Alligrippus, Id.; The Phœnix, Id. .....88 C. C. A. 201

MASTER AND SERVANT.

Employer's liability insurance, see Insurance, § 5.
Evidence of judgment as estoppel or defense in action for injuries to servant, see Judgment, § 4.
Questions presented for review in action for injuries to servant, see Appeal and Error, § 5.

§ 1. **The relation.**

There is an implied, if not an expressed, condition in a contract of employment that it was made with some regard to the known capabilities of the employé, and such condition is to be taken into consideration in determining whether or not a service required of him is reasonable.

—Development Co. of America v. King, 161 Fed. 91....88 C. C. A. 255

The refusal of a servant to obey an order of the master does not afford legal ground for his discharge unless such order was reasonable, and that question is one of fact for the jury, although the contract is in writing and requires him to perform such services as the master may direct, and the order is also in writing.

—Development Co. of America v. King, 161 Fed. 91....88 C. C. A. 255

A servant is bound to obey all lawful and reasonable orders of the master, and the motive of the master in giving such orders is immaterial.

—Development Co. of America v. King, 161 Fed. 91....88 C. C. A. 255

§ 2. **Master's liability for injuries to servant.**

Evidence that after an accident a master employed more men, repaired his machinery, or adopted a different method in the conduct of his business, is inadmissible to prove his negligence at the time of the accident.

—Lake v. Shenango Furnace Co., 160 Fed. 887.....88 C. C. A. 69

The deceased and two fellow servants had been operating a hand hoist and lowering timber with it into the shaft of a mine for about a month, when the master directed him to operate it with one co-workman, and he did so without objection. The hoist consisted of a chain attached to a rope which ran over a pulley suspended to a tripod above the shaft, and the other end of the rope was attached to a drum by which the rope was wound up by the use of adjustable cranks on the ends of the drum, and the descent of the load was controlled by a friction brake applied to the drum by a lever. After the chain was fastened around the load, it was necessary to wind the rope up until it was taut, and to apply the brake upon a signal from the chainman before the load slid or swung into the shaft, because it was so heavy that the workmen could not hold it up with the cranks. After six or seven loads had been safely lowered by the two men,

Digitized by Google

the deceased, who was acting as chainman, directed his fellow workman to continue to wind up the rope so long that it slid the load into the shaft before the brake was applied. *Held*, the deceased assumed the risk of operating the machine in this way with but one assistant.

—Lake v. Shenango Furnace Co., 160 Fed. 887.....88 C. C. A. 69

Plaintiff and two others engaged in taking down certain machinery were ordered by their foreman to roll a five-inch rim fly wheel, weighing between 1,800 and 2,200 pounds, to a point where it could be hoisted from a basement. Plaintiff and his fellow workmen were intelligent, and made no complaint that the number of men allotted was insufficient to do the work, but proceeded to roll the wheel on the concrete floor until the wheel encountered the raised surface of a water pipe partially buried in the floor, when the lower part of the wheel slid laterally along the pipe and fell on plaintiff's leg, causing the injuries complained of. The surface of the floor was exposed when they began work, and the partially buried pipe was plainly observable until it was covered with water and grease that came from the machine they were dismantling. *Held*, that the neglect of plaintiff and his fellow servants rather than the lack of sufficient men to perform the work, was the proximate cause of his injury, and that defendant was not negligent in failing to provide a sufficient number of workmen.

—Fairbanks, Morse & Co. v. Walker, 160 Fed. 896....88 C. C. A. 78

While employés are entitled to rely on the performance by the employer of his positive duties to them, the employer is also entitled to presume that the employés will exercise ordinary care in doing their work; neither being required to anticipate or make provision for the other's default.

—Fairbanks, Morse & Co. v. Walker, 160 Fed. 896....88 C. C. A. 78

Where defendant was engaged in taking down and removing machinery from premises which did not belong to it, and such work was not usually performed there, the ordinary rule as to an employer's duty to furnish a safe place to work did not apply as between defendant and its servants engaged in such work.

—Fairbanks, Morse & Co. v. Walker, 160 Fed. 896....88 C. C. A. 78

The rules of a railroad company provided that "a signal imperfectly displayed, or the absence of a signal where a signal is usually shown, must be regarded as a stop signal"; that "in all cases of doubt or uncertainty the safe course must be taken and no risks run"; and that "firemen as well as enginemen must watch signals as well as switches carefully, as frequently the first view can be had from the firemen's side." Plaintiff, who was a fireman on a passenger train of such company, on approaching a station at night, at which the train did not stop, observed when from one-half of a mile to a mile distant that there was no light displayed at a switch stand on the engineer's side of the track where there should be a light. He also saw near the station the engine of a freight train facing him with the headlight hooded, as required by the rules when such train was out of the way of an approaching train. He claimed also that some one at or near the station gave a "high ball" signal by moving a lantern up and down, which indicated "proceed" under the rules. The giving of any such signal was denied by the crew of the freight train, and was not authorized by the rules to be given to a train approaching a station. Plaintiff took no action whatever, and did not communicate what he had seen to the engineer, and the train passed upon a siding through the switch, which was open, and ran into a section of the freight train, and in the collision the engineer was killed and plaintiff injured. *Held*, that in failing to act on the absence of a light at the switch, which under their rules was a stop signal, plaintiff was guilty of contributory negligence, which precluded his recovery from the company; that he was not relieved from such charge by the unauthorized high ball signal, if given, nor by the fact that it was also the duty of the engineer to see and obey the stop signal.

—Missouri, K. & T. Ry. Co. v. Collier, 157 Fed. 347..88 C. C. A. 127

Digitized by Google

It is settled law that a railroad company may make reasonable rules for the government of its employés in the operation of trains, and an act of one employé, unauthorized by, or contrary to, such rules cannot justify another employé in disregarding an established rule, nor relieve him from the charge of contributory negligence, where his disregard of such known rule results in, or contributes to, his injury.

—Missouri, K. & T. Ry. Co. v. Collier, 157 Fed. 347..88 C. C. A. 127

Plaintiff, a locomotive fireman, was injured by his locomotive running onto a siding through a switch that had been left open. The absence of a light at the switch showed that the switch was open. *Held*, that the proximate cause of the wreck and the consequent injury to plaintiff was not the absence of the light from the switch, but the fact that the switch was improperly open, the responsibility for which was a question of fact in issue.

—Missouri, K. & T. Ry. Co. v. Collier, 157 Fed. 347..88 C. C. A. 127

Under the Kansas employer's liability act (Gen. St. Kan. 1889, § 1251), which as construed by the Supreme Court of the state relieves railroad employés, more or less exposed by their employment to the hazards of railroading, from the common-law rule of assumed risk from negligence of fellow servants, such an employé, injured or killed in a collision between trains while being carried by the company to or from his place of work as required under his contract of employment, stands in the same relation to the company as a passenger, and the happening of the collision is prima facie evidence of the company's negligence, and casts upon it the burden of proof.

—Missouri Pac. Ry. Co. v. Larussi, 161 Fed. 66....88 C. C. A. 230

Recovery for the death of a car repairer knocked down and killed by cars being shunted against a car while he was testing part of its coupler is precluded on the ground of contributory negligence, where, when the accident occurred, he was violating a rule that, when cars were being shunted, work should not be done upon cars without first obtaining permission of the foreman of the yard to put up a flag to indicate the workman's presence under or about the car; decedent having known that shunting was being done, and it not appearing that the rule had been previously violated.

—Elliott v. Canadian Pacific Ry. Co., 161 Fed. 250..88 C. C. A. 286

Where, in an action against a railroad company to recover for the death of an employé, alleged to have resulted from a defect in the car upon which he was riding, the defendant relies upon its printed rules as imposing the duty of inspection upon the deceased under the circumstances, such rules must be strictly construed against the company when their language leaves the matter in doubt.

—Southern Ry. Co. v. Hopkins, 161 Fed. 266.....88 C. C. A. 312

A custom of a railroad company, known to its employés, to inspect cars only in its yards, will not relieve it from liability for an injury to a conductor in its employ caused by a defect in a car which he was sent at night to bring to the yards from a manufacturing plant, unless the defect was so obvious that the failure of the conductor to observe it constituted contributory negligence.

—Southern Ry. Co. v. Hopkins, 161 Fed. 266.....88 C. C. A. 312

In determining whether a servant assumed the risk of injury incident to the use of a boiler negligently permitted by the master to become unfit and unsafe for use, the true test is, not whether the servant exercised care to discover dangers, but whether they were known to him, or were so patent as to be readily observable by him.

—Chicago Great Western Ry. Co. v. McDonough, 161 Fed. 657.....
88 C. C. A. 517

Rev. St. Mo. 1899, §§ 6433, 6434 (Ann. St. 1906, pp. 3217, 3218), requiring dangerous machinery in factories to be guarded, and prohibiting the employment of minors or women to work between the fixed or traversing

Digitized by Google

part of any machine while in motion by action of mechanical power, does not deprive the master of the defense of assumed risk in an action for injuries to an employé by the master's alleged violation of such sections.
—Federal Lead Co. v. Swyers, 161 Fed. 687.....88 C. C. A. 547

Where a servant was between 19 and 20 years old, sound in body and mind, at the time he was injured, and possessed of the knowledge and experience of an adult, he was chargeable with the consequence of such knowledge, and the fact that he was under 21 years of age was not material in determining whether he assumed the risk of the dangers he involuntarily encountered in the operation of defendant's machinery.
—Federal Lead Co. v. Swyers, 161 Fed. 687.....88 C. C. A. 547

Rev. St. Mo. 1899, § 4151 (Ann. St. 1906, p. 2250), declares that the common law of England and all statutes and acts of Parliament made prior to the fourth year of the reign of James I, of a general nature and not local to the kingdom, nor repugnant to or inconsistent with the Constitution of the United States and of the state of Missouri, or the statutes of that state, shall be the rule of action and decision in that state, any law or custom of usage to the contrary notwithstanding. *Held*, that such section was sufficient to make the doctrine of assumed risk in an action against a master for injuries to a servant applicable as a part of the common law of Missouri, though such doctrine first received judicial utterance in 1837, the principle having existed prior to the reign of James I.
—Federal Lead Co. v. Swyers, 161 Fed. 687.....88 C. C. A. 547

Plaintiff, when injured, was between 19 and 20 years old, sound in body and mind, and had been in defendant's service for 13 months, performing the same duties, which consisted in part of mounting a platform near the roof of defendant's factory and oiling the boxes of a shaft, soaping a belt running over a pulley, and tending to the machinery operated there. On the shaft two pulleys were keyed, over one of which a sprocket chain was operated, and just beyond the shaft and substantially parallel with it was a cable. Plaintiff, while on the platform attending to his duties of oiling the machinery and soaping the belt, undertook to restore the cable, which had worked off the sheave, and in doing so reached over the shaft. His feet slipped on the platform, and in some way he was caught by the revolving shaft or pulleys and injured. Plaintiff was familiar with the situation, and during his entire employment had been on the platform several times every day. He appreciated the danger of replacing the cable while standing on the platform, and took precautions to prevent falling by reason of the slippery condition of the platform, or being entangled in the shaft or pulleys while reaching over them. *Held*, that plaintiff assumed the risk.
—Federal Lead Co. v. Swyers, 161 Fed. 687.....88 C. C. A. 547

Plaintiff, a servant, was injured by the fall of a derrick, the mast of which was insecurely bolted to the bedplate. Such defect was plainly observable, and plaintiff, who had worked with the derrick for two or three months, had actual knowledge thereof, and that the derrick had been condemned by defendant as unsafe, after which plaintiff had participated in its restoration to use in its defective condition and continued to work with it without objection until it fell. *Held*, that plaintiff assumed the risk of injury therefrom.
—Wollington v. Missouri, K. & T. Ry. Co., 161 Fed. 713.....
88 C. C. A. 573

The act of a member of a railroad switching crew in giving a signal to the engineer to push a coal car forward while plaintiff, the foreman of the crew, was in a place of danger between the cars endeavoring to adjust the automatic coupler, was negligence of plaintiff's fellow servant, for which no recovery could be had under the laws of Wyoming.
—Union Pac. R. Co. v. Brady, 161 Fed. 719.....88 C. C. A. 579

In an action for injuries to the foreman of a switching crew by his hand being crushed between the parts of an automatic coupler, evidence *held* insufficient to show that the coupler was defective.
—Union Pac. R. Co. v. Brady, 161 Fed. 719.....88 C. C. A. 579

Digitized by Google

Where plaintiff, the foreman of a switching crew, discovered that the automatic couplers on the ends of two cars sought to be coupled would not work by means of the lever on the side of one of the cars, it was plaintiff's duty to cross over and use the lever on the other car to operate the coupler, instead of attempting to do so by hand, and it was no excuse for his failure so to do that it was dangerous to cross between the cars to the other side of the track; the cars being stationary and the switch engine attached to those which were to be moved up to make the coupling being subject to his orders.

—Union Pac. R. Co. v. Brady, 161 Fed. 719.....88 C. C. A. 579

§ 3. Liabilities for injuries to third persons.

Where the servants of a contractor for the erection of an addition to defendant's car shops had been accustomed to use the runway of a traveling crane in the mill to move scaffolding from one truss to another, which method of work had been pursued in the presence of defendant's superintendent, without objection, it would be considered as having been followed with defendant's express permission.

—Standard Steel Car Co. v. McGuire, 161 Fed. 527..88 C. C. A. 469

MASTERS IN CHANCERY.

See Equity, § 5.

MEASURE OF DAMAGES.

For wrongful death, see Death, § 1.

MECHANICS' LIENS.

On mining property, see Mines and Minerals, § 2.

MENTAL SUFFERING.

As element of damage, see Damages, § 1.

MINES AND MINERALS.

§ 1. Public mineral lands.

If plaintiff's location of a placer mining claim on May 25th, unaccompanied by discovery at the time, gave him no right to return June 9th, after an absence to procure supplies, etc., and after defendant had made due location of the claim and taken possession for the purpose of exploration, defendant's remedy was to protect his possession against plaintiff's entry; and, plaintiff having re-entered peaceably and both being in possession by common consent after June 8th, it became a race of diligence between them to discover gold, and he who first discovered it obtained the prior right. His discovery did not relate back to the date of his location; but his location was made valid by discovery, and took effect from that date, and it gave him the full right to the claim, to the exclusion of all others.

—Johanson v. White, 160 Fed. 901.....88 C. C. A. 83

§ 2. Operation of mines, quarries, and wells.

Civ. Code Alaska, §§ 262, 263, and 265, provide, inter alia, for a laborer's lien for work done on a mine at the instance of the owner or his agent: that any person having charge of the work shall de deemed his agent: that in case the work is done for a lessee without the lessor's knowledge,

Digitized by Google

the lien shall extend only to the leasehold interest, but the owner's interest shall be subject to a lien for any work done thereon with his knowledge unless he shall give notice that he will not be responsible within three days after he obtains such knowledge. *Held*, that the lien given by such sections, construed together, extends to and binds the interest of the owner of a mining claim for improvements made thereon under direction of a lessee with the owner's knowledge and in the absence of any disclaimer of responsibility by him.
—Cascaden v. Wimbish, 161 Fed. 241.....88 C. C. A. 277

Where men were hired to work in making improvements on a mining claim at a certain sum per day and their board, one who devoted a part of his time to cooking for himself and the others is entitled equally with the others to a mechanic's lien for his wages.
—Cascaden v. Wimbish, 161 Fed. 241.....88 C. C. A. 277

Work done in cleaning up and washing gold taken from a mining claim is "labor done upon the claim," for which the workmen are entitled to a lien under Civ. Code Alaska, § 262.
—Cascaden v. Wimbish, 161 Fed. 241.....88 C. C. A. 277

In a suit against the owner of a mining claim to establish a laborer's lien thereon for work done at the instance of lessees, such lessees are not necessary parties, and it was within the discretion of the court to refuse to permit the filing of an amended answer setting up their nonjoinder as a defense, after the case was ready for trial, and after such lessees had left the jurisdiction of the court.
—Cascaden v. Wimbish, 161 Fed. 241.....88 C. C. A. 277

MODIFICATION.

Of contract, see Contracts, § 2.

MONEY ORDERS.

See Post Office, § 1.

MONEY RECEIVED.

Plaintiffs wrongfully converted certain cattle, which they afterwards surrendered to a bank claiming a right to them, and which caused them to be sold. Defendant claiming a mortgage on the cattle, demanded them from plaintiffs, who stated that they had turned them over to the bank and disclaimed any interest therein. The bank then also disclaiming any interest, the proceeds of the cattle were paid over to defendant. Subsequently a third party recovered a judgment for the conversion against plaintiffs, which they paid. *Held* that, the money having been received under claim of right, there was no promise on the part of defendant implied from the transaction which would support an action against it by plaintiffs for money had and received to their use.
—Third Nat. Bank v. Rice, 161 Fed. 322.....88 C. C. A. 640

MORTGAGES.

By corporations, see Corporations, § 3.
Of railroads, see Railroads, § 1.

§ 1. Construction and operation.
The failure of a mortgagee of property in Alaska to ascertain the fact of an attachment lien thereon before taking a renewal mortgage, or to

Digitized by Google

make the attachment creditor a party to the suit to foreclose the same, was not such laches as to debar it from the right to relief by a reinstatement of the original mortgage as against such lien, where no prejudice resulted to the holder thereof.

—Griffin v. International Trust Co., 161 Fed. 48....88 C. C. A. 212

MOTIONS.

Review of discretionary rulings on, see Appeal and Error, § 7.

For particular purposes or relief.

Continuance in civil actions, see Continuance.
Quashing indictment or information, see Indictment and Information, § 2.
Striking out evidence, see Trial, § 1.

MULTIFARIOUSNESS.

In pleading in equity, see Equity, § 3.

MUNICIPAL CORPORATIONS.

See Counties.

§ 1. Use and regulation of public places, property, and works.

Where a passenger, riding on the running board of a street car, was struck by the shaft of an express wagon standing against the curb, the owner of the wagon was negligent in not exercising due care in placing the wagon and securing the horse; plaintiff being entitled to assume that such care had been taken as to prevent the shafts of the wagon projecting over the running board of street cars.

—United States Express Co. v. Kraft, 161 Fed. 300..88 C. C. A. 346

In an action for injuries to plaintiff by being struck by the shafts of an express wagon standing against the curb and extending into the street, as plaintiff was riding on the running board of a street car, evidence *held* to require submission of the question of plaintiff's contributory negligence to the jury.

—United States Express Co. v. Kraft, 161 Fed. 300..88 C. C. A. 346

Plaintiff, while riding on the running board of a street car, was injured by coming in contact with an express wagon backed against the curb. The court charged that every one was called on to exercise the best judgment he could by using his eyes and senses to keep out of danger; that if plaintiff could see the obstruction in the street when he was getting on the car, or while the car was moving, he should have avoided putting himself in a place of danger, and if the accident was really plaintiff's fault, because he put himself in a place of danger, he could not recover; but that, in order to entitle plaintiff to recover, the jury must find, not only that defendant was negligent, but that plaintiff was not negligent. *Held*, that such instruction presented the question of contributory negligence to the jury in as favorable a manner to defendant as it had a right to expect.

—United States Express Co. v. Kraft, 161 Fed. 300..88 C. C. A. 346

NAMES.

See Trade-Marks and Trade-Names.

Digitized by Google

NAVIGABLE WATERS.

See Waters and Water Courses; Wharves.

§ 1. Lands under water.

Under Act May 14, 1898, c. 299, 30 Stat. 409 (U. S. Comp. St. 1901, p. 1412), extending the homestead laws to Alaska, which expressly provides that nothing therein contained shall be so construed as to authorize entries to be made, or title to be acquired to the shore of any navigable waters, a location of land on a shore under the soldiers' additional homestead scrip act does not give the proprietor any right in the land lying below the line of ordinary high tide.
—Columbia Canning Co. v. Hampton, 161 Fed. 60....88 C. C. A. 224

§ 2. Riparian and littoral rights.

While the owner or locator of lands in Alaska which border on navigable or tidal waters has under the general law the right of access to such waters for the purpose of navigation, he has no right or title in the soil below high-water mark, and no right of possession which will support an action against an intruder for interfering with or obstructing him in the erection and use of a structure upon the shore below such high-water mark, unless it prevents or obstructs his access to the navigable waters.
—Columbia Canning Co. v. Hampton, 161 Fed. 60....88 C. C. A. 224

NEGLIGENCE.

Causing death, see Death, § 1.

By particular classes of persons.

See Railroads, § 3.
Employers, see Master and Servant, § 2.
Tug, see Towage.

Condition or use of particular species of property, works, machinery, or other instrumentalities.

See Railroads, § 3.
Production and use of steam, see Steam.

Contributory negligence.

Of person injured by operation of railroad, see Railroads, § 3.
Of person injured on city street, see Municipal Corporations, § 1.
Of servant, see Master and Servant, § 2.

§ 1. Acts or omissions constituting negligence.

An act or omission may be in itself clearly negligent or clearly free of negligence. If its character is doubtful, the test of actionable negligence is the degree of care which persons of ordinary intelligence and prudence commonly exercise in the same circumstances. If the care exercised in such a case rises to or above that standard, there is no actionable negligence; if it falls below that standard, there is.
—Lake v. Shenango Furnace Co., 160 Fed. 887.....88 C. C. A. 69

Where defendant had consented to the use of a crane runway in defendant's mill by plaintiff, a servant of an independent contractor, in moving scaffolding from one truss in an addition to the mill to another, plaintiff in so using the runway was not a trespasser, but was within the class of persons present in dangerous premises by the owner's express permission, as to whom defendant was chargeable with an affirmative duty to take special precautions against injury that might happen to plaintiff by

Digitized by Google

reason of the operation of the crane on that part of the runway on which he was standing.

—Standard Steel Car Co. v. McGuire, 161 Fed. 527..88 C. C. A. 469

The controlling standard or test of reasonable or ordinary care is what a reasonably prudent person would ordinarily have done in the like circumstances, rather than the prevailing practice of others engaged in the same business. The practice of others, even though not a general or prevailing one is some evidence of what could have been done, and so has a material bearing upon whether the requisite care was exercised in what was actually done; and an instruction which treats what a reasonably prudent person would ordinarily have done in the like circumstances as the controlling standard or test of reasonable or ordinary care, and also treats the prevailing practice of others engaged in the same business as evidence only of that standard, and directs that such practice be considered with all the other evidence bearing upon the subject in fixing upon that standard, is not objectionable as permitting the jury to find that the conduct in question was negligent, even though it conformed to the prevailing practice of others, because that practice was not in itself the legal standard, but, as indicated in the instruction, was evidence only thereof.

—Chicago Great Western Ry. Co. v. McDonough, 161 Fed. 657..... 88 C. C. A. 517

§ 2. Contributory negligence.

Where plaintiff, a servant of an independent contractor, was permitted with defendant's consent to use the runway of a traveling crane in altering the position of scaffolding in defendant's mill, plaintiff did not assume the risk of defendant's negligence in operating the crane on such portion of the runway where plaintiff was standing, without notice to him, though plaintiff was also bound to guard himself against obvious dangers.

—Standard Steel Car Co. v. McGuire, 161 Fed. 527....88 C. C. A. 469

Where defendant had invited the servants of an independent contractor to use a traveling crane runway in altering the position of scaffolding in the mill, defendant was bound to anticipate the presence of such servants on the runway and to guard against dangers incident thereto.

—Standard Steel Car Co. v. McGuire, 161 Fed. 527....88 C. C. A. 469

Where a person without fault on his part is brought suddenly into a situation of imminent danger, he is not chargeable with culpable negligence because he fails to take the best means of escape, and the party whose negligent act brought him into such perilous situation is not relieved from liability for his injury if he acts as a person of ordinary prudence might have done under the same circumstances.

—Davis v. Chicago, R. I. & P. Ry. Co., 159 Fed. 10..88 C. C. A. 488

That a plaintiff at the time of his injury at a railroad crossing was riding in a vehicle with a friend who owned the horse and was driving did not relieve him from the duty of exercising ordinary care to avoid injury, and where he sat beside the driver, and made no objection when the latter negligently drove upon the track in front of an approaching train, such negligence is imputable to him.

—Davis v. Chicago, R. I. & P. Ry. Co., 159 Fed. 10..88 C. C. A. 488

§ 3. Actions.

In such a case the evidence of the ordinary practice and of the usual custom, if any, of ordinarily prudent and intelligent persons in the performance under the same or like circumstances of the same or like acts, is ordinarily competent upon the issue of negligence in the performance or omission of an act.

—Lake v. Shenango Furnace Co., 160 Fed. 887.....88 C. C. A. 69

The question of contributory negligence is for the jury, unless the evidence to establish such negligence is clear and uncontradicted, and such that no reasonable man could come to a contrary conclusion.

—Delaware & H. Co. v. Larnard, 161 Fed. 520....88 C. C. A. 462

Digitized by Google

In an action for injuries to a servant of an independent contractor by being struck by defendant's traveling crane, used with defendant's permission for the removal of scaffolding from one place in the mill to another, whether defendant was negligent in failing to use reasonable precautions to prevent such injury, and whether plaintiff was negligent, *held* for the jury.

—Standard Steel Car Co. v. McGuire, 161 Fed. 527..88 C. C. A. 469

NEW TRIAL.

Remand by appellate court for new trial, see Appeal and Error, § 8.
Review of discretionary rulings on motion for, see Appeal and Error, § 7.

NOTICE.

Of appointment of receiver, see Receivers, § 1.
Of death caused by negligent act, see Death, § 1.

NUNC PRO TUNC.

Allowance of bill of exceptions, see Exceptions, Bill of, § 1.

OFFICERS.

See Receivers.
Mandamus, see Mandamus, § 1.

OLEOMARGARINE.

Sale of in violation of internal revenue laws, see Internal Revenue.

OPINION EVIDENCE.

In civil actions, see Evidence, § 2.

OPTIONS.

To purchase timber, see Sales, § 1.

ORDERS.

Review of appealable orders, see Appeal and Error.

PARTIES.

Character ground of jurisdiction, see Courts, § 2.
Persons entitled to sue for wrongful death, see Death, § 1

Digitized by Google

In particular actions or proceedings.

See Equity, § 2.
To determine water rights, see Waters and Water Courses, § 2.
To enforce trust, see Trusts, § 4.

Judgment and relief as to parties, and parties affected by judgments or proceedings thereon.

Persons concluded by judgment, see Judgment, § 2.

PARTNERSHIP.

Appointment of receiver in proceeding for partnership dissolution, see Receivers, § 1.
Bankruptcy of, see Bankruptcy, § 1.

§ 1. The relation.

Evidence *held* to sustain a finding that a partnership existed between a judgment debtor and his deceased brother.

—Feidler v. Bartleson, 161 Fed. 30.....88 C. C. A. 194

§ 2. Dissolution, settlement, and accounting.

Where assets or debts of a partnership remain after dissolution, the partnership is considered as subsisting as to its creditors until its property is subjected to the satisfaction of their claims.

—Holmes v. Baker & Hamilton, 160 Fed. 922.....88 C. C. A. 104

PASSENGERS.

See Carriers, § 2.

PATENTS.

Estoppel to deny validity of patent, see Estoppel, § 1.
Jurisdiction of United States court of suit to compel specific performance of contract to assign patent, see Courts, § 2.

§ 1. Patentability.

When the court has to deal with a device which has achieved an undisputed success, and accomplishes a result never attained before, which is new, useful and in large demand, it is generally safe to conclude that the man who made it is an inventor.

—O'Rourke Engineering Const. Co. v. McMullen, 160 Fed. 933.... 88 C. C. A. 115

There is no invention in making two parts of one thing or one part of two, when by such change no different result is attained.

—D'Arcy v. Staples & Hanford Co., 161 Fed. 733....88 C. C. A. 606

§ 2. Persons entitled to patents.

The grant of a patent raises a presumption that the patentee was the original inventor of the thing patented, and that the invention was made at the time the application was filed, and one claiming priority of invention has the burden of proving, by evidence which is clear and certain, that the invention was conceived and reduced to practice by another prior to the date of the application. When such proof is made, however, the burden is shifted to the claimant under the patent to establish, if not with equal certainty, at least to the satisfaction of the court, a still earlier date of invention by the patentee.

—Consolidated Ry. Electric Lighting & Equipment Co. v. Adams & Westlake Co., 161 Fed. 343.....88 C. C. A. 355

Digitized by Google

§ 3. Construction and operation of letters patent.

When a claim of a patent is explicit, the courts cannot alter or enlarge it.

—Dey Time Register Co. v. Syracuse Time-Recorder Co., 161 Fed. 111 .....88 C. C. A. 275

A second patent applied for by and granted to a patentee for a device for the same purpose, but different in form from one shown in an earlier patent, may be taken into consideration in construing the earlier patent, as affording a presumption that it did not broadly cover other forms than the one described.

—D'Arcy v. Staples & Hanford Co., 161 Fed. 733..88 C. C. A. 606

§ 4. Title, conveyances, and contracts.

A conveyance by a corporation of all of its property, including its "good will, patents, trade-marks," etc., is effective as an assignment of a patent then owned by it, although not described therein, and it is immaterial as against an alleged infringer that it was not eligible for record under Rev. St. § 4898 (U. S. Comp. St. 1901, p. 3387).

—Delaware Seamless Tube Co. v. Shelby Steel Tube Co., 160 Fed. 928 88 C. C. A. 110

§ 5. Infringement.

Mere formal changes, where there is substantial identity, are unavailing to escape infringement.

—Delaware Seamless Tube Co. v. Shelby Steel Tube Co., 160 Fed. 928 88 C. C. A. 110

That a bill for infringement of a patent alleged infringement in a certain district only, omitting the usual words "and elsewhere," will not prevent the consideration of evidence of infringement outside of such district, where the answer denied infringement in such district or elsewhere, and the pleadings were treated as presenting such issue.

—O'Rourke Engineering Const. Co. v. McMullen, 160 Fed. 933..... 88 C. C. A. 115

A preliminary injunction should not be granted in a patent case, without a showing that the patent in suit has been adjudged valid by a court of competent jurisdiction, or that its validity has been generally acquiesced in by the public or has been admitted by defendant.

—St. Louis Street Flushing Mach. Co. v. Sanitary Street Flushing Mach. Co., 161 Fed. 725.....88 C. C. A. 585

Where a patent, at the time of a decree adjudging its infringement, has but a short time to run and is for a minor part of a machine, by reason whereof the defendant is liable, if enjoined, to suffer a loss out of proportion to the value of the transaction, the court may, in its discretion, instead of granting an injunction, permit the defendant as an alternative to compensate the complainant or to secure such compensation.

—Draper Co. v. American Loom Co., 161 Fed. 728....88 C. C. A. 588

A decree adjudging the validity and infringement of a patent in a suit defended by the manufacturer of the infringing device, who, although not a party to the record, had complete charge and control of the defense, is conclusive upon him, in a subsequent suit brought against him by the same complainant, as to all matters of fact and law necessarily litigated and determined, which include the validity of the claims involved and infringement by the particular device in suit; but such decree is not conclusive on the question of infringement by other devices which may fairly be differentiated from the one in suit.

—D'Arcy v. Staples & Hanford Co., 161 Fed. 733....88 C. C. A. 606

§ 6. Decisions on the validity, construction, and infringement of particular patents.

The Jefferey patents, Nos. 454,115 and 558,956, for improvements in rubber tires, both narrowly construed as required by the prior art, *held* not infringed.

—Gormley & Jeffery Tire Co. v. Pennsylvania Rubber Co., 161 Fed. 337 .....88 C. C. A. 417

Digitized by Google

The Rhoades patent, No. 454,791, for an improvement in looms, was not anticipated, and, while a narrow one, discloses invention; also *held* infringed.

—Draper Co. v. American Loom Co., 161 Fed. 728....88 C. C. A. 588

The Staples patent, No. 474,536, for spring supports for chair seats, etc., is not for a pioneer invention, but, in view of the prior art, is limited to the particular structure shown and described. Claims 1 and 3 *held* valid and infringed as to one device made by defendant, upon a prior decision binding on the parties, but not infringed by a second device in suit.

—D'Arcy v. Staples & Hanford Co., 161 Fed. 733.....88 C. C. A. 606

The Moran patent, No. 500,149, for an air lock for caissons in which work is carried on under an air pressure greater than that of the atmosphere, by means of which a bucket can be lowered into and hoisted from the working chamber by a continuous movement, whereas previously two hoists and two sets of tackle had been necessary, discloses invention, and covers a device of great merit and utility. Claim 2, in specifying a valve "closing against" the fall rope, does not include by implication as a necessary part a stuffing box or packing on the valve or a stuffing box on the rope. As so construed, claim 2 *held* infringed. Claim 3 *held* void for lack of invention, and, if conceded, validity not infringed.

—O'Rourke Engineering Const. Co. v. McMullen, 160 Fed. 933..... 88 C. C. A. 115

The Barr patent, No. 514,843, for an air lock for caissons, *held* void for lack of invention as to claims 1, 3, 4, 6, and 8.

—O'Rourke Engineering Const. Co. v. McMullen, 160 Fed. 933..... 88 C. C. A. 115

The Dey patent, No. 524,102, for a workman's time recorder, is for an improvement only, and entitled only to a narrow construction; as so construed *held* not infringed.

—Dey Time Register Co. v. Syracuse Time-Recorder Co., 161 Fed. 111 88 C. C. A. 275

The Stiefel patent, No. 551,340, for mechanism for making tubes from metallic ingots, was not anticipated and discloses invention, nor is it strictly limited to the precise construction shown and described; also *held* infringed.

—Delaware Seamless Tube Co. v. Shelby Steel Tube Co., 160 Fed. 928 88 C. C. A. 110

The Murray patent, No. 692,535, for a spring seat, if conceded validity, discloses patentable invention only in the particular means shown for attaching the springs to their support. As so construed, *held* not infringed.

—Murray v. D'Arcy, 161 Fed. 352.....88 C. C. A. 364

The Pieper patents, No. 704,099, for electric motor regulation, and No. 721,229, for a motor, are void for lack of invention; the only novel feature in the combinations shown being the application to the small alternating current fan motors of the existing art of the regulating shunt with varying resistance already in use in direct current dental motors, which did not involve invention.

—Pieper v. Electro Dental Mfg. Co., 160 Fed. 930....88 C. C. A. 112

The Pringle patent, No. 720,616, for the stud member of a separable button or fastener, construed, and *held* not infringed.

—United States Fastener Co. v. Cæsar, 160 Fed. 943..88 C. C. A. 162

The Kennedy patent, No. 740,982, for mechanism for driving dynamos on railway trucks for the purpose of the electric lighting of cars, *held* void on evidence clearly showing that the invention was conceived and reduced to practice by another some months before the patentee's application was filed; there being no satisfactory proof of conception of the invention by the patentee at an earlier date.

—Consolidated Ry. Electric Lighting & Equipment Co. v. Adams & Westlake Co., 161 Fed. 343.....88 C. C. A. 355

Digitized by Google

The Weissenthanner patent, No. 801,281, for a sheet-metal closure for bottles, etc., is void for lack of invention.
—Weissenthanner v. Dodge Metallic Cap Co., 161 Fed. 915..... 88 C. C. A. 388

---

§ 7. Patents enumerated.

UNITED STATES.

ORIGINAL.

77,758. Composition to be used as a cathartic, cited..... 401
175,573. Improvement in cigar molds, cited..... 399
231,523. Spring supports, cited.... 615
366,292. Mechanism for electric lighting of cars, cited... 359
435,995. Rubber tire, cited..... 418
454,115. Rubber tire, construed and held not infringed..... 417, 418, 419, 420
454,791. Loom, held not anticipated, valid and infringed..588, 589
474,536. Spring supports, held limited. Claims 1 and 3 held valid and infringed as to one device but not infringed by another..606, 616
493,160. Rubber tire, cited..... 418
500,149. Air lock for caissons, held valid and infringed as to claim 2; claim 3 held void for lack of invention, and, if conceded, validity not infringed... 115, 116, 118
514,843. Air lock for caissons, held void for lack of invention as to claims 1, 3, 4, 6, and 8.....116, 118
522,784. Workman's time recorder, cited 276
524,102. Workman's time recorder, as construed, held not infringed 275
551,340. Mechanism for making tubes from metallic ingots, held not anticipated, valid and infringed.. 110, 111
558,956. Rubber tire, construed, and held not infringed...417, 421
665,539. Mechanism for electric lighting of cars, cited... 360
665,540. Mechanism for electric lighting of cars, cited... 360
685,516. Mechanism for electric lighting of cars, cited... 360
692,535. Spring seat, held not infringed 365
699,187. Mechanism for electric lighting of cars, cited... 360, 361, 363
704,099. Electric motor regulation, held void for lack of invention 112
708,528. Bottle stopper, cited..... 388
720,616. Stud member of a separable button or fastener, construed and held not infringed 162
721,229. Electric motor, held void for lack of invention... 112, 115
736,134. Nozzle, cited..... 585
736,135. Street washer, cited..... 585
740,982. Mechanism for electric lighting of cars held void 355, 359, 361
777,053. Flushing nozzle, cited..... 585, 586, 587
801,281. Bottle stopper, held void for lack of invention.... 388

PAYMENT.

Of duties, see Customs Duties, § 3.
Of insurance premium, see Insurance, § 1.
Subrogation on payment, see Subrogation.

PERFORMANCE.

Of contract, see Contracts, § 3.

PERJURY.

§ 1. Offenses and responsibility therefor.

Under Stone and Timber Act (Act June 3, 1788, c. 151, § 1, 20 Stat. 89 [U. S. Comp. St. 1901, p. 1545]), making such lands subject to entry as are available chiefly for timber but unfit for cultivation, an entryman having made an affidavit that he sought to purchase the land for his own benefit and not for speculation could not escape punishment for

Digitized by Google

conspiracy on the ground that his pre-existing contract of sale related to the timber only.

—Nickell v. United States, 161 Fed. 702.....88 C. C. A. 562

Where an entryman on public lands signed and swore to an affidavit that he entered the land for his individual use and benefit, and not for speculation, when in fact, he intended to immediately transfer the land to another under a pre-existing contract, he thereby committed perjury as defined by Rev. St. § 5392 [U. S. Comp. St. 1901, p. 3653].

—Nickell v. United States, 161 Fed. 702.....88 C. C. A. 562

Defendant and others conspired to defraud entrymen on public lands of the location fees, and, in order to induce them to enter the lands, M. represented to them that he was the agent of a fictitious corporation of whom a fictitious person was president, which corporation desired to purchase the land, and would do so from the entrymen, either for a specified amount, or in accordance with an estimate of timber thereon. Pursuant to such conspiracy, defendants induced the entrymen to sign and swear to entry affidavits declaring that the entrymen were purchasing the land for their own benefit, and not for speculation, and that they had no contract or agreement to transfer the same after they had contracted to convey the land to such corporation. *Held* that, since M. would have been personally liable on such contracts under the rule that one who holds himself out as an agent of a nonexisting principal is personally liable, the affidavits were in fact false and constituted perjury, though there was no intention on defendant's part at any time to carry them out or purchase the land.

—Nickell v. United States, 161 Fed. 702.....88 C. C. A. 562

Procuring entryman to make such false affidavits constituted subornation of perjury as defined by Rev. St. § 5393 [U. S. Comp. St. 1901, p. 3654].

—Nickell v. United States, 161 Fed. 702.....88 C. C. A. 562

§ 2. Prosecution and punishment.

On the trial of a defendant, charged with false swearing in a proceeding for the naturalization of an alien, in giving false testimony as to the length of time the applicant had been in the United States, the ship's manifest, showing the date of his entry, is admissible in evidence to establish such fact, on proper proof of identity.

—Sullivan v. United States, 161 Fed. 253.....88 C. C. A. 289

On the trial of a defendant for perjury in falsely testifying that he had known an applicant for naturalization for five years prior to the hearing, during which time he had been a resident of the United States, a ship's manifest, showing that the applicant arrived in this country as an alien less than five years prior to the proceeding, and that in answer to a question propounded by the ship's officers at the port of emigration he stated, not under oath, that he had never been in the United States, is insufficient alone to warrant a conviction.

—Sullivan v. United States, 161 Fed. 253.....88 C. C. A. 289

PERSONAL INJURIES.

Particular causes or means of injury.

See Negligence.
Explosion of boiler, see Steam.
Negligent use of street, see Municipal Corporations, § 1.
Operation of railroad, see Railroads, § 3.

Particular classes of persons injured.

Employé, see Master and Servant, § 2.
Traveler on highway crossing railroad, see Railroads, § 3.

Digitized by Google

Remedies.

Evidence of judgment as estoppel or defense, see Judgment.
Questions presented for review, see Appeal and Error, § 5.

PETITION.

For review in bankruptcy proceedings, see Bankruptcy, § 4.
In admiralty, see Admiralty, § 2.
In bankruptcy, see Bankruptcy, § 1.

PIERS.

See Wharves.

PLACER CLAIMS.

See Mines and Minerals, § 1.

PLEA.

In civil actions, see Pleading, § 1.

PLEADING.

Pleading discharge in bankruptcy, see Bankruptcy, § 3.

In actions by or against particular classes of persons.

Stockholders, see Corporations, § 2.

In particular actions or proceedings.

See Admiralty, § 2; Creditors' Suit; Equity, § 3; Libel and Slander, § 1.
For infringement of patent, see Patents, § 5.
Indictment or criminal information or complaint, see Indictment and Information.
To enforce trust, see Trusts, § 4.
To set aside tax title, see Taxation, § 2.

Review of decisions and pleading in appellate courts.

Harmless error in rulings on, see Appeal and Error, § 7.

§ 1. Plea or answer, cross-complaint, and affidavit of defense.

A general denial followed by a specific denial of the same fact is improper, and, when pleaded, the general denial may be disregarded, or one of the denials stricken on motion, or defendant may be required to elect on which he will stand.

—Pauly Jail Bldg. & Mfg. Co. v. Jefferson County, 160 Fed. 866.... 88 C. C. A. 48

In an action on county warrants, payable out of the proceeds of county bonds, a specific denial that defendant had on hand the sum mentioned in the complaint from the proceeds of the sale of the bonds was not inconsistent with a general denial of the allegation that it had not applied any part of such amount to the payment of prior indebtedness of the county.

—Pauly Jail Bldg. & Mfg. Co. v. Jefferson County, 160 Fed. 866.... 88 C. C. A. 48

Digitized by Google

POLICY.

Of insurance, see Insurance.

POST OFFICE.

§ 1. Mailable matter, transmission and delivery of mail, and money orders.

The issue by the Postmaster General of a fraud order upon facts admitted, conceded, or established beyond dispute which do not sustain it, or in the absence of any evidence to sustain it, is an error of law remediable in the courts.

—People's United States Bank v. Gilson, 161 Fed. 286..88 C. C. A. 332

A court of equity may enjoin the enforcement of a fraud order (a) where the case was not within the jurisdiction of the Postmaster General as where the beneficial effect of the scheme was matter of opinion and not of fact; (b) where the issue of the order was induced by an error of law into which the Postmaster General fell; and (c) where its issue was caused by fraud or a gross mistake of fact so that the order was "palpably wrong."

—People's United States Bank v. Gilson, 161 Fed. 286..88 C. C. A. 332

In a doubtful case within his jurisdiction in the absence of fraud or a gross mistake of fact where there is some evidence which is satisfactory to the Postmaster General to sustain a fraud order issued under sections 3929 and 4041 of the Revised Statutes, as amended by Act Sept. 19, 1890, c. 908, §§ 2, 3, 26 Stat. 466, and by Act March 2, 1895, c. 191, § 4, 28 Stat. 964 (U. S. Comp. St. 1901, pp. 2686, 2688, 2749), his decision of a question of fact upon which the order is founded is conclusive, and it will not be reviewed by the courts.

—People's United States Bank v. Gilson, 161 Fed. 286..88 C. C. A. 332

POWERS.

Of attorney, see Principal and Agent.

PRACTICE.

In land office, see Public Lands, § 2.

In particular civil actions or proceedings.

See Contempt, § 2; Replevin.

Condemnation proceedings, see Eminent Domain, § 1.

Particular proceedings in actions.

See Abatement and Revival; Continuance; Evidence; Judgment; Judicial Sales; Jury; Limitation of Actions; Pleading; Trial.

Particular remedies in or incident to actions.

See Attachment; Injunction; Receivers.

Procedure in criminal prosecutions.

See Criminal Law.

Procedure in exercise of special or limited jurisdiction.

In admiralty, see Admiralty; Collision, § 7; Maritime Liens, § 2.

In bankruptcy, see Bankruptcy, § 1.

In equity, see Equity.

Digitized by Google

Procedure in or by particular courts or tribunals.

See Courts.

Procedure on review.

See Appeal and Error; Exceptions, Bill of.

PREFERENCES.

Effect of proceedings in bankruptcy, see Bankruptcy, § 2.

PREJUDICE.

Ground for reversal in civil actions, see Appeal and Error, § 7.

PRELIMINARY INJUNCTION.

See Injunction, § 2.

PREMIUMS.

For insurance, see Insurance, §§ 1, 2.

PRESCRIPTION.

Acquisition of rights, see Waters and Water Courses, § 2.

PRESUMPTIONS.

On appeal or error, see Appeal and Error, § 7.

PRINCIPAL AND AGENT.

See Brokers.

§ 1. **Mutual rights, duties, and liabilities.**
An agent for the sale of real estate, who receives a price in excess of that reported and accounted for to his principal, is liable to such principal for the difference.
—Babcock v. De Mott, 160 Fed. 882.....88 C. C. A. 64

PRINCIPAL AND SURETY.

See Indemnity.

PRIORITIES.

Of mortgages, see Mortgages, § 1.

PROCESS.

Particular forms of writs or other process.

See Injunction; Mandamus; Replevin.

Digitized by Google

PROPERTY.

Of particular classes of persons.

See Indians.

Particular species of property.

See Fish; Mines and Minerals; Trade-Marks and Trade-Names.

Transfers and other matters affecting title.

Taking for public use, see Eminent Domain.

PROVINCE OF COURT AND JURY.

In civil actions, see Trial, § 3.

PROXIMATE CAUSE.

Direct or remote consequences of injury, see Damages, § 1.

PUBLIC DEBT.

See Counties, § 1.

PUBLIC LANDS.

Appropriation of water rights, see Waters and Water Courses, § 1.
Lands under water, see Navigable Waters, § 1.
Mineral lands, see Mines and Minerals, § 1.
Perjury in affidavit as to entry of, see Perjury, § 1.
Rights of Indians in, see Indians.

§ 1. Government ownership.

The federal Constitution delegates to Congress the general power absolutely and without limitation to dispose of and make all needful rules and regulations concerning the public domain independent of the locality of the land, whether situated in a state or territory, the exercise of which power cannot be restricted in any degree by state legislation.

—Shannon v. United States, 160 Fed. 870.....88 C. C. A. 52

Congress had no power to relinquish any of its jurisdiction over the public domain by a compact with the state of Montana on admission of the state into the Union, nor had the state any power to reserve any such control.

—Shannon v. United States, 160 Fed. 870.....88 C. C. A. 52

Public lands in the state of Montana were not subject to the stock and fence laws of the state which were applicable only to lands subject to the state's dominion.

—Shannon v. United States, 160 Fed. 870.....88 C. C. A. 52

Where the United States brought suit to restrain the trespass of defendant's cattle on a forest reserve, the fact that in such suit it acted in its proprietary capacity, and was subject to the ordinary rules of pleading, practice, and laws applicable to the case, did not operate as a waiver of any of its sovereign rights to the land sought to be protected.

—Shannon v. United States, 160 Fed. 870.....88 C. C. A. 52

The original title to lands in the United States was not in the Indians; their rights being mere rights of possession or occupancy.

—United States v. Moore, 161 Fed. 513.....88 C. C. A. 455

Digitized by Google

§ 2. **Survey and disposal of lands of United States.**

The right to particular tracts of land within the place limits of a railroad grant like that to the Northern Pacific Railroad Company vests in the grantee upon the filing of the map of definite location of the railroad, approved by the proper officer of the government.

—Hoyt v. Weyerhaeuser, 161 Fed. 324.....88 C. C. A. 404

The land in question was within indemnity limits under the grants to the Northern Pacific Railroad Company (Act July 2, 1864, 13 Stat. 365, c. 217; Act May 31, 1870, 16 Stat. 378), and the Secretary had withdrawn and suspended it from entry and sale. The company had filed its selection of this land, but the Secretary had not approved it. Thereupon Jones entered and paid for it under the timber and stone acts, Act June 3, 1878, c. 151, § 1, 20 Stat. 89 (U. S. Comp. St. 1901, p. 1545), and Act Aug. 4, 1892, c. 375, § 2, 27 Stat. 348 (U. S. Comp. St. 1901, p. 1547). Thereafter the Secretary approved the railroad company's selection and issued a patent for the land to that company.

Held, the entire beneficial interest and the equitable right to the land vested in Jones upon his completion of his purchase, and the railroad company and its successors in interest held the title under the patent in trust for him and his grantees.

—Hoyt v. Weyerhaeuser, 161 Fed. 324.....88 C. C. A. 404

Lands within the indemnity limits of these grants were open to entry and sale under the general land laws of the United States until the Secretary approved their selection by the grantee, although the lists of their selection had been duly filed with the Land Department.

—Hoyt v. Weyerhaeuser, 161 Fed. 324.....88 C. C. A. 404

Under the grants to the Northern Pacific Railroad Company, the Secretary of the Interior had no authority to withdraw or suspend from sale or entry lands within the indemnity limits of the grants which had not been previously selected with his approval, to supply deficiencies within the place limits of the grant, and such withdrawals and suspensions were ineffectual.

—Hoyt v. Weyerhaeuser, 161 Fed. 324.....88 C. C. A. 404

The right to particular tracts of indemnity land under such a grant vests in the company upon the approval by the Secretary of the Interior of the company's selection of them, and neither this right nor the title thereunder relates back so as to divest the rights of prior entrymen or purchasers of the land under the general land laws of the United States.

—Hoyt v. Weyerhaeuser, 161 Fed. 324.....88 C. C. A. 404

The jurisdiction and power of disposition of the public lands by the Land Department of the United States is not arbitrary, unlimited, or discretionary; but it is subject to and must be exercised in accordance with the laws of the land, and any violation or disregard of them by the Land Department is remediable in the courts.

—Hoyt v. Weyerhaeuser, 161 Fed. 324.....88 C. C. A. 404

Whenever the officers of the Land Department have been induced by erroneous views of the law, by fraud, or by clear mistake of fact, to issue a patent to the wrong party, a court of equity, at the suit of the rightful claimant, may avoid the decision, charge the legal title under the patent with a trust in his favor, and execute the trust.

—Hoyt v. Weyerhaeuser, 161 Fed. 324.....88 C. C. A. 404

The beneficiaries of Act July 1, 1898, c. 546, 30 Stat. 620, are purchasers directly from the United States of, occupants of, and qualified settlers upon, the lands there described prior to January 1, 1898, under some law of the United States or some ruling of the Interior Department.

One who had not purchased of the United States, or occupied, or settled upon, or acquired any equitable right to, or interest in, any of the land there described prior to January 1, 1898, but whose application to purchase had been rejected by the Land Department when presented, does not fall within the provisions of the act and cannot invoke its aid.

—Campbell v. Weyerhaeuser, 161 Fed. 332.....88 C. C. A. 412

Digitized by Google

One, whose application to purchase is rejected when presented may not maintain such a suit.
—Campbell v. Weyerhaeuser, 161 Fed. 332.....88 C. C. A. 412

One who has never by acceptance of a grant, or by settlement and improvement, or by entry, or by payment, placed himself in privity with the United States in title before a patent issues to another, may not maintain a bill in equity to charge the title under it with a trust in his favor.
—Campbell v. Weyerhaeuser, 161 Fed. 332.....88 C. C. A. 412

PUBLIC SERVICE CORPORATIONS.

See Carriers; Railroads.

PUBLIC USE.

Taking property for public use, see Eminent Domain.

QUASHING.

Indictment or information, see Indictment and Information, § 2.

QUESTIONS FOR JURY.

In civil actions, see Trial, § 2.

QUIETING TITLE.

Jurisdiction of United States courts, see Courts, § 2.

§ 1. **Right of action and defenses.**
Under Ballinger's Ann. Codes & St. Wash. § 5521 (Pierce's Code, § 1156), which authorizes any one in possession of real property to maintain a suit to determine an adverse claim thereto, it is immaterial that possession was taken for the purpose of instituting the suit, if it was not tortious or in violation of the prior possession of another.
—Kraus v. Congdon, 161 Fed. 18.....88 C. C. A. 182

RAILROADS.

As employers, see Master and Servant.
Carriage of goods and passengers, see Carriers.
Grants of land in aid, see Public Lands, § 2.
Province of court and jury in action for death caused by operation of, see Trial, § 3.
Subrogation to rights of creditors on paying notes of railroad company, see Subrogation.

§ 1. **Indebtedness, securities, liens, and mortgages.**
Where a court, in its decree confirming the sale of railroad property in a foreclosure suit, required the purchaser to assume and pay any indebtedness or liability incurred by the receivers which should be adjudged priority over the mortgage and should not be paid by the receivers from funds in their hands, and reserved jurisdiction of the case for the enforcement of such requirement, a subsequent order, requiring all claim-

Digitized by Google

ants to present their claims before the master before a date fixed, for action thereon by the court, and barring any not so presented, does not necessarily include claims which were then in suit before the same court.
—Southern Ry. Co. v. Townsend, 161 Fed. 310.....88 C. C. A. 390

§ 2. **Receivers.**
A court in its decree confirming the sale of railroad property in a foreclosure suit required the purchaser to assume and pay any indebtedness or liability incurred by the receivers which should be adjudged priority over the mortgage, and should not be paid by the receivers from funds in their hands, and reserved jurisdiction of the case for the enforcement of such requirement, and by a subsequent order required all claimants to present their claims before the master before a date fixed for action thereon by the court, and barring any not so presented. *Held*, on a subsequent discharge of the receivers, such actions at law pending against them not having been disposed of, that the court had power under such reserved jurisdiction to appoint a special receiver against whom such actions might be revived, and to defend the same, and retake possession of sufficient property to satisfy any judgments recovered, if not paid by the purchaser.
—Southern Ry. Co. v. Townsend, 161 F. 310.....88 C. C. A. 390

§ 3. **Operation.**
Shannon's Code Tenn. §§ 1574, 1575, which require a railroad company to keep some one on the locomotive always on the lookout ahead, and if any person, animal, or other obstruction appears on the track to sound the whistle and employ every possible means to stop the train, and make a company which fails to observe such precautions responsible for all damages resulting from any accident or collision, as construed by the Supreme Court of the state, apply to the case of a train being backed on a passing track at a station while waiting for the passing of another train on the main track, and make the company liable for the injury of a person run over by such train, where, owing to its length, those in the engine could not see the track in front of the moving cars.
—Cincinnati, N. O. & T. P. Ry. Co. v. Davis, 161 Fed. 334.....
88 C. C. A. 414

In an action to recover for the death of a person killed at a railroad crossing by a switching train, a statement in the charge of the court that, if a member of the crew had been stationed at the crossing to warn persons on the highway of the movements of the train, it might have prevented the injury, was not reversible error, in connection with clear instructions as to the province of the jury and giving the claims of the respective parties, and where the evidence was such as to warrant a finding that the failure to so station a man was negligence.
—Delaware & H. Co. v. Larnard, 161 Fed. 520.....88 C. C. A. 462

The fact that safety gates maintained by a railroad company at a highway crossing are open is an implied invitation to persons traveling the highway to enter upon the crossing; and, while it does not absolve them from the duty of taking reasonable precautions to avoid injury by moving trains, it qualifies that duty to the extent that they may reasonably presume that the company's servants have performed their duty in ascertaining the safety of the crossing.
—Delaware & H. Co. v. Larnard, 161 Fed. 520.....88 C. C. A. 462

The four tracks of defendant railroad company and those of two other companies crossed a street near each other. There were yards near, and the tracks were largely used for switching purposes. Defendant maintained gates at the outer sides of the entire group of tracks; they being 224 feet apart. Plaintiff's husband and his son approached the crossing on foot, with two wagons following, loaded with lumber, which was to be loaded in a car. The gates were open, and deceased and his son went ahead as a further precaution against trains which might be ap-

Digitized by Google

proaching. When they reached the center of defendant's tracks, they saw a train approaching on one of the inner tracks and started back, when a freight train on the outer track backed, and plaintiff's husband was struck and killed by the caboose, which was being kicked back onto a switch. The son testified that the car was standing still and was started suddenly. The conductor testified that it was moving slowly, and that he stood on the rear platform of the caboose and called a warning to the deceased. *Held*, that under such evidence the jury were justified in finding that the crossing was an unusually dangerous one, and required extraordinary care on the part of defendant, and that, in view of the open gates, the failure to station a man at the crossing, either permanently or temporarily, to give warning of the movement of the switching train, was negligent.

—Delaware & H. Co. v. Larnard, 161 Fed. 520.....88 C. C. A. 462

Where plaintiff and another driving a horse approached to within 25 feet of a railroad crossing, well known to them to be dangerous, at a trot, and even there could not see along the track for more than 50 to 150 feet nor hear signals given by an approaching train because of an intervening bluff and an adverse wind and the noise made by their vehicle, their action in driving upon the crossing without stopping to look and listen was negligent, and precluded plaintiff from recovering damages from the railroad company for an injury received by jumping out of the vehicle to avoid danger from an approaching train which they did not see until the horse had stepped upon the track.

—Davis v. Chicago, R. I. & P. Ry. Co., 159 Fed. 10....88 C. C. A. 488

Kirby's Dig. Ark. § 6607, providing that "it is the duty of all persons running trains in this state upon any railroad to keep a constant lookout for persons and property upon the tracks," which is construed by the Supreme Court of the state to apply to the running of trains in railroad yards, only requires that the trainmen shall keep a lookout ahead on moving trains, and, where such lookout is properly kept, does not, without more, render a company liable for the death of a person killed in railroad yards who was not seen.

—Springer v. St. Louis Southwestern Ry. Co., 161 Fed. 801.....
88 C. C. A. 619

A fire started in the daytime in a residence addition of Pine Bluff, Ark., destroying about 100 houses. In endeavoring to save their household goods the residents carried them onto the tracks of the railroad immediately south of the burning district. These tracks were in the switchyards of the company, without any streets or private crossings thereon. During a period of about 45 minutes of the fire the railroad company had run its cars off of the first tracks next to the fire, when the employés, discovering that some oil tanks on the remaining cars were beginning to smoke from the heat of the fire and were in danger of explosion and augmenting the danger of the situation, ran an engine to the end of the cars to push them out. There was an opening in this line of cars of four or five feet, not left under conditions to indicate an invitation to the people to use it as a passway for carrying goods. Just before this movement of the train a switchman went to this opening and adjusted the drawheads for the connection, and gave warning to the people thronging about the place of the intended movement, and then passed down the train to warn persons who were passing over and beneath the drawheads. The deceased, who worked in a mill shop outside of the addition, left his post and went to the fire, and was assisting in carrying a mattress through said opening. He was warned by a third person of the danger just before the accident, and the bell on the engine passing down the open tracks to the rear of these cars was ringing, and continued to ring as the movement of the cars begun. The engineer and his fireman kept a lookout as the movement of the train began, but did not observe the defendant. *Held*, that to the deceased, who was a mere volunteer on its right of way, the company owed no other duty than not to wantonly or recklessly injure him,

Digitized by Google

and his failure to stop, look, or listen directly contributed to his death, and a verdict for the defendant below was properly directed.
—Springer v. St. Louis Southwestern Ry. Co., 161 Fed. 801..... 88 C. C. A. 619

RATIFICATION.

Of assignment, see Assignments, § 2.

REAL ESTATE AGENTS.

See Brokers.

RECEIVERS.

Determination and disposition of cause on appeal from order appointing, see Appeal and Error, § 8.
Of railroad companies, see Railroads, § 2.
Stay of proceedings on appeal from orders appointing, see Appeal and Error, § 4.

§ 1. Appointment, qualification, and tenure.
Code Ga. 1895, § 4904, providing that, under extraordinary circumstances, a receiver may be appointed without notice, is merely confirmatory of a principle of equity jurisdiction authorizing the appointment of a receiver without notice in cases of urgent emergency.
—Mann v. Gaddie, 158 Fed. 42.....88 C. C. A. 1

Plaintiff, defendant, and two others formed a partnership for the purchase and sale of timber rights and lands; it being agreed that defendant and W. should secure options on timber and timber lands, and that plaintiff and the fourth member of the firm should secure purchasers therefor. Defendant and W. obtained options, escrow deeds, and leases, but plaintiff and his partner were unable to procure purchasers, whereupon defendant obtained a purchaser and denied plaintiff's right to participate in the profits of the transaction. *Held* insufficient to justify the appointment of a receiver without notice to take charge of such options, etc., in a suit by plaintiff for dissolution of the partnership and for an accounting; it appearing that defendant was solvent and willing to give a bond to secure plaintiff's interest in the profits, if any.
—Mann v. Gaddie, 158 Fed. 42.....88 C. C. A. 1

The rule that a receiver shall not be appointed without notice except in case of urgent necessity is applicable to a suit by one partner against another for an accounting and for dissolution of the firm.
—Mann v. Gaddie, 158 Fed. 42.....88 C. C. A. 1

A receiver may be appointed without notice if the defendant is beyond the jurisdiction of the court or cannot be found, or some urgent emergency is shown rendering interference before there is time to give notice necessary to prevent waste, destruction, or loss of the property, or in case notice will jeopardize the safety of the property over which the receivership is to be extended.
—Mann v. Gaddie, 158 Fed. 42.....88 C. C. A. 1

RECORDS.

Mandamus to compel recording of judgment, see Mandamus, § 1.
Transcript on appeal or writ of error, see Appeal and Error, § 5.

REFERENCE.

To master or commissioner in equity, see Equity, § 5.

Digitized by Google

REINSURANCE.

See Insurance, § 6.

REMAND.

Of cause on appeal or writ of error, see Appeal and Error, § 8.

REMEDY AT LAW.

Effect on jurisdiction of equity, see Creditors' Suit.

REMOVAL OF CLOUD.

See Quieting Title.

REPLEVIN.

§ 1. Right of action and defenses.

Though the question of title to personal property may be litigated in replevin, if properly brought, the action independent of statute is a possessory one brought by complainant to recover possession of personal property.

—Sloan v. Merchants' Savings & Trust Co. of Pittsburg, 160 Fed. 654 88 C. C. A. 20

Plaintiff may not maintain replevin to establish title to chattels of which he is in possession at the time suit is brought either at common law or Acts Pa. 1901 (P. L. 88, No. 61), regulating procedure in such action.

—Sloan v. Merchants' Savings & Trust Co. of Pittsburg, 160 Fed. 654 88 C. C. A. 20

§ 2. Proceedings for taking and redelivery of property.

Acts Pa. 1901 (P. L. 88, No. 61, § 1), declaring that plaintiff in replevin shall give bond, with condition that if he fails to maintain title to goods or chattels he will pay to the party entitled their value and legal costs, etc., does not authorize the giving of such bond in any case in which plaintiff is in possession of the property, title to which he seeks to establish in replevin.

—Sloan v. Merchants' Savings & Trust Co. of Pittsburg, 160 Fed. 654 88 C. C. A. 20

The distinction between a requisition in replevin and a lien created by an attachment levy is that the former deals primarily with the property of the plaintiff in replevin, and the latter with the property of the debtor.

—In re L. Rudnick & Co., 160 Fed. 903.....88 C. C. A. 85

REQUESTS.

For instructions in civil actions, see Trial, § 3.

REQUISITION.

In replevin, see Replevin, § 2.

RESERVATIONS.

Forest reservations, see Woods and Forests.

Digitized by Google

RES JUDICATA.

See Judgment, § 2.

REVENUE.

See Customs Duties; Internal Revenue; Taxation.

REVIEW.

See Appeal and Error; Criminal Law, § 4.

RIPARIAN RIGHTS.

See Navigable Waters, § 2.

RISKS.

Assumed by employé, see Master and Servant, § 2.
Within insurance policy, see Insurance, § 4.

ROADS.

Streets in cities, see Municipal Corporations, § 1.

SALES.

On order or judgment of court, see Judicial Sales.
Tax sales, see Taxation, § 1.

§ 1. Requisites and validity of contract.
Under a contract giving an option to purchase timber, to expire on a certain date, and providing that, "if accepted, the above-named parties are to pay for said timber an additional amount of $2,450, in cash upon the making of a contract for the sale of said timber," the purchasers were required to pay or tender the money before the option expired to entitle them to maintain an action to recover damages for the refusal of the seller to make the sale.
—Pollock v. Riddick, 161 Fed. 280.....88 C. C. A. 326

SCHEDULE.

Of property of bankrupt, see Bankruptcy, § 3.

SEAL FISHERIES.

See Fish.

SEAMEN.

Libelants signed shipping articles for a voyage "from the port of San Francisco, Cal., to Portland, Or., and other Columbia river ports, and return to San Francisco for final discharge, either direct, or via one or more ports on the Pacific coast, north or south of the port of discharge, as the

Digitized by Google

master may direct, voyage not to exceed six calendar months." The vessel proceeded to Portland, where she took on a cargo of lumber for Los Angeles, and after its discharge proceeded north, past San Francisco, to Gray's Harbor for another cargo of lumber for San Francisco. *Held*, that she did not deviate from the stipulated voyage, and that, in leaving the vessel at Gray's Harbor against the master's protest and after having served only 26 days, libelants were deserters and forfeited their right to wages.

—The Grace Dollar, 160 Fed. 906.....88 C. C. A. 88

SETTLEMENT.

Of bill of exceptions, see Exceptions, Bill of, § 1.

SHIPPING.

See Admiralty; Collision; Maritime Liens; Seamen; Towage; Wharves.
Delay in performance of contract for alteration of vessel, see Contracts, § 3.
Modification of contract for making alterations in vessel, see Contracts, § 2.

§ 1. **Charters.**

The word "about," used in a time charter in designating the length of the term, is applicable to the term whether it be over or under the exact term stated, and, if the voyage terminates so near the end of the fixed time as to make another voyage unreasonable, the charterer may deliver or the owner may withdraw the vessel, or, if another voyage is reasonable, the charterer may require it at the charter rate of freight.

—The Rygja, 161 Fed. 106.....88 C. C. A. 270

A charter was for "about six calendar months," with a privilege of renewal to the charterer on notice for about six months more, which notice was given. The vessel completed the voyage she was then on 50 days after the expiration of the first six months, and entered upon another. *Held*, that the first term ended and the second began at that time, and not at the end of six months from the time the first began, and, that on the termination of the second voyage in New York some 30 days before the expiration of six months from the time it commenced, the charterer was entitled to exercise an option given him by the charter party to redeliver the vessel in a European port.

—The Rygja, 161 Fed. 106.....88 C. C. A. 270

Evidence considered, and *held* not to sustain the defense of a charterer to a suit for charter hire, admittedly due under a time charter, based on the claim that the master refused to load full cargoes.

—Yaccarezzo v. 567,000 Gallons of Molasses, 161 Fed. 543.....
88 C. C. A. 485

A charter provided that the charterer had the option of providing stevedores for discharging cargo at port of discharge, steamer paying for the same at current rate of 40 cents, and to provide cranes and winches with full necessary steam or hand power to work the same if required by the charterer, ship to load and discharge as rapidly as possible by night as well as by day when required to do so by charterer. The unloading was done by the charterer's nominees by day and night; brokers representing both the ship and the charterer. In the account rendered the brokers charged the ship 40 cents a ton for unloading and an additional bill of $210.90 for night work by the stevedores; the celerity of the discharge being such as to also entitle the charterer to $1,000 for discharge money. *Held* that, if the charterer elected to discharge both by day and night, the ship was only bound to furnish steam for the winches and pay

Digitized by Google

the day discharge rate, and was not liable for extra pay to the stevedores for night work.
—The Bencliff, 161 Fed. 909; Samuel v. Horsley Line, Id..... 88 C. C. A. 514

§ 2. **Carriage of goods.**
A shipper of goods on a vessel is entitled to a bill of lading therefor as a matter of right; but, where the master claims demurrage for delay in loading, he has the right to give notice of the claim in, or by indorsement upon, such bill, so as to charge a transferee with such notice.
—Watt v. Cargo of Lumber, 161 Fed. 104.....88 C. C. A. 268

Delay in discharging through default of the vessel does not entitle the charterer or consignee to damages, in the absence of a contract for delivery by a particular day, but simply extends the time within which the discharge may be made without liability of the charterer or consignee for demurrage.
—Millburn v. Federal Sugar Refining Co. of Yonkers, 161 Fed. 717, 88 C. C. A. 577

§ 3. **Demurrage.**
The owners of a schooner *held* entitled to recover demurrage from a charterer for delay in discharging a cargo of lumber in New York under a charter providing for customary dispatch where the vessel was required by the charterer to discharge portions of the cargo at different docks, and the delay resulted from her detention at the first for a longer time than was anticipated through no fault of the vessel, which threw her behind in reaching the others, and in consequence the berths reserved for her there were occupied and she was obliged to wait, the charterer being bound by the custom of the port to furnish her berths when ready.
—Leary v. Talbot, 160 Fed. 914.....88 C. C. A. 96

A vessel is not entitled to demurrage for the time she is detained by a shipper by virtue of a legal seizure, although on a claim which was unfounded and subsequently dismissed, unless the proceeding was in bad faith or malicious.
—Watt v. Cargo of Lumber, 161 Fed. 104.....88 C. C. A. 268

Where a contract of affreightment required a vessel only to deliver the cargo at the port of New York, although it contained no specific provision for demurrage, she is entitled to recover damages in the nature of demurrage for delay resulting from her being ordered by the cargo owner to discharge at a berth, which she could not then reach, because of dredging work being done by the government.
—Roney v. Chase, Talbot & Co., 161 Fed. 309.....88 C. C. A. 389

Under a charter party requiring the charterer to discharge the vessel at New York with "customary dispatch" the lay days for discharging began to run when the vessel reached the berth designated by the charterer, although she was obliged to wait her turn to enter, there being no proof of any custom of the port to require her to wait her turn or that the charterer should be allowed any particular time in case the berth was full.
—Swan v. Wiley, Harker & Camp Co., 161 Fed. 905..88 C. C. A. 510

Charter parties required the vessel in each case to load a cargo of phosphate at Port Inglis, Fla., and provided that the vessel should proceed to the Port Inglis anchorage, "or as near thereunto as she may safely get, and there load. * * * The cargo to be brought alongside and taken from alongside free of risk and expense to the vessel, any custom of the port to the contrary notwithstanding. * * * Steamer or vessel to proceed to safe anchorage at port of loading and there load." Also: "The cargo to be supplied at the average rate of not less than 400 tons per weather working day, * * * commencing 24 hours after vessel is in loading berth and is ready to receive cargo and written notice given to that effect." Vessels were obliged to load at such port some miles from shore, and the government had established there two loading buoys. Three vessels were ordered to proceed to the port at the same time, and they reached there and anchored, and gave notice that they were ready

Digitized by Google

to load. *Held*, that the "loading berth" referred to in the charter was the "safe anchorage" spoken of in the prior clause; that, having reached such anchorage and given the required notice, the lay days commenced, and the charterer could not require the vessels to await their turn at the loading buoys before the time commenced, even though that may have been the custom of the port, nor avoid liability for demurrage because of their detention for two or three weeks beyond the time, either because they could not get to the buoys or because they could not, perhaps have been fully loaded where they lay—its duty being to load them there, so far as could be safely done, and then permit them to move further out for its completion.
—Constantine & Pickering S. S. Co. v. Auchincloss, 161 Fed. 843; McLean v. Same, Id. ..... 88 C. C. A. 661

SLANDER.

See Libel and Slander.

SPECIFIC PERFORMANCE.

§ 1. **Nature and grounds of remedy in general.**
Under Rev. St. Mo. 1899, § 3616 (Ann. St. 1906, p. 2034), which makes any alienation of a homestead by the husband alone null and void, an executory contract by a husband to sell homestead property which exceeds in value the statutory limitation of $3,000 will not be specifically enforced by a court of equity as to the excess in value, which was not the contract made, nor will damages be awarded in lieu of performance as to such excess; both parties being chargeable with knowledge that the contract was void when it was signed.
—Mundy v. Shellaberger, 161 Fed. 503 ..... 88 C. C. A. 445

STATEMENT.

By witness inconsistent with testimony, see Witnesses, § 3.

STATES.

Courts, see Courts.
Effect of state laws on public lands, see Public Lands, § 1.

STATUTES.

For statutes relating to particular subjects, see the various specific topics.
Adoption by United States courts of state laws as rules of decision, see Courts, § 2.

STATUTES CONSTRUED.

UNITED STATES.

STATUTES AT LARGE.

1864, July 2, ch. 217, 13 Stat. 365 405
1870, May 31, Res. No. 67, 16 Stat. 378 405
1878, June 3, ch. 151, § 1, 20 Stat. 89 (U. S. Comp. St. 1901, p. 1545) 405, 562
1879, June 30, ch. 52, § 2, 21 Stat. 43 (U. S. Comp. St. 1901, p. 624) 532
1884, May 17, ch. 53, 23 Stat. 24 .. 225

Digitized by Google

1884, May 17, ch. 53, § 8. 23 Stat. 26 225
1884. July 4, ch. 180, 23 Stat. 79.. 455
1886, Aug. 2, ch. 840, 24 Stat. 209 (U. S. Comp. St. 1901, p. 2228).. 532
1886, Aug. 2, ch. 840, § 3, 24 Stat. 209 (U. S. Comp. St. 1901, p. 2229). Amended by Act 1902, May 9, ch. 784, § 2, 32 Stat. 194 (U. S. Comp. St. Supp. 1907, p. 636) 533
1886, Aug. 2, ch. 840, §§ 4, 6, 13, 24 Stat. 209, 210, 211 (U. S. Comp. St. 1901, pp. 2229, 2230, 2232).. 533
1887, Feb. 4, ch. 104, § 13, 24 Stat. 383 (U. S. Comp. St. 1901, p. 3164) 23
1887, Feb. 8, ch. 119, 24 Stat. 388 653
1888, May 1, ch. 213, 25 Stat. 124 647
1889, March 2, ch. 382, § 10, 25 Stat. 862 (U. S. Comp. St. 1901, p. 3172) 23
1890, Sept. 19, ch. 908, §§ 2, 3, 26 Stat. 466 (U. S. Comp. St. 1901, pp. 2686, 2749) 332
1891, March 3, ch. 517, 26 Stat. 828 (U. S. Comp. St. 1901, p. 550).. 2
1892, Aug. 4, ch. 375, § 2, 27 Stat. 348 (U. S. Comp. St. 1901, p. 1547) 405
1895, March 2, ch. 191, § 4, 28 Stat. 964 (U. S. Comp. St. 1901, p. 2688) 332
1897, June 4, ch. 2, 30 Stat. 34 (U. S. Comp. St. 1901, p. 1542)..... 53
1897, June 7, ch. 4, § 1, art. 18, 30 Stat. 100 (U. S. Comp. St. 1901, p. 2882) 266
1897, June 7, ch. 4, § 1, art. 19, 30 Stat. 101 (U. S. Comp. St. 1901, p. 2883) 58
1897, June 7, ch. 4, § 1, art. 25, 30 Stat. 101 (U. S. Comp. St. 1901, p. 2883) 665
1897, July 24, ch. 11, § 1, Schedules L, N, pars. 390, 432, 30 Stat. 187, 191 (U. S. Comp. St. 1901, pp. 1670, 1675) 107
1898, May 14, ch. 299, 30 Stat. 409 (U. S. Comp. St. 1901, p. 1412).. 224
1898, June 13, ch. 488, §§ 29, 30, 30 Stat. 464, 465. Amended by Act 1901, March 2, ch. 806, §§ 10, 11, 31 Stat. 946, 948 (U. S. Comp. St. 1901, pp. 2307, 2308) 254
1898, July 1, ch. 541, § 5a, c, 30 Stat. 547 (U. S. Comp. St. 1901, p. 3424) 104
1898, July 1, ch. 541, § 7a (9), 30 Stat. 548 (U. S. Comp. St. 1901, p. 3424) 554
1898, July 1, ch. 541, § 21a, 30 Stat. 552 (U. S. Comp. St. 1901, p. 3430) 306
1898, July 1, ch. 541, § 24b, 30 Stat. 553 (U. S. Comp. St. 1901, p. 3432) 99
1898, July 1, ch. 541, § 67f, 30 Stat. 565 (U. S. Comp. St. 1901, p. 3450) 85
1898, July 1, ch. 541, § 70, 30 Stat. 565 (U. S. Comp. St. 1901, p. 3451) 633
1898, July 1, ch. 546, 30 Stat. 620 412
1900, April 12, ch. 191, § 3, 31 Stat. 77 511
1901, March 2, ch. 806, §§ 10, 11, 31 Stat. 946, 948 (U. S. Comp. St. 1901, pp. 2307, 2308) 254
1902, April 12, ch. 500, § 7, 32 Stat. 97 (U. S. Comp. St. Supp. 1907, p. 649) 254
1902, May 9, ch. 784, § 2, 32 Stat. 194 (U. S. Comp. St. Supp. 1907, p. 636) 533

REVISED STATUTES.

§§ 441, 463 (U. S. Comp. St. 1901, pp. 252, 262) 653
§§ 566, 649, 700 (U. S. Comp. St. 1901, pp. 461, 525, 570) 249
§§ 812, 1024 (U. S. Comp. St. 1901, pp. 627, 720) 532
§ 1025 (U. S. Comp. St. 1901, p. 720) 533, 562
§§ 2058, 2149 653
§ 3244 (U. S. Comp. St. 1901, p. 2096) 296
§ 3248 (U. S. Comp. St. 1901, p. 2107) 512
§§ 3287, 3318, 3323 (U. S. Comp. St. 1901, pp. 2130, 2164, 2167)..... 296
§ 3477 (U. S. Comp. St. 1901, p. 2320) 657
§§ 3929, 4041. Amended by Act 1890, Sept. 19, ch. 908, §§ 2, 3, 26 Stat. 466; Act 1895, March 2, ch. 191, § 4, 28 Stat. 964 (U. S. Comp. St. 1901, pp. 2686, 2688, 2749).. 332
§ 4898 (U. S. Comp. St. 1901, p. 3387) 110
§ 5392 (U. S. Comp. St. 1901, p. 3653) 562
§ 5430 (U. S. Comp. St. 1901, p. 3671) 252

COMPILED STATUTES 1901.

Pages 252, 262 653
Pages 461, 525 249
Page 550 2
Page 570 249
Pages 624, 627 532
Page 720 ..... 532, 533, 562
Page 1412 224
Page 1542 53
Page 1545 ..... 405, 562
Page 1547 405
Pages 1670, 1675 107
Page 2096 296
Page 2107 512
Pages 2130, 2164, 2167 296
Page 2228 532
Pages 2229, 2230, 2232 533
Pages 2307, 2308 254
Page 2320 657
Pages 2686, 2688, 2749 332
Page 2882 266
Page 2883 ..... 58, 665
Pages 3164, 3172 23
Page 3387 110
Page 3424 ..... 104, 554
Page 3430 306
Page 3432 99
Page 3450 85

Digitized by Google

Page 3451 633
Page 3653 562
Page 3671 252

COMPILED STATUTES SUPP. 1907.

Page 636 533
Page 649 254

TREATIES.

With Blackfeet Indians, May 1, 1888, ch. 213, 25 Stat. 124 647

ALABAMA.

CODE 1896.

§§ 25–27 34

ALASKA.

CIVIL CODE.

§§ 262, 263, 265, 270 277

ARKANSAS.

KIRBY'S DIGEST.

§ 6607 619

LAWS.

1881, p. 63 ..... 473, 474

GEORGIA.

CIVIL CODE 1895.

§ 4904 1

HAWAII.

REVISED LAWS 1905.

§§ 506, 2358, 2380 349

LAWS.

1905, No. 23, §§ 1–4 349

IDAHO.

REVISED STATUTES 1887.

§ 3184 207

INDIAN TERRITORY.

See Oklahoma.

KANSAS.

GENERAL STATUTES 1889.

§ 1251 230

MASSACHUSETTS.

REVISED LAWS 1902.

Ch. 1, § 7 341

MISSOURI.

REVISED STATUTES 1899.

§ 413 (Ann. St. 1906, p. 501) 574
§ 3616 (Ann. St. 1906, p. 2034) 445
§ 4151 (Ann. St. 1906, p. 2250) 548
§§ 6433, 6434 (Ann. St. 1906, pp. 3217, 3218) 547

ANNOTATED STATUTES 1906.

§ 413 574
§ 3616 445
§ 4151 548
§§ 6433, 6434 547

NEW JERSEY.

LAWS.

1896, p. 281, §§ 12, 13 167

OKLAHOMA.

STATUTES 1893.

§ 5196 297

MANSFIELD'S DIGEST.

§§ 2240, 2247 (Ind. T. Ann. St. 1899, §§ 1583, 1590) 273
§ 4478 (Ind. T. Ann. St. 1899, § 2945) 236

INDIAN TERRITORY ANNOTATED STATUTES 1899.

§§ 1583, 1590 273
§ 2945 236

PENNSYLVANIA.

LAWS.

1851, p. 674, § 19 602
1855, p. 309 602
1874, p. 81, § 17 482
1901, p. 88, § 1 20

TENNESSEE.

SHANNON'S CODE.

§§ 1574, 1575 414

WASHINGTON.

REVISED CODE 1881.

§ 2939. Repealed by Laws 1893, p. 385, ch. 124, § 137 182

BALLINGER'S ANNOTATED CODES & STATUTES.

§ 5521 (Pierce's Code, § 1156) 182

PIERCE'S CODE.

§ 1156 (Ballinger's Ann. Codes & St. § 5521) 182

LAWS.

1893, p. 385, ch. 124, § 137 182

WISCONSIN.

STATUTES 1898.

§ 1774 367

Digitized by Google

STAY.

Pending appeal or writ of error, see Appeal and Error, § 4.

STEAM.

In an action for injuries sustained through a boiler explosion, where the gravamen of the charge was that the defendant had negligently failed to exercise reasonable care in maintaining the boiler in a reasonably safe condition, evidence of recurring explosions, not otherwise explained, occurring in the course of its prior use, when the conditions were substantially the same, was admissible as bearing upon its tendency to become impaired by the particular use to which it was subjected, the defendant's knowledge of that tendency, and the precautions which, in the exercise of reasonable or ordinary care, should have been taken thereafter in inspecting and testing it to determine whether it was in reasonably safe condition for use; but such evidence was not admissible for any other purpose.
—Chicago Great Western Ry. Co. v. McDonough, 161 Fed. 657..... 88 C. C. A. 517

Evidence of the condition, shortly after an accident, of the instrumentality which caused it, is admissible as bearing upon its condition at the time of the accident, or just prior thereto, when it appears that there has been no intervening change.
—Chicago Great Western Ry. Co. v. McDonough, 161 Fed. 657..... 88 C. C. A. 517

STOCK.

Corporate stock, see Corporations, § 1.

STOCKHOLDERS.

Of corporations, see Corporations, § 2.

STREET RAILROADS.

Carriage of passengers, see Carriers; Railroads.

STREETS.

See Municipal Corporations, § 1.

SUBROGATION.

A railroad company having become indebted on certain notes, bonds to the amount of $60,000 were placed in the hands of C., as trustee, to secure the payment of the notes. Thereafter C. paid the indebtedness, took up the notes, and afterwards, on the foreclosure of the mortgage, received the pro rata of $19,000, leaving a balance of $12,000 still due. *Held*, that C. by paying the notes became subrogated to the rights of the creditors against the bonds, on which he had a valid lien for the balance of the debt until payment; and hence the bonds, while subject to such lien, were not deliverable to C. and another under contract for the sale of the bonds of the railway company by the owner.
—Cobb v. Crittenden, 161 Fed. 510.....88 C. C. A. 452

Digitized by Google

TARIFF.

See Customs Duties.

TAXATION.

See Customs Duties; Internal Revenue.
Tax title to support action for trespass, see Trespass, § 1.

§ 1. Sale of land for nonpayment of tax.

The overdue tax suit for the foreclosure of a tax lien, authorized by Acts Ark. 1881, p. 63, is a judicial proceeding, and the sale pursuant thereto is a judicial sale.

—Indiana & Arkansas Lumber & Mfg. Co. v. Milburn, 161 Fed. 531 88 C. C. A. 473

A sale of land for taxes pursuant to a decree in an overdue tax suit, authorized by Acts Ark. 1881, p. 63, vests no title in the purchaser until confirmation.

—Indiana & Arkansas Lumber & Mfg. Co. v. Milburn, 161 Fed. 531 88 C. C. A. 473

After various decrees and orders, and vacations thereof, in proceedings for the sale of land for the nonpayment of taxes, it appeared that the money paid by the purchasers had been distributed and was beyond their reach; and, the purchasers having neither money nor deeds to the land, a chancery court directed the commissioner to make a statement showing his disposition of the proceeds, and, this being done, confirmed the report of sales and ordered the commissioner to execute deeds to purchasers, conveying only such title as the decree or decrees were competent to pass. *Held*, that such order only confirmed sales of lands made to individuals, and did not apply to lands struck off to the state.

—Indiana & Arkansas Lumber & Mfg. Co. v. Milburn, 161 Fed. 531 88 C. C. A. 473

§ 2. Tax titles.

In a bill to set aside a tax title, which sets out the proceedings for selling the property, and alleges their invalidity, a statement that a deed was issued, "whereby and by the terms of which said county treasurer granted and conveyed" the property to the grantee, cannot be construed as an admission that the title passed by such deed.

—Kraus v. Congdon, 161 Fed. 18.....88 C. C. A. 182

In a suit under Ballinger's Ann. Codes & St. Wash. § 5521 (Pierce's Code, § 1156), by one in possession of lands, to set aside a tax title thereon, plaintiff is not required to plead title in himself, nor to prove it even if alleged.

—Kraus v. Congdon, 161 Fed. 18.....88 C. C. A. 182

Code Wash. 1881, § 2939, limiting the time for bringing suits to recover lands sold for taxes to three years, was a part of Act Dec. 1, 1881, "to provide for the assessment and collection of county and territorial revenue," and was repealed by Act March 15, 1893, p. 385, c. 124, § 137, which expressly repeals "all acts and parts of acts heretofore enacted by the Legislature of the territory or state of Washington providing for the assessment and collection of taxes in this state."

—Kraus v. Congdon, 161 Fed. 18.....88 C. C. A. 182

Misdescriptions of land, which would be fatal to an ordinary tax proceeding, do not render a sale pursuant to a judgment in an overdue tax suit, authorized by Acts Ark. 1881, p. 63, invalid after confirmation.

—Indiana & Arkansas Lumber & Mfg. Co. v. Milburn, 161 Fed. 531 88 C. C. A. 473

Digitized by Google

An attack on the sale of land under a decree in an overdue tax suit is barred by the five-year statute of limitations prescribed by Kirby's Dig. Ark. § 5060.
—Indiana & Arkansas Lumber & Mfg. Co. v. Milburn, 161 Fed. 531 88 C. C. A. 473

The statute of limitations does not commence to run in favor of a purchaser's title to land purchased pursuant to a decree in an overdue tax suit, authorized by Acts Ark. 1881, p. 63, until confirmation of the sale.
—Indiana & Arkansas Lumber & Mfg. Co. v. Milburn, 161 Fed. 531 88 C. C. A. 473

Where land in controversy was wild and uncultivated, and neither complainants, the fee owners, nor the defendants, claiming under a tax sale made in 1881, were in possession, and defendants, aside from paying taxes, did nothing with reference to the land from a sense of security caused by complainants' inactivity, complainants were not barred by laches for maintaining a suit to quiet title as against defendants' alleged claim.
—Indiana & Arkansas Lumber & Mfg. Co. v. Milburn, 161 Fed. 531 88 C. C. A. 473

Where defendants had paid taxes on land purchased at a tax sale for many years, complainants were only entitled to a decree setting aside such sale on condition that they reimburse defendants for the tax payments so made.
—Indiana & Arkansas Lumber & Mfg. Co. v. Milburn, 161 Fed. 531 88 C. C. A. 473

TERMS.

Of leases, see Landlord and Tenant, § 1.

TIME.

For allowance of bill of exceptions, see Exceptions, Bill of, § 1.
For discharge of cargo, see Shipping, § 2.
Of passing of title to property taken for public use, see Eminent Domain, § 3.

TITLE.

Removal of cloud, see Quieting Title.
Tax titles, see Taxation, § 2.

Particular matters affecting title.

See Eminent Domain, § 3.

Particular species of property or rights.

See Patents, § 4; Public Lands, § 2; Trade-Marks and Trade-Names, § 2.

TORTS.

Computation of period of limitation, see Limitation of Actions, § 1.

Liabilities of particular classes of persons.

Employés, see Master and Servant, § 3.

Digitized by Google

Particular torts.

See Libel and Slander; Negligence; Trespass; Trover and Conversion.
Causing death, see Death, § 1.
Maritime torts, see Collision.

Remedies for torts.

See Trespass, § 1; Trover and Conversion, § 1.

When several persons unite in an act which constitutes a wrong to another, intending at the time to commit the act under circumstances which fairly charge them with intending the consequences which follow, they are all jointly and severally liable for the wrong done, regardless of their individual participation in its accomplishment or their individual gain or profit resulting therefrom.
—Clay v. Waters, 161 Fed. 815; Boatright v. Same, Id..... 88 C. C. A. 633

TOWAGE.

Collisions with tugs and vessels in tow, see Collision, § 3.

A finding affirmed that a tug was liable for damages resulting from the stranding of a barge which she was towing from anchorage in New Haven Harbor, and that the evidence did not sustain the defense that the barge struck an unknown obstruction on the anchorage grounds, but rather indicated that through an error of the master the tug and tow were outside the dredged basin used as the anchorage grounds.
—The Resolute, 160 Fed. 659.....88 C. C. A. 17

TOWNS.

See Counties; Municipal Corporations.

TRADE-MARKS AND TRADE-NAMES.

§ 1. **Marks and names subjects of ownership.**

Where complainant manufactured and sold a cigar mold under a patent, and adopted the name "Vertical Top" to designate such mold alone in its literature, catalogues, etc., which it used during the life of the patent, on its expiration the name, as well as the article, became free to the public, and complainant could not perpetuate its exclusive right thereto by registering it as a trade-mark.
—Sternberg Mfg. Co. v. Miller, Du Brul & Peters Mfg. Co., 161 Fed. 318 .....88 C. C. A. 398

On the expiration of the copyright on the name "Webster," used in connection with dictionaries, the name became public property; though such name as applied to the dictionary published by the owner of the copyright had acquired a secondary meaning, indicating a particular book published and sold by such owner.
—G. & C. Merriam Co. v. Ogilvie, 159 Fed. 638.....88 C. C. A. 596

The right to use a copyrighted name upon the expiration of the copyright becomes public property, subject to the limitation that the right shall be so exercised as not to deceive members of the public and lead them to believe that they are buying the particular thing which was produced under the copyright.
—G. & C. Merriam Co. v. Ogilvie, 159 Fed. 638.....88 C. C. A. 596

§ 2. **Title, conveyances, and contracts.**

The right of defendants to use in their trade the words "Old Crow," or "Crow," as applied to whisky, could not be measured by the extent to

Digitized by Google

which they employed it, it being sufficient, to protect them from a charge of infringement of plaintiff's alleged monopoly of such term as a trade-mark, that defendants used the same in connection with their business as whisky dealers prior to any appropriation thereof by complainant, and continued so to use it; nor could defendants' right to use it ad libitum be destroyed by the greater amount of complainant's sales under the designation of "Old Crow," or by the asserted superiority of complainant's product.

—Kahn v. W. A. Gaines & Co., 161 Fed. 495.....88 C. C. A. 437

§ 3. **Infringement and unfair competition.**

Complainant's president, having built up a business in the manufacture of artificial legs under his own name, which were widely known as "Rowley" legs, transferred his business and good will to complainant, after which defendant, whose name was also Rowley, embarked in the same business, and advertised himself as manufacturing "Rowley" artificial legs. *Held*, that an injunction restraining defendant from any use of the name "Rowley" in the manufacture of artificial limbs was too broad, and should have been limited to the use of the name without some explanation which would prevent deception.

—Rowley v. J. F. Rowley Co., 161 Fed. 94.....88 C. C. A. 258

While every man is entitled to use his own name in connection with his business, equity will not permit its use in such a manner as to perpetrate a fraud.

—Rowley v. J. F. Rowley Co., 161 Fed. 94.....88 C. C. A. 258

Evidence *held* to entitle complainant to an injunction restraining defendant from unfair competition in making and selling a cigar mold designated by the same name as one made by complainant, and in using similar cuts in its catalogues representing cigar maker's tools, without stamping its name upon such molds and plainly indicating on the cuts that it, and not complainant, was the manufacturer of the articles represented thereby.

—Sternberg Mfg. Co. v. Miller, Du Brul & Peters Mfg. Co., 161 Fed. 318 .....88 C. C. A. 398

Where, in an action for infringement of complainant's right to the use of the terms "Crow" and "Old Crow" as a name for whisky and for unlawful competition, complainant claimed that defendants' whisky sold under such brand was fraudulent, impure, and deleterious, the record and evidence in a prior case brought by complainant for infringement of its trade-mark, to which defendant was not a party, while inadmissible as proof of the issues on trial, was competent for the information of the chancellor as to the scope of the decision in the prior case as a precedent.

—Kahn v. W. A. Gaines & Co., 161 Fed. 495.....88 C. C. A. 437

In an action for infringement of plaintiff's alleged trade-mark and for unlawful competition, evidence *held* insufficient to show that defendants' whisky, sold under the name of "Old Crow," or "Crow," in competition with plaintiff's whisky, sold under the same name, was deleterious or fraudulent, or that defendant was guilty of unfair competition in the use of such names.

—Kahn v. W. A. Gaines & Co., 161 Fed. 495.....88 C. C. A. 437

In order to entitle complainant to relief in a suit for unlawful competition, it is not necessary that the public should be actually deceived; it being sufficient that the infringement had a tendency to deceive.

—O'Connell v. National Water Co., 161 Fed. 545.....88 C. C. A. 487

Defendant's copyright on the name "Webster," as used in the title of dictionaries, having expired, complainant published dictionaries bearing that name, with the evident purpose of leading the public into supposing that they were buying Webster's Dictionary as improved by defendant. Important work of Noah Porter for defendant is prominently referred to in defendant's title pages. Complainant's title page reads, "Being the authentic unabridged dictionary of Noah Webster, LL. D. * * * pre-

Digitized by Google

pared under the direction of Noah Porter." On the backs of some of his publications defendant printed "The latest complete authentic Webster's Dictionary," the word "authentic" being plainly borrowed from the backs of complainant's publications. *Held* that, though defendant printed his name on the back or cover and on the title page of his dictionaries, and used "Imperial" and "Universal" in the title, and not "International," as used by complainant, he was guilty of unfair competition.
—G. & C. Merriam Co. v. Ogilvie, 159 Fed. 638.....88 C. C. A. 596

The presence of an inequitable purpose is an element of great weight in determining a question of fairness in trade.
—G. & C. Merriam Co. v. Ogilvie, 159 Fed. 638.....88 C. C. A. 596

Where one avails himself of the principle of public dedication of a name, he must in good faith fully identify his production, and clearly disassociate it from that of one who has given significance to the name, and sufficiently direct the mind of the trading public to the fact that, though the thing is of the same name, it is something produced and put upon the market by himself.
—G. & C. Merriam Co. v. Ogilvie, 159 Fed. 638.....88 C. C. A. 596

The copyright on "Webster's Unabridged Dictionary" having expired, a competing publisher of "Webster's Dictionary" or "Webster's Imperial Dictionary" may be enjoined by the original publisher from issuing misleading and deceptive circulars and advertisements which show an intention to trespass upon the reputation of the original publishers, and deceive purchasers into buying the competing publisher's dictionary, on the supposition that it is one of the series published by the original publisher.
—G. & C. Merriam Co. v. Ogilvie, 159 Fed. 638.....88 C. C. A. 596

A publisher, whose copyright on the name "Webster" as used in connection with dictionaries has expired, may be enjoined by a competing publisher of dictionaries from issuing circulars to the effect that it has the exclusive right to use the name in such connection.
—G. & C. Merriam Co. v. Ogilvie, 159 Fed. 638.....88 C. C. A. 596

TRADE-MARKS AND TRADE-NAMES ADJUDICATED.

"Crow."—Kahn v. W. A. Gaines & Co. 437
"Old Crow."—Kahn v. W. A. Gaines & Co. 437
"Rowley."—Rowley v. J. F. Rowley Co. 258
"Vertical Top."—Sternberg Mfg. Co. v. Miller, Du Brul & Peters Mfg. Co. 398
"Webster."—G. & C. Merriam Co. v. Ogilvie 596
"Webster's Dictionary."—G. & C. Merriam Co. v. Ogilvie..... 596
"Webster's Imperial Dictionary."—G. & C. Merriam Co. v. Ogilvie 596
"Webster's Unabridged Dictionary."—G. & C. Merriam Co. v. Ogilvie 596

TRANSCRIPTS.

Of record for purpose of review, see Appeal and Error, § 5.

TREES.

See Woods and Forests.

TRESPASS.

On public lands, see Public Lands, § 1.

§ 1. Actions.

An invalid tax deed does not give the holder constructive possession of the property, so as to render another who enters upon and takes actual

Digitized by Google

possession of it a trespasser, nor does the continued payment of taxes thereon by the holder of such deed.
—Kraus v. Congdon, 161 Fed. 18.....88 C. C. A. 182

TRIAL.

See Witnesses.

Proceedings incident to trials.

See Continuance.

Trial of particular civil actions or proceedings.

See Negligence, § 3.
For death caused by operation of railroad, see Railroads, § 3.
For injuries to person on city street, see Municipal Corporations, § 1.
Suits in equity, see Equity, § 4.
Suits to try tax titles, see Taxation, § 2.

Trial of criminal prosecutions.

See Criminal Law, § 3.

§ 1. **Reception of evidence.**
Upon a motion to strike out all evidence relating to a specified subject, some of which is unobjectionable, the court, while at liberty to select or separate what is objectionable from what is unobjectionable, and to strike out the former, is not obliged to do so, but may respond to the motion in the terms in which it is made.
—Chicago Great Western Ry. Co. v. McDonough, 161 Fed. 657.....
88 C. C. A. 517

§ 2. **Taking case or question from jury.**
Where there is any positive evidence tending to establish a material fact in issue, the court is not justified in withdrawing such issue from the jury.
—Southern Ry. Co. v. Hopkins, 161 Fed. 266.....88 C. C. A. 312

§ 3. **Instructions to jury.**
Where a request for an instruction contains two or more propositions of law, one of which is unsound, there is no error in a refusal to grant it.
—Armour & Co. v. Kollmeyer, 161 Fed. 78.....88 C. C. A. 242

In an action against a railroad company to recover for the death of a conductor alleged to have resulted from a defect in a car from which he undertook to dismount while it was moving, an instruction that, in the absence of any proof to the contrary it would be presumed that he attempted to dismount for some reason essential to the performance of his duty, was erroneous as invading the province of the jury; the question of contributory negligence being one of fact for their determination.
—Southern Ry. Co. v. Hopkins, 161 Fed. 266.....88 C. C. A. 312

The rule that affirmative testimony is to be preferred to negative is not absolute, and whether or not in any particular case it shall be called to the attention of the jury is so largely in the discretion of the trial judge that the refusal to do so is not ordinarily reversible error.
—Chicago Great Western Ry. Co. v. McDonough, 161 Fed. 657.....
88 C. C. A. 517

A general exception to a considerable portion of the charge cannot be regarded as presenting a specific objection to a lesser portion, which in fairness to the trial court should have been specially called to its attention, in order that the appropriate correction might be made.
—Chicago Great Western Ry. Co. v. McDonough, 161 Fed. 657.....
88 C. C. A. 517

In examining the charge, for the purpose of ascertaining its correctness in point of law, the whole scope and bearing of it must be taken

Digitized by Google

together. It is wholly inadmissible to take up single or detached passages, and to decide upon them without attending to the context, or without incorporating such qualifications and explanations as naturally flow from the language of other parts.

—Chicago Great Western Ry. Co. v. McDonough, 161 Fed. 657..... 88 C. C. A. 517

§ 4. Trial by court.

When the trial is to the court, under Rev. St. § 649 (U. S. Comp. St. 1901, p. 525), the finding may be either general or special, but not both, and, where a general finding is made and judgment is rendered thereon, it cannot be regarded as superseded by a supposed special finding, which was not entered of record, is only found in the bill of exceptions, and does not purport to qualify or take the place of the general finding.

—United States v. Cleage, 161 Fed. 85.....88 C. C. A. 249

TROVER AND CONVERSION.

§ 1. Actions.

The payment of a judgment in conversion vests the title to the property converted in the defendant as of the date of the conversion, as between the parties, but not as against a third claimant of the property, to whom the defendant voluntarily surrendered it after the conversion and before the judgment.

—Third Nat. Bank v. Rice, 161 Fed. 822.....88 C. C. A. 640

TRUST DEEDS.

See Mortgages.

TRUSTEE.

In bankruptcy, see Bankruptcy, § 2.

TRUSTS.

Affecting rights in public lands, see Public Lands, § 2.

§ 1. Creation, existence, and validity.

Where a surety which agreed to advance money in connection with the purchase of certain mining property by the principal, for which it was bound as surety, and in a certain contingency was to receive a conveyance of such property, to operate the same, account for the proceeds, and, when reimbursed, to reconvey to its principal, by refusing to make agreed payments caused the property to be resold and obtained the title from the court, it took and held the same as a trustee only, and was subject to a suit by the principal for an accounting, and to enforce the trust in accordance with the agreement.

—Smith v. United States Fidelity & Guaranty Co., 162 Fed. 15.... 88 C. C. A. 669

§ 2. Construction and operation.

A bequest to executors, in trust to pay the income to a son until such time as they think proper to pay him the principal, is valid, and the son is not entitled to demand the principal immediately, or on reaching his majority.

—Ballantine v. Ballantine, 160 Fed. 927.....88 C. C. A. 109

§ 3. Management and disposal of trust property.

Defendant contracted to sell a vessel to a steamship company, which being indebted to complainant, it was agreed that defendant should transfer the vessel to the steamship company, take a mortgage covering, first,

Digitized by Google

the remainder of the purchase price, and, second, the indebtedness due complainant, evidenced by a note executed by the steamship company to defendant as trustee. The bill of sale of the vessel was never in fact delivered, nor was the mortgage executed. Thereafter defendant, without notifying complainant or giving him any opportunity to protect his interest, which he was able to do, executed mutual releases with the steamship company, and with K., the moneyed man of that concern, formed another corporation, to which the vessel was conveyed; the steamship company going out of business. Defendant received of the stock of the new company an amount equal to the amount remaining due on the vessel; K. receiving an amount equal to cash contributions which he made, necessary to free the vessel from liens for indebtedness incurred by the steamship company. *Held*, that such transaction constituted a breach of trust on defendant's part, rendering it liable to complainant for the amount of its debt against the steamship company.
—Frank Waterhouse & Co. v. Dodge, 162 Fed. 1.....88 C. C. A. 374

§ 4. **Establishment and enforcement of trust.**
Defendant contracted to sell a vessel to a steamship company, which being indebted to complainant, it was agreed that defendant should transfer the vessel to the steamship company, take a mortgage covering, first, the remainder of the purchase price, and, second, the indebtedness due complainant, evidenced by a note executed by the steamship company to defendant as trustee. The bill of sale of the vessel was never in fact delivered, nor was the mortgage executed. Thereafter defendant, without notifying complainant, or giving him any opportunity to protect his interest, which he was able to do, executed mutual releases with the steamship company and with K., the moneyed man of that concern, formed another corporation to which the vesesl was conveyed; the steamship company going out of business. Defendant received on the stock of the new company an amount equal to the amount remaining due on the vessel; K. receiving an amount equal to cash contributions which he made, necessary to free the vessel from liens for indebtedness incurred by the steamship company. *Held*, that the steamship company was not an indispensable party to a suit by complainant against defendant for breach of trust.
—Frank Waterhouse & Co. v. Dodge, 162 F. 1.....88 C. C. A. 374

An insurance corporation issued a large number of policies, by which, in consideration of the payment of premiums during a fixed term, it contracted to pay a certain sum to each policy holder at the end of such term, together with an equitable portion of a profit fund to be made up from gains and profits from lapses and other sources. While such policies were outstanding, the company transferred its assets to another company disenabling itself from performing its contracts and went out of business. Its successor, after issuing similar policies, transferred its assets to a third, and the third to a fourth company. The holders of policies in the transferring companies joined in a bill in equity for some form of relief with respect to the assets transferred as a trust fund. *Held*, that such bill being for the enforcement of a trust, and not a creditor's bill, it was not essential that the claims of complainants should first be reduced to judgment against the companies issuing the policies.
—Watson v. National Life & Trust Co., 162 F. 7.....88 C. C. A. 380

An insurance corporation issued a large number of policies, by which, in consideration of the payment of premiums during a fixed term, it contracted to pay a certain sum to each policy holder at the end of such term, together with an equitable portion of a profit fund to be made up from gains and profits from lapses and other sources. While such policies were outstanding, the company transferred its assets to another company, disenabling itself from performing its contracts, and went out of business. Its successor, after issuing similar policies, transferred its assets to a third, and the third to a fourth company. The holders of policies in the transferring companies joined in a bill in equity for some form of relief with respect to the assets transferred as a trust fund. *Held*, as

Digitized by Google

one part of the relief prayed for related to funds deposited by some of the companies with a state auditor, the auditor was an indispensable party in so far as that aspect of the bill was concerned, but his absence would not prevent the granting of relief to which complainants might be entitled with respect to the funds in the hands of defendants, nor render the bill subject to demurrer.
—Watson v. National Life & Trust Co., 162 F. 7....88 C. C. A. 380

TUGS.

See Towage.

ULTRA VIRES.

Acts of corporation, see Corporations, § 3.

UNFAIR COMPETITION.

See Trade-Marks and Trade-Names, § 3.

UNITED STATES.

See Customs Duties; Post Office.
Courts, see Courts, §§ 2, 3.
Indians, see Indians.
Public lands, see Public Lands, § 2.

VACATION.

Of judicial sale, see Judicial Sales.

VARIANCE.

Between pleading and proof in criminal prosecutions, see Indictment and Information, § 3.

VENDOR AND PURCHASER.

See Sales.
Purchasers at foreclosure of railroad mortgage, see Railroads, § 1.
Purchasers at tax sale, see Taxation, § 2.
Specific performance of contract, see Specific Performance.

VERDICT.

Review on appeal or writ of error, see Appeal and Error, § 7.

VICE PRINCIPALS.

See Master and Servant, § 2.

VILLAGES.

See Municipal Corporations.

Digitized by Google

WAGES.

Of seamen, see Seamen.

WAIVER.

See Estoppel.
Of objections to particular acts or proceedings, see Criminal Law, § 3.
Forfeiture of insurance, see Insurance, § 3.

WARRANT.

County warrants, see Counties, § 1.

WATERS AND WATER COURSES.

See Navigable Waters.
Computation of period of limitations applicable to action for injuries from flowage, see Limitation of Actions, § 1.
Effect of transfer of cause on appeal in suit to restrain diversion of waters, see Appeal and Error, § 3.

§ 1. Appropriation of rights in public lands.
The general government has power to reserve the waters on the public domain and exempt them from appropriation under state laws.
—Conrad Inv. Co. v. United States, 161 Fed. 829...88 C. C. A. 647

§ 2. Appropriation and prescription.
The right to appropriate water from a stream is not an unrestricted right, but must be exercised with regard to the rights of the public and other appropriators, and a single appropriator who has adopted as a means of raising water to his land water wheels operated by the current of the stream has no right of action because of the construction of a dam below him designed for the irrigation of a large area of land, the property of many owners, which destroys the current of the stream at the place of his location, and makes it necessary for him to adopt some other means of diverting the water off his land.
—Schodde v. Twin Falls Land & Water Co., 161 Fed. 43.....
88 C. C. A. 207

Rev. St. Idaho 1887, § 3184, which provides that owners of lands adjacent to a stream shall "have the right to place in the channel of, or on the banks or margin of, the same rams or other machines for the purpose of raising the waters thereof to a level above the banks requisite for the flow thereof to and upon such adjacent lands," gives a mere license to use an appropriate method for raising the water, but the particular method or means adopted does not attach as an appurtenance to the appropriation of the water as against other appropriators from the same stream.
—Schodde v. Twin Falls Land & Water Co., 161 Fed. 43.....
88 C. C. A. 207

An appropriator of a certain quantity of water from a stream does not acquire as an appurtenant to his water location the right to the current of the stream as a means of operating devices used by him to divert the water from the stream, nor is such current subject to appropriation as a water right under the Constitution and laws of Idaho.
—Schodde v. Twin Falls Land & Water Co., 161 Fed. 43.....
88 C. C. A. 207

Digitized by Google

Where the Indians on the Blackfeet reservation had a prior right to the use of the waters of Birch creek for irrigation to that of defendant, which had acquired by appropriation and purchase large quantities of land adjacent to the creek, which it had proceeded to irrigate by means of canals and a dam in the creek, a decree restraining defendant from obstructing the waters of the creek to the extent of 1,666⅔ inches from flowing down the channel to points of diversion for the benefit of the Indians on the reservation, and providing that the amount of water in excess of that specified in the decree should be subject to the subsequent order of the court, was proper.

—Conrad Inv. Co. v. United States, 161 Fed. 829...88 C. C. A. 647

In trespass by the United States for the benefit of the residents of the Blackfeet Indian reservation for the taking of the waters of Birch creek to the prejudice of the Indians, settlers who had taken up land on the faith of contracts with defendant to furnish them water, and whose rights were derived solely from defendant, were not necessary parties.

—Conrad Inv. Co. v. United States, 161 Fed. 829...88 C. C. A. 647

WAYS.

Public ways, see Municipal Corporations, § 1.

WELLS.

Oil or gas wells, see Mines and Minerals, § 2.

WHARVES.

Respondent, as contractor, was constructing the piers of a steamship company at Hoboken to replace others which had burned, and had contracted with libelant to furnish crushed stone delivered on scows. The new piers were not in the same place as the old, and respondent had removed all stubs of the old piles extending above low water, while an independent contractor had dredged the bottom, and supposedly removed all those below. By agreement libelant left scows loaded with stone which was to be used by respondent during the winter, and respondent caused one of them to be removed from one side of a slip to the other, and there tied up to one of the new piers, where others were also made fast. A strong wind from the west caused an unusual fall of the tide, and as such scow settled she was pierced by the stub of an old pile and injured. The place alongside the pier had been used during the work with safety, and respondent had caused it to be dragged for obstructions. *Held*, that the liability of respondent was not that of a wharf owner, the piers being unfinished and not in commercial use, but that its duty was only to exercise due care, and that under the facts shown it did not fail in such duty and was not liable for the injury, which was chargeable to an accident not reasonably to be anticipated.

—Conklin v. R. P. & J. H. Staats Co., 161 Fed. 897..88 C. C. A. 593

WILLS.

See Executors and Administrators.
Construction and execution of trusts, see Trusts.
Legacy, inheritance, or transfer taxes, see Internal Revenue.

Digitized by Google

WITNESSES.

See Evidence.
Experts, see Evidence, § 2.
Opinions, see Evidence, § 2.
Perjury, see Perjury.

§ 1. **Competency.**
On the trial of a criminal case, the admission of the testimony of the divorced wife of defendant as to the contents of a lost paper, which had been handed to her by defendant while she was still his wife, during a consultation between them and others relating to matters out of which the prosecution arose, was not reversible error, where it did not appear from the record that the communication was confidential, or that the paper was not read by the others present.
—Jacobs v. United States, 161 Fed. 694.....88 C. C. A. 554

§ 2. **Examination.**
The sustaining of an objection to a question asked on cross-examination of a witness, relating to a matter gone into only on such cross-examination, *held* not error.
—Grand Trunk Western Ry. Co. v. Reddick, 160 Fed. 898.....88 C. C. A. 80

The rule applied that under the federal practice, permitting the re-examination of witnesses in a criminal case with respect to matters not brought out in cross-examination is within the discretion of the trial court.
—Jacobs v. United States, 161 Fed. 694.....88 C. C. A. 554

§ 3. **Credibility, impeachment, contradiction, and corroboration.**
On the trial of a bankrupt for a criminal offense, it was error to permit the prosecuting attorney, on the cross-examination of defendant as a witness, to read from a copy of his examination before the referee in the bankruptcy proceedings, and to interrogate him thereon for the purpose of impeachment, under Bankr. Act July 1, 1898, § 7a (9), c. 541, 30 Stat. 548 (U. S. Comp. St. 1901, p. 3424).
—Jacobs v. United States, 161 Fed. 694.....88 C. C. A. 554

WOODS AND FORESTS.

Where defendant drove large bands of cattle into a 320-acre pasture which was inclosed on three sides, but open on the side toward a public forest reserve, knowing that there was no water in the pasture, and that it was insufficient to sustain the cattle, and that they must, of necessity, drift onto the reserve for pasture and water, defendant could not claim freedom from responsibility for the cattle trespassing on the reserve because he at no time drove them there, and because the reserve was not inclosed.
—Shannon v. United States, 160 Fed. 870.....88 C. C. A. 52

The creation of a forest reserve severs the reserved land from the public domain, and appropriates it to public use so that it is no longer subject to the implied license to pasture on public lands.
—Shannon v. United States, 160 Fed. 870.....88 C. C. A. 52

The rules promulgated by the Secretary of the Interior regulating the number of cattle and other live stock that may be pastured on a forest reserve, and the manner in which the owners may obtain permission to use the reservation for that purpose, are reasonable and within the power granted by Act Cong. June 4, 1897, c. 2, 30 Stat. 34 (U. S. Comp. St. 1901, p. 1542), giving the Secretary of the Interior power to make rules and reg-

Digitized by Google

ulations, and establish such service as will insure the objects of such reservations, namely, to regulate their occupancy and use, and to preserve the forests from destruction.
—Shannon v. United States, 160 Fed. 870.....88 C. C. A. 52

WRITS.

Particular writs.

See Injunction; Mandamus; Replevin.
Writ of error, see Appeal and Error.

WRONGS.

See Torts.

YEAR.

Estates for years, see Landlord and Tenant.

[END OF VOLUME.]

6/1/09

Digitized by Google

Digitized by Google

Digitized by Google

Digitized by Google

Digitized by Google